BADHWAR RESIDENCE
12830 DEER CREEK LANE
LOS ALTOS HILLS , CALIFORNIA

LEGEND

EXISTING	PROPOSED	DESCRIPTION
		BOUNDARY
		PROPERTY LINE
		RETAINING WALL
		LANDSCAPE RETAINING WALL
	RW RW	RAINWATER TIGHTLINE
	SUB	SUBDRAIN LINE
	TL	TIGHTLINE
SD	SD	STORM DRAIN LINE
SS	SS	SANITARY SEWER LINE
W	W	WATER LINE
G	G	GAS LINE
P	P	PRESSURE LINE
JT	JT	JOINT TRENCH
		SET BACK LINE
		CONCRETE VALLEY GUTTER
		EARTHEN SWALE
CB	CB	CATCH BASIN
JB	JB	JUNCTION BOX
AD	AD	AREA DRAIN
SDMH	SDMH	CURB INLET
		STORM DRAIN MANHOLE
		FIRE HYDRANT
SSMH	SSMH	SANITARY SEWER MANHOLE
		STREET SIGN
222.57 INV	222.57 INV	SPOT ELEVATION
		FLOW DIRECTION
	D	DEMOLISH/REMOVE
		BENCHMARK
200	200	CONTOURS
	XX" TREE	TREE TO BE REMOVED
	TP	TREE PROTECTION FENCING

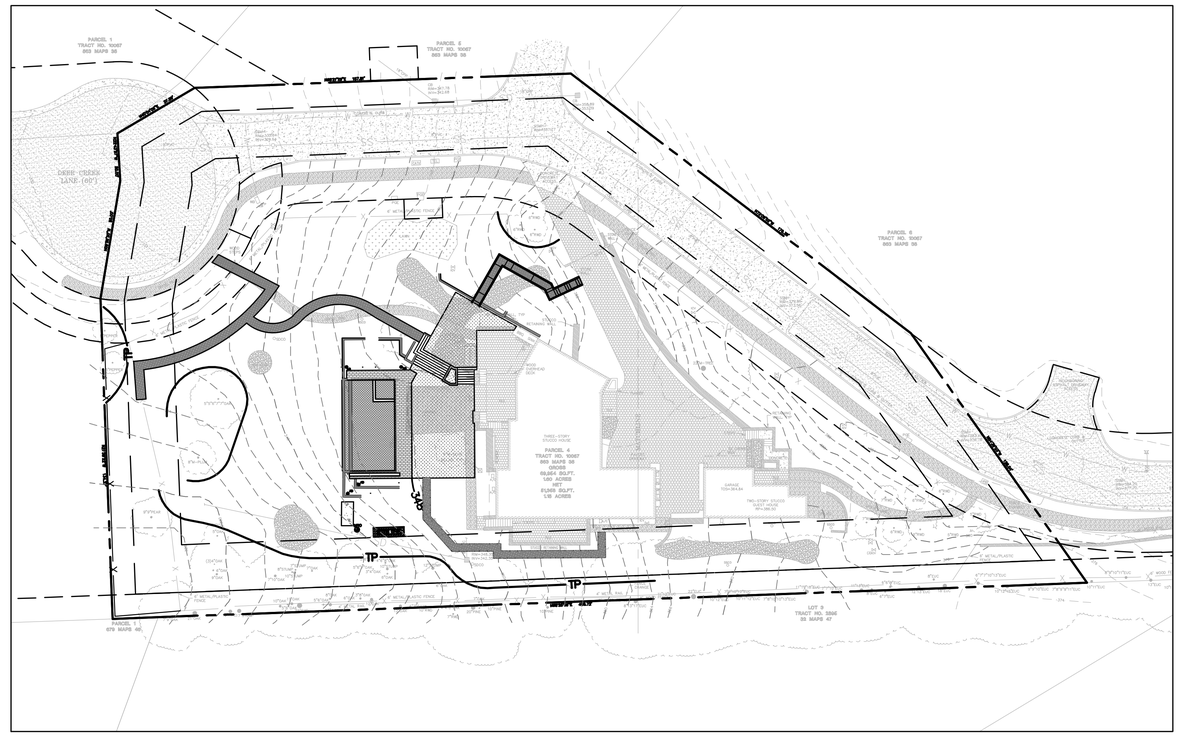

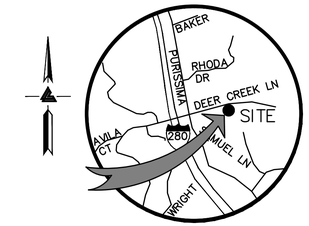

VICINITY MAP
NTS

OWNER'S INFORMATION

OWNER:
VARUN BADHWAR
12830 DEER CREEK LANE
LOS ALTOS HILLS, CA

APN: 175-43-050

REFERENCES

THIS GRADING AND DRAINAGE PLAN IS SUPPLEMENTAL TO:

1. TOPOGRAPHIC SURVEY BY LEA & BRAZE ENGINEERING, ENTITLED;
   "TOPOGRAPHIC SURVEY"
   12830 DEER CREEK LANE
   LOS ALTOS HILLS, CA
   DATED:10-07-19
   JOB# 2190941
2. SOIL REPORT BY GEOFORENSICS INC. ENTITLED:
   "GEOTECHNICAL INVESTIGATION"
   12830 DEER CREEK LANE
   LOS ALTOS HILLS, CA
   DATE: 03-13-2020
3. LANDSCAPE PLAN BY ARTISAN HOME RESORTS, ENTITLED
   ""LANDSCAPE PLAN
   12830 DEER CREEK LANE
   LOS ALTOS HILLS, CA

THE CONTRACTOR SHALL REFER TO THE ABOVE NOTED SURVEY AND PLAN, AND SHALL VERIFY BOTH EXISTING AND PROPOSED ITEMS ACCORDING TO THEM.

ABBREVIATIONS

AB	AGGREGATE BASE	LF	LINEAR FEET
AC	ASPHALT CONCRETE	MAX	MAXIMUM
ACC	ACCESSIBLE	MH	MANHOLE
AD	AREA DRAIN	MIN	MINIMUM
BC	BEGINNING OF CURVE	MON.	MONUMENT
B & D	BEARING & DISTANCE	MRO	METERED RELEASE OUTLET
BM	BENCHMARK	(N)	NEW
BUB	BUBBLER BOX	NO.	NUMBER
BW/FG	BOTTOM OF WALL/FINISH GRADE	NTS	NOT TO SCALE
		O.C.	ON CENTER
CB	CATCH BASIN	O/	OVER
C & G	CURB AND GUTTER	(PA)	PLANTING AREA
℄	CENTER LINE	PED	PEDESTRIAN
CPP	CORRUGATED PLASTIC PIPE (SMOOTH INTERIOR)	PIV	POST INDICATOR VALVE
		PSS	PUBLIC SERVICES EASEMENT
CO	CLEANOUT	⅊	PROPERTY LINE
COTG	CLEANOUT TO GRADE	PP	POWER POLE
CONC	CONCRETE	PUE	PUBLIC UTILITY EASEMENT
CONST	CONSTRUCT or -TION	PVC	POLYVINYL CHLORIDE
CONC COR	CONCRETE CORNER	R	RADIUS
CY	CUBIC YARD	RCP	REINFORCED CONCRETE PIPE
D	DIAMETER	RIM	RIM ELEVATION
DI	DROP INLET	RW	RAINWATER
DIP	DUCTILE IRON PIPE	R/W	RIGHT OF WAY
EA	EACH	S	SLOPE
EC	END OF CURVE	S.A.D.	SEE ARCHITECTURAL DRAWINGS
EG	EXISTING GRADE	SAN	SANITARY
EL	ELEVATIONS	SD	STORM DRAIN
EP	EDGE OF PAVEMENT	SDMH	STORM DRAIN MANHOLE
EQ	EQUIPMENT	SHT	SHEET
EW	EACH WAY	S.L.D.	SEE LANDSCAPE DRAWINGS
(E)	EXISTING	SPEC	SPECIFICATION
FC	FACE OF CURB	SS	SANITARY SEWER
FF	FINISHED FLOOR	SSCO	SANITARY SEWER CLEANOUT
FG	FINISHED GRADE	SSMH	SANITARY SEWER MANHOLE
FH	FIRE HYDRANT	ST.	STREET
FL	FLOW LINE	STA	STATION
FS	FINISHED SURFACE	STD	STANDARD
G	GAS	STRUCT	STRUCTURAL
GA	GAGE OR GAUGE	T	TELEPHONE
GB	GRADE BREAK	TC	TOP OF CURB
HDPE	HIGH DENSITY CORRUGATED POLYETHYLENE PIPE	TOW	TOP OF WALL
		TEMP	TEMPORARY
HORIZ	HORIZONTAL	TP	TOP OF PAVEMENT
HI PT	HIGH POINT	TW/FG	TOP OF WALL/FINISH GRADE
H&T	HUB & TACK	TYP	TYPICAL
ID	INSIDE DIAMETER	VC	VERTICAL CURVE
INV	INVERT ELEVATION	VCP	VITRIFIED CLAY PIPE
JB	JUNCTION BOX	VERT	VERTICAL
JT	JOINT TRENCH	W/	WITH
JP	JOINT UTILITY POLE	W, WL	WATER LINE
L	LENGTH	WM	WATER METER
LNDG	LANDING	WWF	WELDED WIRE FABRIC

RETAINING WALL NOTES

1. TW/FG REPRESENTS FINISHED EARTHEN GRADE OR PAVEMENT ELEVATION AT TOP OF WALL, NOT ACTUAL TOP OF WALL MATERIAL. BW/FG REPRESENTS FINISH EARTHEN GRADE OR PAVEMENT ELEVATION AT BOTTOM OF WALL NOT INCLUDING FILL FOUNDATION. GRADES INDICATED ON THESE PLANS REFER TO THE FINISHED GRADES ADJACENT TO THE RETAINING WALL, NOT INCLUDING FOOTING, FREEBOARD, ETC.
2. DIMENSIONS SHOWN IN BRACKETS SHOWN AS [X.X'] DENOTE THE EFFECTIVE WALL HEIGHT ONLY. THE ACTUAL WALL HEIGHT AND DEPTH MAY DIFFER DUE TO CONSTRUCTION REQUIREMENTS.
3. REFER TO SPECIFIC WALL CONSTRUCTION DETAIL FOR STRUCTURAL ELEMENTS, FREEBOARD, AND EMBEDMENT.
4. REFER TO ARCHITECTURAL, LANDSCAPE ARCHITECTURE, AND/OR STRUCTURAL PLANS FOR DETAILS, WALL ELEVATIONS, SUBDRAINAGE, WATERPROOFING, FINISHES, COLORS, STEEL REINFORCING, MATERIALS, ETC. PROVIDE CLIPS OR OTHER MEANS OF SECURING FINISH MATERIALS AS NECESSARY (WET SET INTO THE WALL).
5. ALL RETAINING WALLS SHOULD HAVE A BACK-OF-WALL SUB-SURFACE DRAINAGE SYSTEM TO PREVENT HYDROSTATIC PRESSURE.
6. SEE DETAIL SHEET FOR SPECIFIC INFORMATION.
7. PROVIDE GUARDRAIL (WHERE APPLICABLE AND DESIGNED BY OTHERS) AS REQUIRED FOR GRADE SEPARATION OF 30 INCHES OR MORE MEASURED 5' HORIZONTALLY FROM FACE OF WALL, PER CBC.

ESTIMATED EARTHWORKS QUANTITIES

CUT			MAX. DEPTH
CUT (SITE GRADING)	95	CY	4 FEET (POOL)
CUT (WITHIN BUILDING FOOTPRINT)	0	CY	N/A
CUT TOTAL OVERALL VOLUME	95	CY	
FILL			**MAX. DEPTH**
FILL (SITE GRADING)	30	CY	4 (LANDSCAPE)
FILL (WITHIN BUILDING FOOTPRINT)	0	CY	N/A
FILL TOTAL OVERALL VOLUME	30	CY	
TOTAL EXPORT:	65	CY	

NOTE: GRADING QUANTITIES REPRESENT BANK YARDAGE. IT DOES NOT INCLUDE ANY SWELLING OR SHRINKAGE FACTORS AND IS INTENDED TO REPRESENT IN-SITU CONDITIONS. QUANTITIES DO NOT INCLUDE OVER-EXCAVATION, TRENCHING, STRUCTURAL FOUNDATIONS OR PIERS, OR POOL EXCAVATION (IF ANY). NOTE ADDITIONAL EARTHWORKS, SUCH AS KEYWAYS OR BENCHING MAY BE REQUIRED BY THE GEOTECHNICAL ENGINEER IN THE FIELD AT TIME OF CONSTRUCTION. CONTRACTOR TO VERIFY QUANTITIES

KEY MAP

1" = 30'

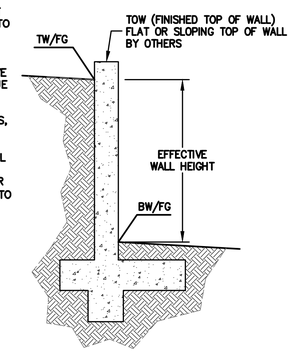

NOTES

ALL DISTANCES AND DIMENSIONS ARE IN FEET AND DECIMALS.

UNDERGROUND UTILITY LOCATION IS BASED ON SURFACE EVIDENCE.

BUILDING FOOTPRINTS ARE SHOWN TO FINISHED MATERIAL (STUCCO/SIDING) AT GROUND LEVEL.

FINISH FLOOR ELEVATIONS ARE TAKEN AT DOOR THRESHOLD (EXTERIOR).

ALL RETAINING WALLS ARE CONCRETE RETAINING WALLS, UNLESS NOTED OTHERWISE.

BENCHMARK

TOWN OF LOS ALTOS HILLS
BENCHMARK #17
LOCATED AT THE NORTHEASTERLY CORNER OF THE STORM DRAINAGE STRUCTURE AT THE SOUTHEASTERLY CORNER OF THE INTERSECTION OF ELENA AND PURISSIMA ROADS
ELEVATION = 280.09'
(NAVD 88 DATUM)

EASEMENT NOTE

EASEMENTS SHOWN ARE PER TITLE REPORT PREPARED BY OLD REPUBLIC TITLE COMPANY, ORDER NO. 0611021400-PG, DATED JANUARY 18, 2019. THE EXACT LOCATION OF AN EASEMENT FOR INGRESS AND EGRESS TO A WATER METER PER (8065 O.R. 31) IS NOT OF RECORD. THE 20' SANITARY SEWER EASEMENT PER DOCUMENT (15734041) HAS BEEN VACATED BY DOCUMENT (23680602).

SITE BENCHMARK

SURVEY CONTROL POINT
BRASS DISK WITH PUNCH
ELEVATION = 331.44'
(NAVD 88 DATUM)

*** BUILDING PAD NOTE:**
ADJUST PAD LEVEL AS REQUIRED. REFER TO STRUCTURAL PLANS FOR SLAB SECTION OR CRAWL SPACE DEPTH TO ESTABLISH PAD LEVEL.

NOTE:
FOR CONSTRUCTION STAKING SCHEDULING OR QUOTATIONS PLEASE CONTACT ALEX ABAYA AT LEA & BRAZE ENGINEERING (510)887-4086 EXT 116.
aabaya@leabraze.com

1-800-227-2600 CALL BEFORE YOU DIG USA UNDERGROUND SERVICE ALERT

SHEET INDEX

C-1.0	TITLE SHEET
C-1.1	OVERALL SITE PLAN
C-2.0	GRADING & DRAINAGE PLANS
C-3.0	DETAILS
C-3.1	DETAILS
C-4.0	GRADING SPECIFICATIONS
ER-1	EROSION CONTROL
ER-2	EROSION CONTROL DETAILS

REGISTERED PROFESSIONAL ENGINEER PETER CARLINO No. C79555 CIVIL STATE OF CALIFORNIA ORIGINAL SIGNATURES IN BLUE INK

LEA & BRAZE ENGINEERING, INC.
CIVIL ENGINEERS • LAND SURVEYORS
MAIN OFFICE:
2495 INDUSTRIAL PKWY WEST
HAYWARD, CALIFORNIA 94545
(510) 887-4086
REGIONAL OFFICES:
ROSEVILLE
DUBLIN
SAN JOSE
WWW.LEABRAZE.COM

BADHWAR RESIDENCE
12830 DEER CREEK LANE
LOS ALTOS HILLS,
CALIFORNIA
SANTA CLARA COUNTY
APN: 175-43-050

TITLE SHEET

REVISIONS	BY
–	–
–	–
–	–
–	–
–	–

JOB NO:	2200166
DATE:	06-25-20
SCALE:	1" = 30'
DESIGN BY:	MR
CHECKED BY:	KC
SHEET NO:	C-1.0

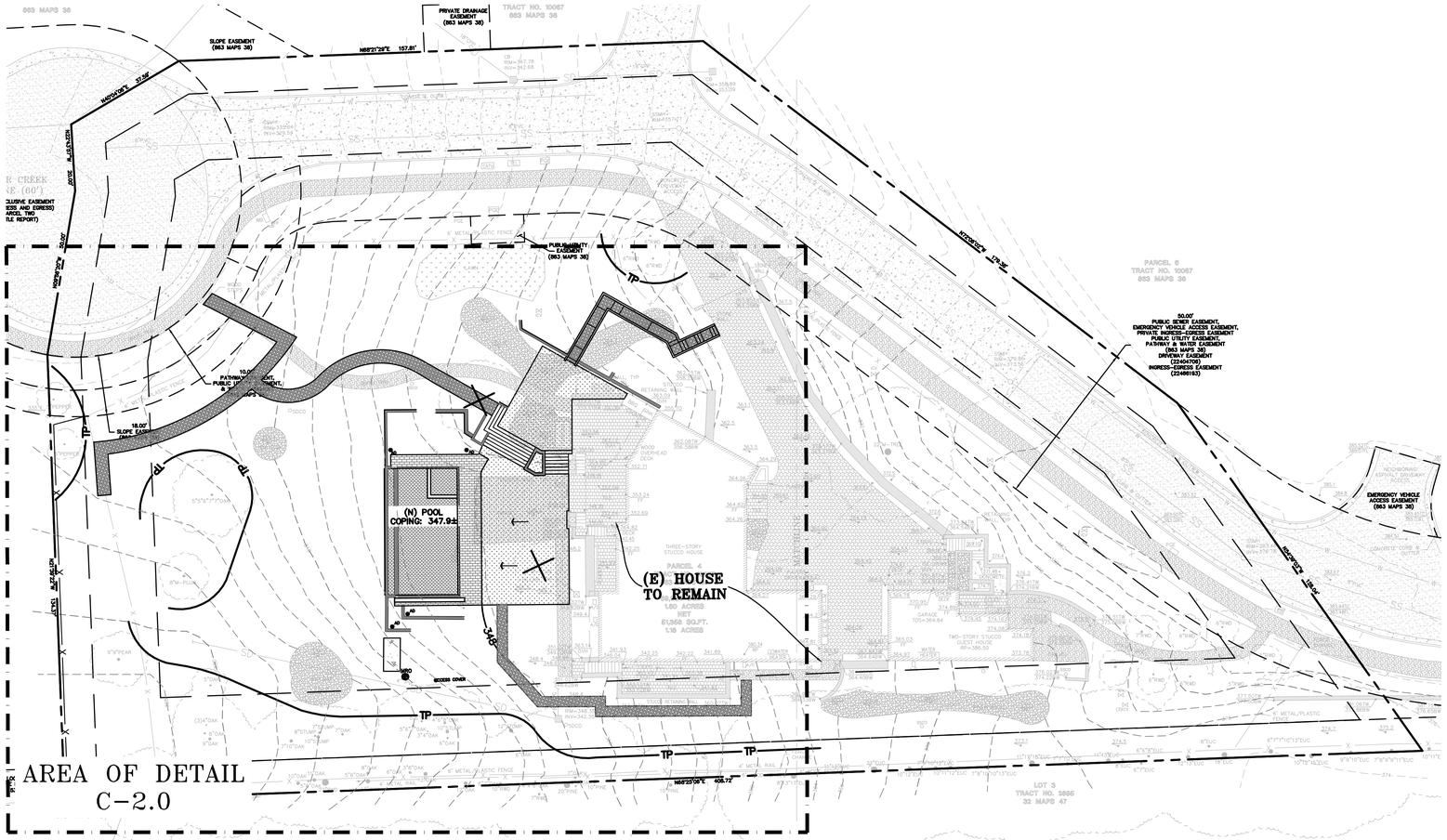

GENERAL NOTES FOR SEWER LATERAL CONNECTIONS

1. ALL REFERENCES TO "TOWN" IN THESE GENERAL NOTES SHALL MEAN TOWN OF LOS ALTOS HILLS PUBLIC WORKS DEPARTMENT.
2. ALL SANITARY SEWER WORKMANSHIP AND MATERIALS SHALL CONFORM TO REQUIREMENTS OF CURRENT TOWN STANDARD DETAILS, CONSTRUCTION STANDARDS, AND THE CITY ENGINEER.
3. THE APPROVAL OF THESE PLANS BY THE TOWN SHALL BE INTERPRETED TO MEAN THAT THE SANITARY SEWER DESIGN SHOWN ON THESE PLANS MEETS THE TOWN'S STANDARDS. THE TOWN'S APPROVAL IN NO WAY GUARANTEES ANY OTHER ASPECT OF THIS PLAN OR ITS ACCURACY RELATIVE TO ACTUAL FIELD CONDITIONS.
4. THE CITY ENGINEER IS AUTHORIZED TO REQUIRE MODIFICATIONS DURING CONSTRUCTION.
5. THE CONTRACTOR SHALL CONTACT THE TOWN AT 650-941-7222, TWO (2) WORKING DAYS IN ADVANCE OF BEGINNING ANY SANITARY SEWER WORK. THE CONTRACTOR SHALL THEREAFTER KEEP THE TOWN INSPECTOR INFORMED OF HIS SCHEDULE FOR SANITARY SEWER WORK.
6. PRIOR TO COMMENCEMENT OF EXCAVATION WORK, THE CONTRACTOR SHALL CONTACT ALL UTILITY COMPANIES BY CALLING UNDERGROUND SERVICE ALERT (USA) AT 1-800-227-2600 AT LEAST FORTY-EIGHT (48) HOURS PRIOR TO START OF CONSTRUCTION.
7. THE CONTRACTOR SHALL FIELD VERIFY THE LOCATION OF ALL UTILITIES BEFORE BEGINNING ANY EXCAVATION.
8. THE CONTRACTOR SHALL OBTAIN ANY AND ALL PERMITS REQUIRED BY THE TOWN BEFORE BEGINNING ANY SANITARY SEWER WORK.
9. CONTRACTOR SHALL OBTAIN ENCROACHMENT PERMIT PRIOR TO ANY WORK IN THE TOWN RIGHT-OF-WAY. A PRECONSTRUCTION MEETING IS REQUIRED WITH THE PUBLIC WORKS DEPARTMENT.
10. APPLICANT SHALL PROVIDE SUFFICIENT DEPOSIT TO THE TOWN FOR INSPECTION, TESTING, COMMUNITY OUTREACH, STAFF TIME, ARBORIST, TRAFFIC CONSULTANTS, SAFETY SPECIALIST AND OTHER SERVICES AS DETERMINED BY THE CITY ENGINEER. ANY OUTSTANDING DEPOSIT SHALL BE PAID IN FULL PRIOR TO FINAL SIGN OFF.
11. SEWER CONNECTION PERMITS SHALL BE ISSUED BY THE TOWN FOR ALL PROPOSED NEW CONNECTIONS.
12. EXISTING SANITARY SEWER SERVICE SHALL BE MAINTAINED AT ALL TIMES. THE CONTRACTOR SHALL USE WHATEVER MEANS NECESSARY (E.G. PUMPS, BYPASS LINES, ETC.) TO MAINTAIN THIS SERVICE DURING CONSTRUCTION.
13. PRIOR TO COMMENCING ANY SANITARY SEWER WORK IN EASEMENTS, THE CONTRACTOR SHALL PROVIDE THE TOWN WITH ADEQUATE EVIDENCE THAT ALL AFFECTED PROPERTY OWNERS (AND TENANTS WHERE APPLICABLE) WERE NOTIFIED FORTY-EIGHT (48) HOURS PRIOR TO THE DATE OF WORK AND THAT THEY HAVE UPDATED THAT NOTICE IN A TIMELY MANNER WHEN THOSE DATES HAVE CHANGED.
14. ALL SANITARY SEWER WORK CONSTRUCTED WITHOUT INSPECTION BY THE TOWN SHALL BE REMOVED AND RECONSTRUCTED WITH INSPECTION.
15. ALL SANITARY SEWER LATERALS SHALL BE 4" PVC-SDR 26 OR APPROVED EQUAL, ONE PER LOT AND MARKED WITH THE LETTER "S" ON A POST PER TOWN'S STANDARDS.
16. SEWER LATERALS SHALL BE A MINIMUM OF 4' BELOW TOP OF CURB OR FINISHED GROUND AT PROPERTY LINE UNLESS AUTHORIZED BY THE CITY ENGINEER.
17. THE CONTRACTOR SHALL BE RESPONSIBLE FOR VERIFYING THE ELEVATION OF ALL EXISTING STORM DRAINS AND SEWERS TO BE EXTENDED OR CONNECTED PRIOR TO COMMENCING WORK.
18. TRAFFIC CONTROL PLAN SHALL BE PREPARED BY A LICENSED TRAFFIC ENGINEER. TRAFFIC CONTROL PLAN SHALL BE IN ACCORDANCE WITH TOWN'S CONSTRUCTION STANDARDS AND SUBJECT TO REVIEW AND APPROVAL OF THE CITY ENGINEER PRIOR TO PERMIT ISSUANCE.
19. TWO OPEN TRAFFIC LANES ARE REQUIRED DURING ALL NON-WORKING HOURS. ONE TRAVEL LANE MAY BE CLOSED DURING WORK HOURS WHEN FLAGGERS ARE PRESENT.
20. SEWER TRENCHES AND PERMANENT PAVEMENT WITHIN RIGHT-OF-WAY AND/OR EASEMENTS SHALL CONFORM TO TOWN'S STANDARD DETAIL UT-1 AND UT-2.
21. COMPLY WITH CAL/OSHA TITLE 8 REGULATIONS PAYING SPECIAL ATTENTION TO CHAPTER 4 – DIVISION OF INDUSTRIAL SAFETY, SUBCHAPTER 4, ARTICLE 6 REGARDING EXCAVATIONS. THE CONTRACTOR SHALL INSTALL PROTECTIVE SYSTEMS" FOR TRENCHES DEEPER THAN 5 FEET IN DEPTH AND "ACCESS AND EGRESS" FOR TRENCHES GREATER THAN 4 FEET IN DEPTH AS PER CAL/OSHA REQUIREMENTS.
22. NO OPEN TRENCHES IN THE STREET RIGHT-OF-WAY WILL BE ALLOWED OVERNIGHT. ALL TRENCHES SHALL BE BACKFILL THE SAME DAY THE TRENCH WAS EXCAVATED, EXCEPT THAT PORTION OF THE TRENCH OR EXCAVATION TO BE USED FOR CONNECTING THE EXTENSION OF THE INSTALLATION. THAT SAID PORTION SHALL BE ADEQUATELY BARRICADED AND PROTECTED TO THE SATISFACTION OF THE CITY ENGINEER OR HIS REPRESENTATIVE. EXCAVATIONS OR TRENCHES FOR POURED IN PLACE CONCRETE MANHOLE MAY REMAIN OPEN FOR A PERIOD NOT TO EXCEED SEVEN DAYS, PROVIDING SAID EXCAVATION OR TRENCHES ARE ADEQUATELY BARRICADED, FENCED, AND PLATED WITH SKID RESISTANT STEEL PLATE OF ADEQUATE THICKNESS AND FLUSHED WITH PAVEMENT. THE NUMBER OF PLATES TO BE UTILIZED EACH DAY SHALL BE APPROVED BY THE CITY ENGINEERING OR HIS REPRESENTATIVE.
23. TRACER WIRE" SHALL BE INSTALLED ALONG THE TOP OF THE PIPE FOR ALL SECTIONS OF THE SEWER LINE. THE WIRE SHALL BE SOLID COPPER AWG #10 WITH AN INSULATED JACKET. DETECTOR TAPE SHALL ALSO BE INSTALLED WITHIN TOP 12" OF PAVEMENT.
24. THE TOWN IS NOT RESPONSIBLE FOR CLEANING PRIVATE SEWER LATERALS. THE PROPERTY OWNER IS FULLY RESPONSIBLE FOR MAINTENANCE, REPAIR, AND REPLACEMENT OF THE (A) LATERAL FROM THE HOUSE TO THE MAIN INCLUDING WYE CONNECTION AT THE MAIN, (B) OVERFLOW, AND (C) BACKFLOW DEVICES.
25. ALL WORKS TO BE DONE TO THE SATISFACTION OF THE CITY ENGINEER.

FIRE DEPARTMENT CONSTRUCTION NOTES

1. FIRE SPRINKLERS REQUIRED: AN AUTOMATIC RESIDENTIAL FIRE SPRINKLER SYSTEM SHALL BE INSTALLED IN ONE- AND TWO-FAMILY DWELLINGS AS FOLLOWS: IN ALL NEW ONE- AND TWO-FAMILY DWELLINGS AND IN EXISTING ONE- AND TWO-FAMILY DWELLINGS WHEN ADDITIONS ARE MADE THAT INCREASE THE BUILDING AREA TO MORE THAN 3,600 SQUARE FEET. EXCEPTION: A ONE-TIME ADDITION TO AN EXISTING BUILDING THAT DOES NOT TOTAL MORE THAN 1,000 SQUARE FEET OF BUILDING AREA. NOTE: THE OWNER(S), OCCUPANT(S) AND ANY CONTRACTOR(S) OR SUBCONTRACTOR(S) ARE RESPONSIBLE FOR CONSULTING WITH THE WATER PURVEYOR OF RECORD IN ORDER TO DETERMINE IF ANY MODIFICATION OR UPGRADE OF THE EXISTING WATER SERVICE IS REQUIRED. NOTE: COVERED PORCHES, PATIOS, BALCONIES, AND ATTIC SPACES MAY REQUIRE FIRE SPRINKLER COVERAGE. FOR BUILDINGS IN EXCESS OF 6200 SQUARE FEET, THE (4) FOUR MOST HYDRAULICALLY DEMANDING HEADS IN A ROOM OR COMPARTMENT SHALL BE CALCULATED. FIRE DEPARTMENT CONNECTION: FOR BUILDINGS IN EXCESS OF 6200 SQUARE FEET, A FIRE DEPARTMENT CONNECTION (FDC) SHALL BE PROVIDED. THE FDC SHALL CONSIST OF AT LEAST ONE 2.5" HOSE CONNECTION THAT IS CONNECTED TO THE SPRINKLER RISER WITH A PIPE NOT LESS THAN THE DIAMETER OF THE SPRINKLER RISER. A STATE OF CALIFORNIA LICENSED (C-16) FIRE PROTECTION CONTRACTOR SHALL SUBMIT PLANS, CALCULATIONS, A COMPLETED PERMIT APPLICATION AND APPROPRIATE FEES TO THIS DEPARTMENT FOR REVIEW AND APPROVAL PRIOR TO BEGINNING THEIR WORK. SECTION R313.2 AS ADOPTED AND AMENDED BY LOS ALTOS HILLS MUNICIPAL CODE.

2. WATER SUPPLY REQUIREMENTS: POTABLE WATER SUPPLIES SHALL BE PROTECTED FROM CONTAMINATION CAUSED BY FIRE PROTECTION WATER SUPPLIES. IT IS THE RESPONSIBILITY OF THE APPLICANT AND ANY CONTRACTORS AND SUBCONTRACTORS TO CONTACT THE WATER PURVEYOR SUPPLYING THE SITE OF SUCH PROJECT, AND TO COMPLY WITH THE REQUIREMENTS OF THAT PURVEYOR. SUCH REQUIREMENTS SHALL BE INCORPORATED INTO THE DESIGN OF ANY WATER-BASED FIRE PROTECTION SYSTEMS, AND/ OR FIRE SUPPRESSION WATER SUPPLY SYSTEMS OR STORAGE CONTAINERS THAT MAY BE PHYSICALLY CONNECTED IN ANY MANNER TO AN APPLIANCE CAPABLE OF CAUSING CONTAMINATION OF THE POTABLE WATER SUPPLY OF THE PURVEYOR OF RECORD. FINAL APPROVAL OF THE SYSTEM(S) UNDER CONSIDERATION WILL NOT BE GRANTED BY THIS OFFICE UNTIL COMPLIANCE WITH THE REQUIREMENTS OF THE WATER PURVEYOR OF RECORD ARE DOCUMENTED BY THAT PURVEYOR AS HAVING BEEN MET BY THE APPLICANT(S). 2010 CFC SEC. 903.3.5 AND HEALTH AND SAFETY CODE 13114.7

3. CONSTRUCTION SITE FIRE SAFETY: ALL CONSTRUCTION SITES MUST COMPLY WITH APPLICABLE PROVISIONS OF THE CFC CHAPTER 33 AND SANTA CLARA COUNTY FIRE DEPARTMENT STANDARD DETAIL AND SPECIFICATION SI-7. PROVIDE APPROPRIATE NOTATIONS ON SUBSEQUENT PLAN SUBMITTALS, AS APPROPRIATE TO THE PROJECT. CFC CHP. 33

4. PREMISES IDENTIFICATION: NEW AND EXISTING BUILDINGS SHALL HAVE APPROVED ADDRESS NUMBERS, BUILDING NUMBERS, OR APPROVED BUILDING IDENTIFICATION PLACED IN A POSITION THAT IS PLAINLY LEGIBLE AND VISIBLE FROM THE STREET OR ROAD FRONTING THE PROPERTY. THESE NUMBERS SHALL CONTRAST WITH THEIR BACKGROUND. ADDRESS NUMBERS SHALL BE ARABIC NUMBERS OR ALPHABETICAL LETTERS. NUMBERS SHALL BE A MINIMUM OF 4 INCHES HIGH WITH A MINIMUM STROKE WIDTH OF 0.5 INCH. WHERE ACCESS IS BY MEANS OF A PRIVATE ROAD AND THE BUILDING CANNOT BE VIEWED FROM THE PUBLIC WAY, A MONUMENT, POLE, OR OTHER SIGN OR MEANS SHALL BE USED TO IDENTIFY THE STRUCTURE CFC SECTION. 505.1

5. FIRE APPARATUS (ENGINE) ACCESS DRIVEWAY REQUIRED: PROVIDE AN ACCESS DRIVEWAY WITH A PAVED ALL WEATHER SURFACE, A MINIMUM UNOBSTRUCTED WIDTH OF 14 FEET, VERTICAL CLEARANCE OF 13 FEET 6 INCHES, MINIMUM CIRCULATING TURNING RADIUS OF 40 FEET OUTSIDE, AND A MAXIMUM SLOPE OF 15%. INSTALLATIONS SHALL CONFORM TO FIRE DEPARTMENT STANDARD DETAILS AND SPECIFICATIONS SHEET D-1. THIS IS ILLUSTRATED 011 CURRENT PLA11S CFC SEC. 503

NOTE:
THE PROPERTY OWNER SHALL INFORM THE TOWN OF ANY DAMAGE AND SHALL REPAIR ANY DAMAGE CAUSED BY THE CONSTRUCTION OF THE PROJECT TO THE PATHWAYS, PRIVATE DRIVEWAYS, AND PUBLIC AND PRIVATE ROADWAYS, PRIOR TO FINAL INSPECTION AND RELEASE OF OCCUPANCY PERMITS AND SHALL PROVIDE THE TOWN WITH PHOTOGRAPHS OF THE EXISTING CONDITIONS OF THE ROADWAYS AND PATHWAYS PRIOR TO ACCEPTANCE OF PLANS FOR BUILDING PLAN CHECK.

** EXISTING UTILITY NOTE:
CONTRACTOR TO VERIFY EXISTING UTILITIES SIZE, LOCATION, AND SLOPE PRIOR TO CONSTRUCTION. NOTIFY LEA & BRAZE ENGINEERING OF DISCREPANCIES.

1-800-227-2600
CALL BEFORE YOU DIG
USA
UNDERGROUND SERVICE ALERT

NOTE:
FOR CONSTRUCTION STAKING SCHEDULING OR QUOTATIONS PLEASE CONTACT ALEX ABAYA AT LEA & BRAZE ENGINEERING (510)887-4086 EXT 116.
aabaya@leabraze.com

NOTE:
NO GRADING SHALL TAKE PLACE DURING THE WET SEASON GRADING RESTRICTION (OCT. 1ST TO APRIL 30TH) EXCEPT WITH PRIOR APPROVAL FROM THE TOWN ENGINEER.

0 10 20 40
SCALE: 1" = 20'

* BUILDING PAD NOTE:
ADJUST PAD LEVEL AS REQUIRED. REFER TO STRUCTURAL PLANS FOR SLAB SECTION OR CRAWL SPACE DEPTH TO ESTABLISH PAD LEVEL.

HARDSCAPE NOTE:
SEE ARCHITECTURAL HARDSCAPE PLAN FOR AREAS OF NEW HARDSCAPING TO BE ADDED AND AREAS OF EXISTING HARDSCAPE TO BE REMOVED

NOTE:
CONTRACTOR SHALL NOTIFY THE OWNER AND/OR MAINTENANCE STAFF IN WRITING OF THE NEED OF PERIODIC MAINTENANCE OF THE DRAINAGE SYSTEM AND STRUCTURES.

REQUIRED DRAINAGE INSPECTIONS
THE TOWN OF LOS ALTOS HILLS REQUIRES LEA & BRAZE ENGINEERING, INC. TO INSPECT ALL STORM DRAINAGE AS IT IS INSTALLED. IT IS THE CONTRACTOR'S RESPONSIBILITY TO CONTACT LEA & BRAZE ENGINEERING, INC. PRIOR TO START OF CONSTRUCTION TO SET UP A PRE-CONSTRUCTION MEETING, AND TO CALL AT LEAST 48 HOURS IN ADVANCE OF ANY INSPECTIONS. PIPES ARE TO REMAIN UNCOVERED UNTIL AN INSPECTION OCCURS.

POINT OF CONTACT:
PETER CARLINO
LEA & BRAZE ENGINEERING, INC.
(510)887-4086 pcarlino@leabraze.com

ENCROACHMENT PERMIT FOR CONSTRUCTION IN THE STREET REQUIRED
CONSTRUCTION CONDUCTED IN THE TOWN RIGHT-OF-WAY MUST HAVE A "PERMIT FOR CONSTRUCTION IN THE STREET" THAT MUST BE OBTAINED FROM THE PUBLIC WORKS DEPARTMENT PRIOR TO COMMENCEMENT OF WORK. ANY CONSTRUCTION WITHIN THE PUBLIC RIGHT-OF-WAY, EASEMENTS, OR OTHER PROPERTY CONTROLLED BY THE CITY/TOWN/COUNTY MUST CONFORM TO STANDARDS ESTABLISHED IN THE TOWN STANDARD SPECIFICATIONS FOR THE UTILITIES DEPT. AND THE PUBLIC WORKS DEPT.

CONTRACTOR TO CONTACT USA 48 HOURS PRIOR TO CONSTRUCTION/ EXCAVATION IN THE RIGHT-OF-WAY.

ANY/ALL PUBLIC IMPROVEMENTS THAT ARE DAMAGED BY THE OWNER OR HIS/HER CONTRACTOR WHILE WORKING ON THIS PROJECT WILL BE THE RESPONSIBILITY OF THE OWNER TO REPAIR, RESTORE, OR REPLACE IN KIND. REPLACEMENT, REPAIR, OR RESTORATION WORK MUST BE IN COMPLIANCE WITH THE TOWN STANDARD SPECIFICATIONS FOR CONSTRUCTION IN THE PUBLIC RIGHT-OF-WAY.

REGISTERED PROFESSIONAL ENGINEER
PETER CARLINO
No. C79555
CIVIL
STATE OF CALIFORNIA
ORIGINAL SIGNATURES IN BLUE INK

LEA & BRAZE ENGINEERING, INC.
CIVIL ENGINEERS • LAND SURVEYORS
MAIN OFFICE:
2495 INDUSTRIAL PKWY WEST
HAYWARD, CALIFORNIA 94545
(510) 887-4086
REGIONAL OFFICES:
ROSEVILLE
DUBLIN
SAN JOSE
WWW.LEABRAZE.COM

BADHWAR RESIDENCE
12830 DEER CREEK LANE
LOS ALTOS HILLS, CALIFORNIA

SANTA CLARA COUNTY APN: 175-43-050

OVERALL SITE PLAN

REVISIONS	BY
–	–
–	–
–	–
–	–
–	–

JOB NO:	2200166
DATE:	06-25-20
SCALE:	1" = 20'
DESIGN BY:	MR
CHECKED BY:	KC
SHEET NO:	C-1.1

02 OF 08 SHEETS

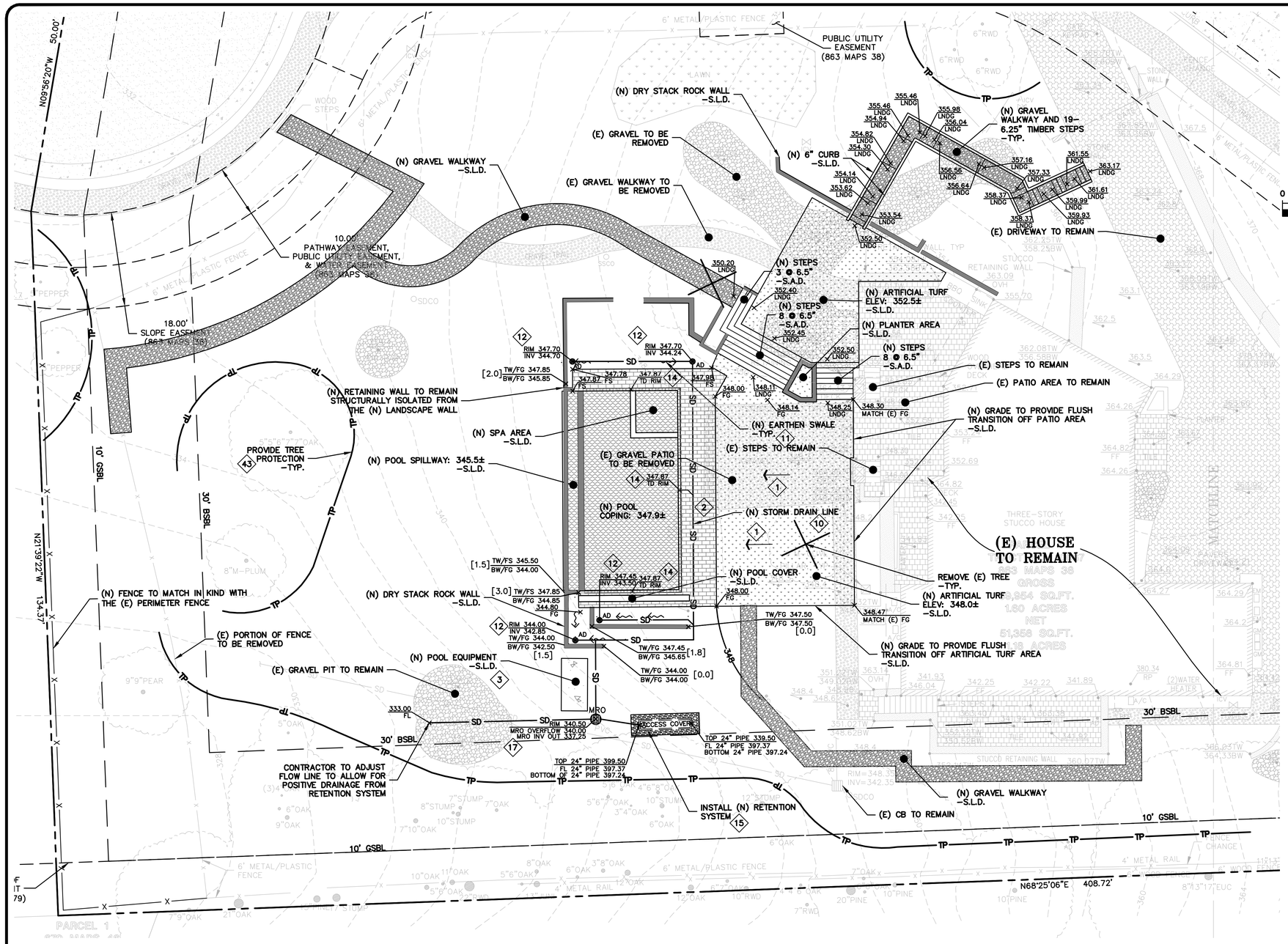

SCALE: 1" = 10'

FLATWORK KEYNOTES 1 TO 3

1. PROVIDE 2% SLOPE ACROSS FLAT WORK AND/OR PAVING PER CBC 1804.4. SLOPE TOWARDS POSITIVE DRAINAGE AS SHOWN ON PLAN.
2. (N) CONCRETE PATIOS/WALKWAYS. SEE DETAIL 1 ON SHEET C–3.0.
3. SLAB FOR POOL EQUIPMENT PER STRUCTURAL DESIGN. SEE STRUCTURAL DRAWINGS.

STORM DRAIN KEYNOTES 10 TO 17

10. INSTALL (N) ON–SITE STORM DRAIN SYSTEM. USE MINIMUM 6" PVC (SDR 35) OR HDPE (ADS N–12 W/ SMOOTH INTERIOR WALLS). MAINTAIN 24" MINIMUM COVER AND SLOPED AT 1% MINIMUM AT ALL TIMES UNLESS OTHERWISE NOTED. PROVIDE CLEANOUT TO GRADE AT MAJOR CHANGES IN DIRECTION. AVOID USING 90° BENDS AND INSTEAD USE (2) 45° BENDS AND WYE CONNECTIONS.
11. CONSTRUCT (N) EARTHEN SWALE SLOPED AT 1% MINIMUM TOWARDS POSITIVE OUTFALL. SEE DETAIL 7 ON SHEET C–3.0.
12. INSTALL (N) 4" DIAMETER HEAVY DUTY PLASTIC BLACK GRATE IN LANDSCAPE OR PLANTER AREAS (NDS PART 78 OR 90 FOR 6" DIAMETER HEAVY DUTY PLASTIC BLACK GRATE). SEE DETAIL 4 ON C–3.0.
13. INSTALL (N) "CHRISTY V–24" SILT BASIN WITH GRAVEL BOTTOM. SEE DETAIL 5 ON SHEET C–3.0.
14. (N) SLOT DRAINS SHALL BE ZURN Z888–6 OR APPROVED EQUAL. CONNECT TO NEAREST STORM DRAIN LINE. USE 6" PVC (SDR–35) OR HDPE (ADS N–12 W/ SMOOTH INTERIOR WALLS).
15. INSTALL (N) RETENTION SYSTEM. SEE DETAIL 1 ON SHEET C–3.1.
16. INSTALL (N) RIP–RAP ENERGY DISSIPATER. SEE DETAIL 3 ON SHEET C–3.1.
17. INSTALL (N) METERED RELEASE OUTLET. SEE DETAIL 2 ON SHEET C–3.1.

DEMOLITION KEYNOTES 41 TO 43

41. DEMOLISH (E) IMPROVEMENTS AS NECESSARY TO ACCOMMODATE (N) CONSTRUCTION. NO DEMOLITION SHALL COMMENCE WITHOUT REQUIRED DEMOLITION PERMITS.
42. REMOVE (E) TREE. CONTRACTOR SHALL OBTAIN THE PROPER TREE REMOVAL PERMITS AS REQUIRED.
43. PROVIDE TREE PROTECTION AROUND TREES TO REMAIN. SEE DETAIL 6 ON SHEET ER–2.

REQUIRED DRAINAGE INSPECTIONS

THE TOWN OF LOS ALTOS HILLS REQUIRES LEA & BRAZE ENGINEERING, INC. TO INSPECT ALL STORM DRAINAGE AS IT IS INSTALLED. IT IS THE CONTRACTOR'S RESPONSIBILITY TO CONTACT LEA & BRAZE ENGINEERING, INC. PRIOR TO START OF CONSTRUCTION TO SET UP A PRE-CONSTRUCTION MEETING, AND TO CALL AT LEAST 48 HOURS IN ADVANCE OF ANY INSPECTIONS. PIPES ARE TO REMAIN UNCOVERED UNTIL AN INSPECTION OCCURS.

POINT OF CONTACT:
PETER CARLINO
LEA & BRAZE ENGINEERING, INC.
(510)887-4086 pcarlino@leabraze.com

ENCROACHMENT PERMIT FOR CONSTRUCTION IN THE STREET REQUIRED
CONSTRUCTION CONDUCTED IN THE TOWN RIGHT–OF–WAY MUST HAVE A "PERMIT FOR CONSTRUCTION IN THE STREET" THAT MUST BE OBTAINED FROM THE PUBLIC WORKS DEPARTMENT PRIOR TO COMMENCEMENT OF WORK. ANY CONSTRUCTION WITHIN THE PUBLIC RIGHT–OF–WAY, EASEMENTS, OR OTHER PROPERTY CONTROLLED BY THE CITY/TOWN/COUNTY MUST CONFORM TO STANDARDS ESTABLISHED IN THE TOWN STANDARD SPECIFICATIONS FOR THE UTILITIES DEPT. AND THE PUBLIC WORKS DEPT.

CONTRACTOR TO CONTACT USA 48 HOURS PRIOR TO CONSTRUCTION/ EXCAVATION IN THE RIGHT–OF–WAY.

ANY/ALL PUBLIC IMPROVEMENTS THAT ARE DAMAGED BY THE OWNER OR HIS/HER CONTRACTOR WHILE WORKING ON THIS PROJECT WILL BE THE RESPONSIBILITY OF THE OWNER TO REPAIR, RESTORE, OR REPLACE IN KIND. REPLACEMENT, REPAIR, OR RESTORATION WORK MUST BE IN COMPLIANCE WITH THE TOWN STANDARD SPECIFICATIONS FOR CONSTRUCTION IN THE PUBLIC RIGHT–OF–WAY.

* BUILDING PAD NOTE:
ADJUST PAD LEVEL AS REQUIRED. REFER TO STRUCTURAL PLANS FOR SLAB SECTION OR CRAWL SPACE DEPTH TO ESTABLISH PAD LEVEL.

HARDSCAPE NOTE:
SEE ARCHITECTURAL HARDSCAPE PLAN FOR AREAS OF NEW HARDSCAPING TO BE ADDED AND AREAS OF EXISTING HARDSCAPE TO BE REMOVED

NOTE:
CONTRACTOR SHALL NOTIFY THE OWNER AND/OR MAINTENANCE STAFF IN WRITING OF THE NEED OF PERIODIC MAINTENANCE OF THE DRAINAGE SYSTEM AND STRUCTURES.

** EXISTING UTILITY NOTE:
CONTRACTOR TO VERIFY EXISTING UTILITIES SIZE, LOCATION, AND SLOPE PRIOR TO CONSTRUCTION. NOTIFY LEA & BRAZE ENGINEERING OF DISCREPANCIES.

NOTE:
NO GRADING SHALL TAKE PLACE DURING THE WET SEASON GRADING RESTRICTION (OCT. 1ST TO APRIL 30TH) EXCEPT WITH PRIOR APPROVAL FROM THE TOWN ENGINEER.

NOTE:
FOR CONSTRUCTION STAKING SCHEDULING OR QUOTATIONS PLEASE CONTACT ALEX ABAYA AT LEA & BRAZE ENGINEERING (510)887-4086 EXT 116. aabaya@leabraze.com

NOTE:
THE PROPERTY OWNER SHALL INFORM THE TOWN OF ANY DAMAGE AND SHALL REPAIR ANY DAMAGE CAUSED BY THE CONSTRUCTION OF THE PROJECT TO THE PATHWAYS, PRIVATE DRIVEWAYS, AND PUBLIC AND PRIVATE ROADWAYS, PRIOR TO FINAL INSPECTION AND RELEASE OF OCCUPANCY PERMITS AND SHALL PROVIDE THE TOWN WITH PHOTOGRAPHS OF THE EXISTING CONDITIONS OF THE ROADWAYS AND PATHWAYS PRIOR TO ACCEPTANCE OF PLANS FOR BUILDING PLAN CHECK.

CALL 1-800-227-2600 BEFORE YOU DIG — USA — UNDERGROUND SERVICE ALERT

REGISTERED PROFESSIONAL ENGINEER — PETER CARLINO — No. C79555 — CIVIL — STATE OF CALIFORNIA — ORIGINAL SIGNATURES IN BLUE INK

LEA & BRAZE ENGINEERING, INC.
CIVIL ENGINEERS • LAND SURVEYORS
MAIN OFFICE: 2495 INDUSTRIAL PKWY WEST HAYWARD, CALIFORNIA 94545 (510) 887-4086
REGIONAL OFFICES: ROSEVILLE DUBLIN SAN JOSE
WWW.LEABRAZE.COM

BADHWAR RESIDENCE
12830 DEER CREEK LANE
LOS ALTOS HILLS, CALIFORNIA
SANTA CLARA COUNTY APN: 175-43-050

GRADING & DRAINAGE PLAN

REVISIONS	BY
–	–
–	–
–	–
–	–
–	–

JOB NO:	2200166
DATE:	06–25–20
SCALE:	1" = 10'
DESIGN BY:	MR
CHECKED BY:	KC
SHEET NO:	C-2.0

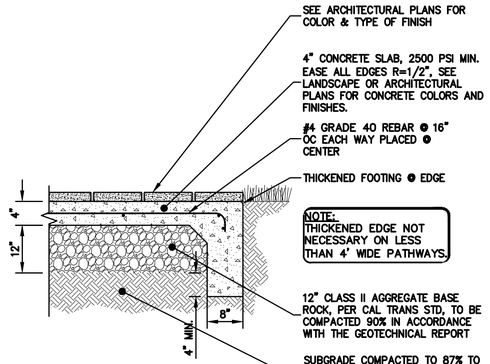

1 C-3.0 **PATIO SLABS**
NTS

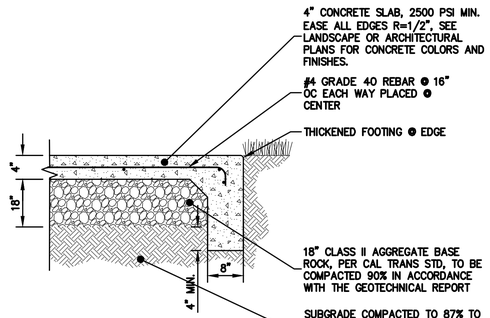

2 C-3.0 **POOL PATIO SLABS**
NTS

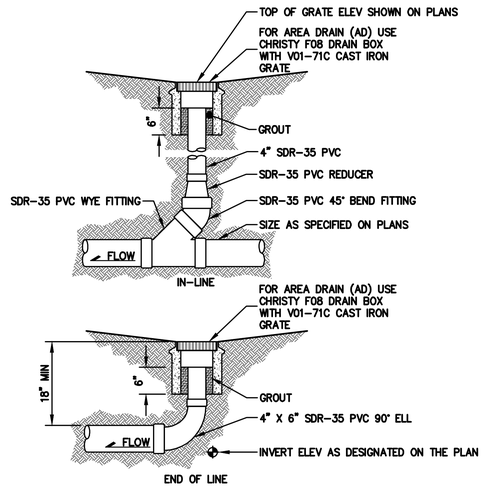

NOTE:
GLUED FITTINGS MAY BE SUBSTITUTED FOR GASKETED FITTINGS AT THE OPTION OF THE INSTALLATION CONTRACTOR.

3 C-3.0 **AREA DRAIN**
NTS

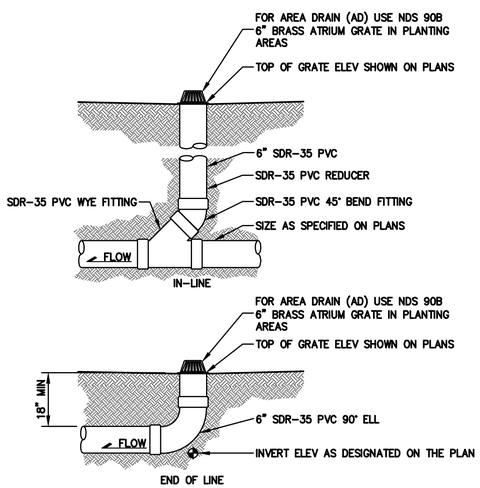

NOTE:
GLUED FITTINGS MAY BE SUBSTITUTED FOR GASKETED FITTINGS AT THE OPTION OF THE INSTALLATION CONTRACTOR.

4 C-3.0 **BRASS ATRIUM AREA DRAIN**
NTS

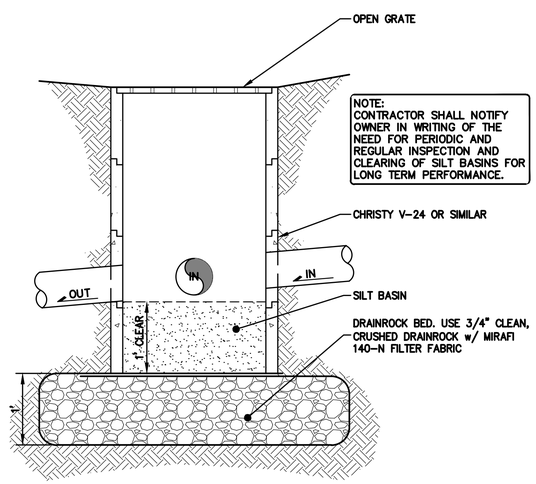

5 C-3.0 **DRAIN INLET/SILT BASIN**
NTS

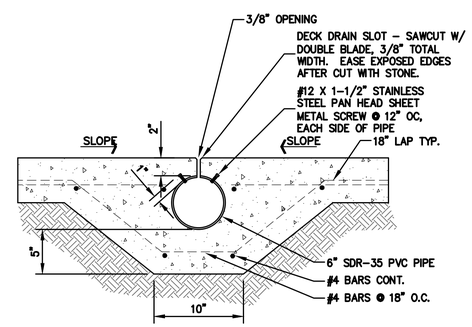

6 C-3.0 **SLOTTED DRAIN DETAIL**
NTS

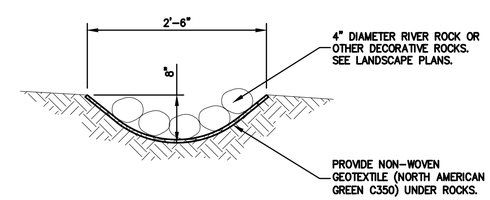

7 C-3.0 **SWALE DETAIL**
NTS

REGISTERED PROFESSIONAL ENGINEER
PETER CARLINO
No. C79555
CIVIL
STATE OF CALIFORNIA
ORIGINAL SIGNATURES IN BLUE INK

LEA & BRAZE ENGINEERING, INC.
CIVIL ENGINEERS • LAND SURVEYORS
MAIN OFFICE:
2495 INDUSTRIAL PKWY WEST
HAYWARD, CALIFORNIA 94545
(510) 887-4086
REGIONAL OFFICES:
ROSEVILLE
DUBLIN
SAN JOSE
WWW.LEABRAZE.COM

BADHWAR RESIDENCE
12830 DEER CREEK LANE
LOS ALTOS HILLS,
SANTA CLARA COUNTY CALIFORNIA
APN: 175-43-050

DETAILS

REVISIONS	BY
–	–
–	–
–	–
–	–
–	–

JOB NO:	2200166
DATE:	06-25-20
SCALE:	NTS
DESIGN BY:	MR
CHECKED BY:	KC
SHEET NO:	C-3.0

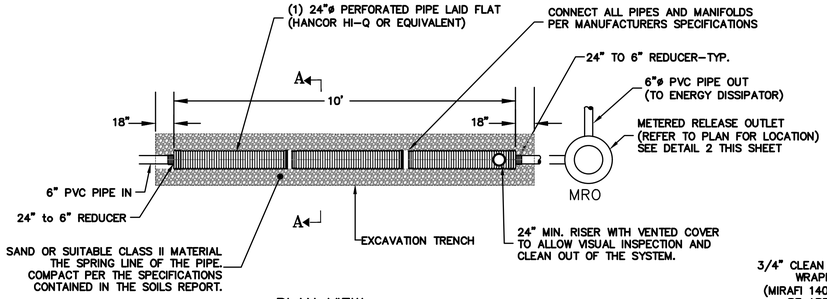

PLAN VIEW

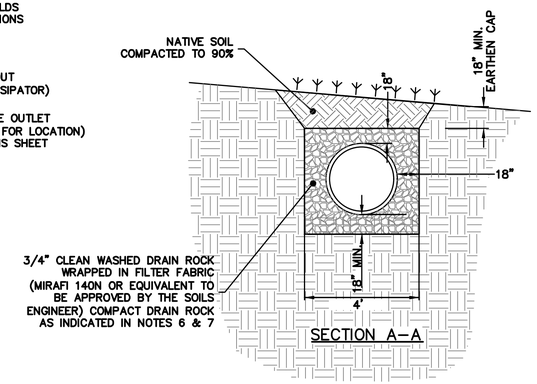

SECTION A–A

NOTE:
1. THIS IS A SCHEMATIC DETAIL.
2. REFER TO THE PLANS FOR SPECIFIC INLET AND OUTLET LOCATIONS.
3. REFER TO THE PLANS FOR SPECIFIC ACCESS COVER AND CLEANOUT LOCATIONS.

NOTES:

1. ALL REFERENCES TO CLASS I OR II MATERIAL ARE PER ASTM D2321 "STANDARD PRACTICE FOR UNDERGROUND INSTALLATION OF THERMOPLASTIC PIPE FOR SEWERS AND OTHER GRAVITY FLOW APPLICATIONS", LATEST EDITION.

2. ALL RETENTION AND DETENTION SYSTEMS SHALL BE INSTALLED IN ACCORDANCE WITH ASTM D2321, LATEST EDITION AND THE MANUFACTURER'S PUBLISHED INSTALLATION GUIDELINES.

3. MEASURES SHOULD BE TAKEN TO PREVENT THE MIGRATION OF NATIVE FINES INTO THE BACKFILL MATERIAL, WHEN REQUIRED. SEE ASTM D2321.

4. FILTER FABRIC: A GEOTEXTILE FABRIC MAY BE USED AS SPECIFIED BY THE GEOTECHNICAL ENGINEER TO PREVENT THE MIGRATION OF FINES FROM THE NATIVE SOIL INTO THE SELECT BACKFILL MATERIAL.

5. FOUNDATION: WHERE THE TRENCH BOTTOM IS UNSTABLE, THE CONTRACTOR SHALL EXCAVATE TO A DEPTH REQUIRED BY THE ENGINEER AND REPLACE WITH SUITABLE COMPETENT MATERIAL AS SPECIFIED BY THE ENGINEER. AS AN ALTERNATIVE AND AT THE DISCRETION OF THE DESIGN ENGINEER, THE TRENCH BOTTOM MAY BE STABILIZED USING A GEOTEXTILE MATERIAL.

6. BEDDING: SUITABLE COMPETENT MATERIAL SHALL BE SAND OR CLASS II OR OTHERWISE SPECIFIED BY THE GEOTECHNICAL ENGINEER. THE CONTRACTOR SHALL PROVIDE DOCUMENTATION FOR MATERIAL SPECIFICATION TO ENGINEER. UNLESS OTHERWISE NOTED BY THE ENGINEER, MINIMUM BEDDING THICKNESS SHALL BE 6" (150mm) COMPACTED TO 90% SPD.

7. INITIAL BACKFILL: SUITABLE MATERIAL SHALL BE SAND OR CLASS II. THE CONTRACTOR SHALL PROVIDE DOCUMENTATION FOR MATERIAL SPECIFICATION TO ENGINEER. MATERIAL SHALL BE INSTALLED AS REQUIRED IN ASTM D2321, LATEST EDITION.

8. MINIMUM COVER: MINIMUM COVER OVER ALL RETENTION/DETENTION SYSTEMS IN NON-TRAFFIC APPLICATIONS (GRASS OR LANDSCAPE AREAS) IS 18" FROM TOP OF PIPE TO GROUND SURFACE, COMPACT AS RECOMMENDED BY THE SOILS ENGINEER. ADDITIONAL COVER MAY BE REQUIRED TO PREVENT FLOATATION. FOR TRAFFIC APPLICATIONS, MINIMUM COVER IS 18" UP TO 36" DIAMETER PIPE AND 24" OF COVER FOR 42" – 60" DIAMETER PIPE, MEASURED FROM TOP OF PIPE TO BOTTOM OF FLEXIBLE PAVEMENT OR TO TOP OF RIGID PAVEMENT.

1 / C-3.1 RETENTION SYSTEM DETAILS

NTS

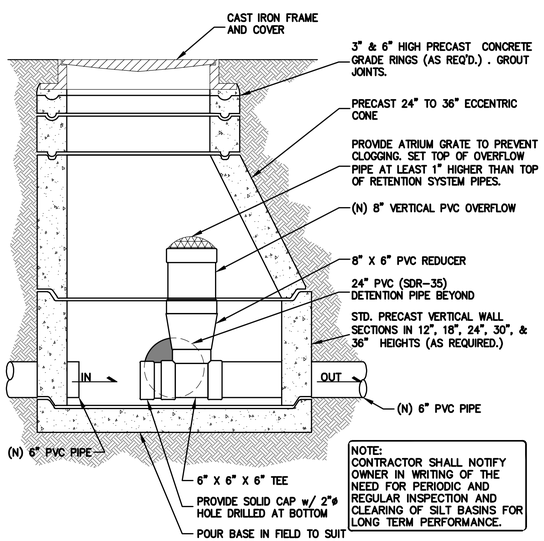

NOTE:
CONTRACTOR SHALL NOTIFY OWNER IN WRITING OF THE NEED FOR PERIODIC AND REGULAR INSPECTION AND CLEARING OF SILT BASINS FOR LONG TERM PERFORMANCE.

2 / C-3.1 METERED RELEASE OUTLET

NTS

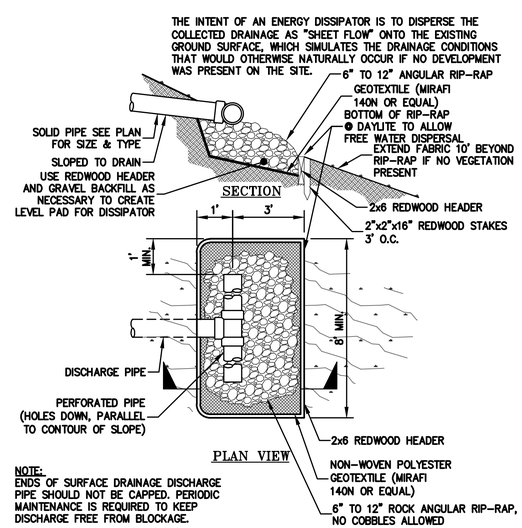

NOTE:
ENDS OF SURFACE DRAINAGE DISCHARGE PIPE SHOULD NOT BE CAPPED. PERIODIC MAINTENANCE IS REQUIRED TO KEEP DISCHARGE FREE FROM BLOCKAGE.

3 / C-3.1 ENERGY DISSIPATER DISCHARGE

NTS

REGISTERED PROFESSIONAL ENGINEER PETER CARLINO No. C79555 CIVIL STATE OF CALIFORNIA ORIGINAL SIGNATURES IN BLUE INK

LEA & BRAZE ENGINEERING, INC.
CIVIL ENGINEERS • LAND SURVEYORS
MAIN OFFICE:
2495 INDUSTRIAL PKWY WEST
HAYWARD, CALIFORNIA 94545
(510) 887-4086
REGIONAL OFFICES:
ROSEVILLE
DUBLIN
SAN JOSE
WWW.LEABRAZE.COM

BADHWAR RESIDENCE
12830 DEER CREEK LANE
LOS ALTOS HILLS,
CALIFORNIA
SANTA CLARA COUNTY APN: 175-43-050

DETAILS

REVISIONS	BY
–	–
–	–
–	–
–	–
–	–

JOB NO:	2200166
DATE:	06-25-20
SCALE:	NTS
DESIGN BY:	MR
CHECKED BY:	KC
SHEET NO:	C-3.1

05 OF 08 SHEETS

GENERAL NOTES

ALL GENERAL NOTES, SHEET NOTES, AND LEGEND NOTES FOUND IN THESE DOCUMENTS SHALL APPLY TYPICALLY THROUGHOUT. IF INCONSISTENCIES ARE FOUND IN THE VARIOUS NOTATIONS, NOTIFY THE ENGINEER IMMEDIATELY IN WRITING REQUESTING CLARIFICATION.

THESE DRAWINGS AND THEIR CONTENT ARE AND SHALL REMAIN THE PROPERTY OF LEA AND BRAZE ENGINEERING, INC. WHETHER THE PROJECT FOR WHICH THEY ARE PREPARED IS EXECUTED OR NOT. THEY ARE NOT TO BE USED BY ANY PERSONS ON OTHER PROJECTS OR EXTENSIONS OF THE PROJECT EXCEPT BY AGREEMENT IN WRITING AND WITH APPROPRIATE COMPENSATION TO THE ENGINEER.

ALL WORK SHALL COMPLY WITH APPLICABLE CODES AND TRADE STANDARDS WHICH GOVERN EACH PHASE OF WORK INCLUDING, BUT NOT LIMITED TO, CALIFORNIA MECHANICAL CODE, CALIFORNIA PLUMBING CODE, CALIFORNIA ELECTRICAL CODE, CALIFORNIA FIRE CODE, CALTRANS STANDARDS AND SPECIFICATIONS, AND ALL APPLICABLE STATE AND/OR LOCAL CODES AND/OR LEGISLATION.

IT IS THE RESPONSIBILITY OF THE CONTRACTOR AND ALL SUBCONTRACTORS TO CHECK AND VERIFY ALL CONDITIONS, DIMENSIONS, LINES AND LEVELS INDICATED. PROPER FIT AND ATTACHMENT OF ALL PARTS IS REQUIRED. SHOULD THERE BE ANY DISCREPANCIES, IMMEDIATELY NOTIFY THE ENGINEER FOR CORRECTION OR ADJUSTMENT THE EVENT OF FAILURE TO DO SO, THE CONTRACTOR SHALL BE RESPONSIBLE FOR CORRECTION OF ANY ERROR.

ALL DIMENSIONS AND CONDITIONS SHALL BE CHECKED AND VERIFIED ON THE JOB BY EACH SUBCONTRACTOR BEFORE HE/SHE BEGINS HIS/HER WORK. ANY ERRORS, OMISSION, OR DISCREPANCIES SHALL BE BROUGHT TO THE ATTENTION OF THE OWNER/CONTRACTOR BEFORE CONSTRUCTION BEGINS.

COMMENCEMENT OF WORK BY THE CONTRACTOR AND/OR ANY SUBCONTRACTOR SHALL INDICATE KNOWLEDGE AND ACCEPTANCE OF ALL CONDITIONS DESCRIBED IN THESE CONSTRUCTION DOCUMENTS, OR EXISTING ON SITE, WHICH COULD AFFECT THEIR WORK.

WORK SEQUENCE

IN THE EVENT ANY SPECIAL SEQUENCING OF THE WORK IS REQUIRED BY THE OWNER OR THE CONTRACTOR, THE CONTRACTOR SHALL ARRANGE A CONFERENCE BEFORE ANY SUCH WORK IS BEGUN.

SITE EXAMINATION: THE CONTRACTOR AND ALL SUBCONTRACTORS SHALL THOROUGHLY EXAMINE THE SITE AND FAMILIARIZE HIM/HERSELF WITH THE CONDITIONS UNDER WHICH THE WORK IS TO BE PERFORMED. THE CONTRACTOR SHALL VERIFY AT THE SITE ALL MEASUREMENTS AFFECTING HIS/HER WORK AND SHALL BE RESPONSIBLE FOR THE CORRECTIONS OF THE SAME. NO EXTRA COMPENSATION WILL BE ALLOWED TO THE CONTRACTOR FOR EXPENSES DUE TO HIS/HER NEGLECT TO EXAMINE, OR FAILURE TO DISCOVER, CONDITIONS WHICH AFFECT HIS/HER WORK.

LEA AND BRAZE ENGINEERING, INC. EXPRESSLY RESERVES ITS COMMON LAW COPYRIGHT AND OTHER PROPERTY RIGHTS IN THESE PLANS. THESE PLANS ARE NOT TO BE REPRODUCED, CHANGED OR COPIED IN ANY FORM OR MANNER WHATSOEVER, NOR ARE THEY TO BE ASSIGNED TO A THIRD PARTY WITHOUT FIRST OBTAINING THE WRITTEN PERMISSION AND CONSENT OF LEA AND BRAZE ENGINEERING, INC. IN THE EVENT OF UNAUTHORIZED REUSE OF THESE PLANS BY A THIRD PARTY, THE THIRD PARTY SHALL HOLD HARMLESS LEA AND BRAZE ENGINEERING, INC.

CONSTRUCTION IS ALWAYS LESS THAN PERFECT SINCE PROJECTS REQUIRE THE COORDINATION AND INSTALLATION OF MANY INDIVIDUAL COMPONENTS BY VARIOUS CONSTRUCTION INDUSTRY TRADES. THESE DOCUMENTS CANNOT PORTRAY ALL COMPONENTS OR ASSEMBLIES EXACTLY. IT IS THE INTENTION OF THESE ENGINEERING DOCUMENTS THAT THEY REPRESENT A REASONABLE STANDARD OF CARE IN THEIR CONTENT. IT IS ALSO PRESUMED BY THESE DOCUMENTS THAT CONSTRUCTION REVIEW SERVICES WILL BE PROVIDED BY THE ENGINEER. SHOULD THE OWNER NOT RETAIN THE ENGINEER TO PROVIDE SUCH SERVICES, OR SHOULD HE/SHE RETAIN THE ENGINEER TO PROVIDE ONLY PARTIAL OR LIMITED SERVICES, THEN IT SHALL BE THE OWNER'S AND CONTRACTOR'S RESPONSIBILITY TO FULLY RECOGNIZE AND PROVIDE THAT STANDARD OF CARE.

IF THE OWNER OR CONTRACTOR OBSERVES OR OTHERWISE BECOMES AWARE OF ANY FAULT OR DEFECT IN THE PROJECT OR NONCONFORMANCE WITH THE CONTRACT DOCUMENTS, PROMPT WRITTEN NOTICE THEREOF SHALL BE GIVEN BY THE OWNER AND/OR CONTRACTOR TO THE ENGINEER.

THE ENGINEER SHALL NOT HAVE CONTROL OF OR CHARGE OF AND SHALL NOT BE RESPONSIBLE FOR CONSTRUCTION MEANS, METHODS, TECHNIQUES, SEQUENCES, OR PROCEDURES, OR FOR SAFETY PRECAUTIONS AND PROGRAMS IN CONNECTION WITH THE WORK, FOR THE ACTS OR OMISSIONS OF THE CONTRACTOR, SUBCONTRACTORS, OR ANY OTHER PERSONS PERFORMING ANY OF THE WORK, OR FOR THE FAILURE OF ANY OF THEM TO CARRY OUT THE WORK IN ACCORDANCE WITH THE CONTRACT DOCUMENTS.

SITE PROTECTION

PROTECT ALL LANDSCAPING THAT IS TO REMAIN. ANY DAMAGE OR LOSS RESULTING FROM EXCAVATION, GRADING, OR CONSTRUCTION WORK SHALL BE CORRECTED OR REPLACED BY THE CONTRACTOR AT NO ADDITIONAL COST TO THE OWNER. THE CONTRACTOR SHALL BE RESPONSIBLE FOR THE LOCATION OF ALL EXISTING SITE UTILITIES AND SHALL COORDINATE THEIR REMOVAL OR MODIFICATIONS (IF ANY) TO AVOID ANY INTERRUPTION OF SERVICE TO ADJACENT AREAS. THE GENERAL CONTRACTOR SHALL INFORM HIM/HERSELF OF MUNICIPAL REGULATIONS AND CARRY OUT HIS/HER WORK IN COMPLIANCE WITH ALL FEDERAL AND STATE REQUIREMENTS TO REDUCE FIRE HAZARDS AND INJURIES TO THE PUBLIC.

STORMWATER POLLUTION PREVENTION NOTES

1) STORE, HANDLE, AND DISPOSE OF CONSTRUCTION MATERIALS AND WASTES PROPERLY, SO AS TO PREVENT THEIR CONTACT WITH STORMWATER.

2) CONTROL AND PREVENT THE DISCHARGE OF ALL POTENTIAL POLLUTANTS, INCLUDING SOLID WASTES, PAINTS, CONCRETE, PETROLEUM PRODUCTS, CHEMICALS, WASH WATER OR SEDIMENT, AND NON-STORMWATER DISCHARGES TO STORM DRAINS AND WATER COURSES.

3) USE SEDIMENT CONTROL OR FILTRATION TO REMOVE SEDIMENT FROM DEWATERING EFFLUENT.

4) AVOID CLEANING, FUELING, OR MAINTAINING VEHICLES ON SITE, EXCEPT IN A DESIGNATED AREA IN WHICH RUNOFF IS CONTAINED AND TREATED.

5) DELINEATE CLEARING LIMITS, EASEMENTS, SETBACKS, SENSITIVE OR CRITICAL AREAS, BUFFER ZONES, TREES AND DISCHARGE COURSE WITH FIELD MARKERS.

6) PROTECT ADJACENT PROPERTIES AND UNDISTURBED AREAS FROM CONSTRUCTION IMPACTS USING VEGETATIVE BUFFER STRIPS, SEDIMENT BARRIERS OF FILTERS, DIKES, MULCHING, OR OTHER MEASURES AS APPROPRIATE.

7) PERFORM CLEARING AND EARTH MOVING ACTIVITIES DURING DRY WEATHER TO THE MAXIMUM EXTENT PRACTICAL.

8) LIMIT AND TIME APPLICATIONS OF PESTICIDES AND FERTILIZERS TO PREVENT POLLUTED RUNOFF.

9) LIMIT CONSTRUCTION ACCESS ROUTES AND STABILIZE DESIGNATED ACCESS POINTS.

10) AVOID TRACKING DIRT OR MATERIALS OFF-SITE; CLEAN OFF-SITE PAVED AREAS AND SIDEWALKS USING DRY SWEEPING METHODS TO THE MAXIMUM EXTENT PRACTICAL.

SUPPLEMENTAL MEASURES

A. THE PHRASE "NO DUMPING – DRAINS TO BAY" OR EQUALLY EFFECTIVE PHRASE MUST BE LABELED ON STORM DRAIN INLETS (BY STENCILING, BRANDING, OR PLAQUES) TO ALERT THE PUBLIC TO THE DESTINATION OF STORM WATER AND TO PREVENT DIRECT DISCHARGE OF POLLUTANTS INTO THE STORM DRAIN.

B. USING FILTRATION MATERIALS ON STORM DRAIN COVERS TO REMOVE SEDIMENT FROM DEWATERING EFFLUENT.

C. STABILIZING ALL DENUDED AREAS AND MAINTAINING EROSION CONTROL MEASURES CONTINUOUSLY FROM OCTOBER 15 AND APRIL 15.

D. REMOVING SPOILS PROMPTLY, AND AVOID STOCKPILING OF FILL MATERIALS, WHEN RAIN IS FORECAST. IF RAIN THREATENS, STOCKPILED SOILS AND OTHER MATERIALS SHALL BE COVERED WITH A TARP OR OTHER WATERPROOF MATERIAL.

E. STORING, HANDLING, AND DISPOSING OF CONSTRUCTION MATERIALS AND WASTES SO AS TO AVOID THEIR ENTRY TO THE STORM DRAIN SYSTEMS OR WATER BODY.

F. AVOIDING CLEANING, FUELING, OR MAINTAINING VEHICLES ON-SITE, EXCEPT IN AN AREA DESIGNATED TO CONTAIN AND TREAT RUNOFF.

GRADING & DRAINAGE NOTES:

1. SCOPE OF WORK

THESE SPECIFICATIONS AND APPLICABLE PLANS PERTAIN TO AND INCLUDE ALL SITE GRADING AND EARTHWORK ASSOCIATED WITH THE PROJECT INCLUDING, BUT NOT LIMITED TO THE FURNISHING OF ALL LABOR, TOOLS AND EQUIPMENT NECESSARY FOR SITE CLEARING AND GRUBBING, SITE PREPARATION, DISPOSAL OF EXCESS OR UNSUITABLE MATERIAL, STRIPPING, KEYING, EXCAVATION, OVER EXCAVATION, RECOMPACTION PREPARATION FOR SOIL RECEIVING FILL, PAVEMENT, FOUNDATION OF SLABS, EXCAVATION, IMPORTATION OF ANY REQUIRED FILL MATERIAL, PROCESSING, PLACEMENT AND COMPACTION OF FILL AND SUBSIDIARY WORK NECESSARY TO COMPLETE THE GRADING TO CONFORM TO THE LINES, GRADING AND SLOPE SHOWN ON THE PROJECT GRADING PLANS.

2. GENERAL

A. ALL SITE GRADING AND EARTHWORK SHALL CONFORM TO THE RECOMMENDATIONS OF THESE SPECIFICATIONS, THE SOILS REPORT; AND THE TOWN OF LOS ALTOS HILLS GRADING ORDINANCE.

B. ALL FILL MATERIALS SHALL BE DENSIFIED SO AS TO PRODUCE A DENSITY NOT LESS THAN 90% RELATIVE COMPACTION BASED UPON ASTM TEST DESIGNATION D1557. FIELD DENSITY TEST WILL BE PERFORMED IN ACCORDANCE WITH ASTM TEST DESIGNATION 2922 AND 3017. THE LOCATION AND FREQUENCY OF THE FIELD DENSITY TEST WILL BE AS DETERMINED BY THE SOIL ENGINEER. THE RESULTS OF THESE TEST AND COMPLIANCE WITH THE SPECIFICATIONS WILL BE THE BASIS UPON WHICH SATISFACTORY COMPLETION OF THE WORK WILL BE JUDGED BY THE SOIL ENGINEER. ALL CUT AND FILL SLOPES SHALL BE CONSTRUCTED AS SHOWN ON PLANS, BUT NO STEEPER THAN TWO (2) HORIZONTAL TO ONE (1) VERTICAL.

C. THE CONTRACTOR SHALL BE RESPONSIBLE FOR THE SATISFACTORY COMPLETION OF ALL THE EARTHWORK IN ACCORDANCE WITH THESE PLANS AND SPECIFICATIONS. NO DEVIATION FROM THESE SPECIFICATIONS SHALL BE MADE EXCEPT UPON WRITTEN APPROVAL BY THE SOILS ENGINEER. BOTH CUT AND FILL AREAS SHALL BE SURFACE COMPLETED TO THE SATISFACTION OF THE SOILS ENGINEER AT THE CONCLUSION OF ALL GRADING OPERATIONS AND PRIOR TO FINAL ACCEPTANCE. THE CONTRACTOR SHALL NOTIFY THE SOILS ENGINEER AT LEAST TWO (2) WORKING DAYS PRIOR TO DOING ANY SITE GRADING AND EARTHWORK INCLUDING CLEARING.

3. CLEARING AND GRUBBING

A. THE CONTRACTOR SHALL ACCEPT THE SITE IN ITS PRESENT CONDITION. ALL EXISTING PUBLIC IMPROVEMENTS SHALL BE PROTECTED. ANY IMPROVEMENTS DAMAGED SHALL BE REPLACED BY THE CONTRACTOR AS DIRECTED BY THE LOCAL JURISDICTION WITH NO EXTRA COMPENSATION.

B. ALL ABANDONED BUILDINGS AND FOUNDATIONS, TREE (EXCEPT THOSE SPECIFIED TO REMAIN FOR LANDSCAPING PURPOSES), FENCES, VEGETATION AND ANY SURFACE DEBRIS SHALL BE REMOVED AND DISPOSED OF OFF THE SITE BY THE CONTRACTOR.

C. ALL ABANDONED SEPTIC TANKS AND ANY OTHER SUBSURFACE STRUCTURES EXISTING IN PROPOSED DEVELOPMENT AREAS SHALL BE REMOVED PRIOR TO ANY GRADING OR FILL OPERATION. ALL APPURTENANT DRAIN FIELDS AND OTHER CONNECTING LINES MUST ALSO BE TOTALLY REMOVED.

D. ALL ABANDONED UNDERGROUND IRRIGATION OR UTILITY LINES SHALL BE REMOVED OR DEMOLISHED. THE APPROPRIATE FINAL DISPOSITION OF SUCH LINES DEPEND UPON THEIR DEPTH AND LOCATION AND THE METHOD OF REMOVAL OR DEMOLITION SHALL BE DETERMINED BY THE SOILS ENGINEER. ONE OF THE FOLLOWING METHODS WILL BE USED:

(1) EXCAVATE AND TOTALLY REMOVE THE UTILITY LINE FROM THE TRENCH.

(2) EXCAVATE AND CRUSH THE UTILITY LINE IN THE TRENCH.

(3) CAP THE ENDS OF THE UTILITY LINE WITH CONCRETE TO PREVENT THE ENTRANCE OF WATER. THE LOCATIONS AT WHICH THE UTILITY LINE WILL BE CAPPED WILL BE DETERMINED BY THE UTILITY DISTRICT ENGINEER. THE LENGTH OF THE CAP SHALL NOT BE LESS THAN FIVE FEET, AND THE CONCRETED MIX EMPLOYED SHALL HAVE MINIMUM SHRINKAGE.

4. SITE PREPARATION AND STRIPPING

A. ALL SURFACE ORGANICS SHALL BE STRIPPED AND REMOVED FROM BUILDING PADS, AREAS TO RECEIVE COMPACTED FILL AND PAVEMENT AREAS.

B. UPON THE COMPLETION OF THE ORGANIC STRIPPING OPERATION, THE GROUND SURFACE (NATIVE SOIL SUBGRADE) OVER THE ENTIRE AREA OF ALL BUILDING PADS, STREET AND PAVEMENT AREAS AND ALL AREAS TO RECEIVE COMPACTED FILL SHALL BE PLOWED OR SCARIFIED UNTIL THE SURFACE IS FREE OF RUTS, HUMMOCKS OR OTHER UNEVEN FEATURES WHICH MAY INHIBIT UNIFORM SOIL COMPACTION. THE GROUND SURFACE SHALL THEN BE DISCED OR BLADED TO A DEPTH OF AT LEAST 6 INCHES. UPON ENGINEER'S SATISFACTION, THE NEW SURFACE SHALL BE WATER CONDITIONED AND RECOMPACTED PER REQUIREMENTS FOR COMPACTING FILL MATERIAL.

5. EXCAVATION

A. UPON COMPLETION OF THE CLEARING AND GRUBBING, SITE PREPARATION AND STRIPPING, THE CONTRACTOR SHALL MAKE EXCAVATIONS TO LINES AND GRADES NOTED ON THE PLAN. WHERE REQUIRED BY THE SOILS ENGINEER, UNACCEPTABLE NATIVE SOILS OR UNENGINEERED FILL SHALL BE OVER EXCAVATED BELOW THE DESIGN GRADE. SEE PROJECT SOILS REPORT FOR DISCUSSION OF OVER EXCAVATION OF THE UNACCEPTABLE MATERIAL. RESULTING GROUND LINE SHALL BE SCARIFIED, MOISTURE-CONDITIONED AND RECOMPACTED AS SPECIFIED IN SECTION 4 OF THESE SPECIFICATIONS. COMPACTED FILL MATERIAL SHALL BE PLACED TO BRING GROUND LEVEL BACK TO DESIGN GRADE.

B. EXCAVATED MATERIALS SUITABLE FOR COMPACTED FILL MATERIAL SHALL BE UTILIZED IN MAKING THE REQUIRED COMPACTED FILLS. THOSE NATIVE MATERIALS CONSIDERED UNSUITABLE BY THE SOILS ENGINEER SHALL BE DISPOSED OF OFF THE SITE BY THE CONTRACTOR.

6. PLACING, SPREADING AND COMPACTING FILL MATERIAL

A. FILL MATERIALS

THE MATERIALS PROPOSED FOR USE AS COMPACTED FILL SHALL BE APPROVED BY THE SOILS ENGINEER BEFORE COMMENCEMENT OF GRADING OPERATIONS. THE NATIVE MATERIAL IS CONSIDERED SUITABLE FOR FILL; HOWEVER, ANY NATIVE MATERIAL DESIGNATED UNSUITABLE BY THE SOILS ENGINEER SHALL BE REMOVED FROM THE SITE BY THE CONTRACTOR. ANY IMPORTED MATERIAL SHALL BE APPROVED FOR USE BY THE SOILS ENGINEER, IN WRITING, BEFORE BEING IMPORTED TO THE SITE AND SHALL POSSESS SUFFICIENT FINES TO PROVIDE A COMPETENT SOIL MATRIX AND SHALL BE FREE OF VEGETATIVE AND ORGANIC MATTER AND OTHER DELETERIOUS MATERIALS. ALL FILL VOIDS SHALL BE FILLED AND PROPERLY COMPACTED. NO ROCKS LARGER THAN THREE INCHES IN DIAMETER SHALL BE PERMITTED.

B. FILL CONSTRUCTION

THE SOILS ENGINEER SHALL APPROVE THE NATIVE SOIL SUBGRADE BEFORE PLACEMENT OF ANY COMPACTED FILL MATERIAL. UNACCEPTABLE NATIVE SOIL SHALL BE REMOVED AS DIRECTED BY THE SOILS ENGINEER. THE RESULTING GROUND LINE SHALL BE SCARIFIED MOISTURE CONDITIONED AND RECOMPACTED AS SPECIFIED IN SECTION 4 OF THESE SPECIFICATIONS. COMPACTED FILL MATERIAL SHALL BE PLACED TO BRING GROUND LEVEL BACK TO DESIGN GRADE. GROUND PREPARATION SHALL BE FOLLOWED CLOSELY BY FILL PLACEMENT TO PREVENT DRYING OUT OF THE SUBSOIL BEFORE PLACEMENT OF THE FILL.

THE APPROVED FILL MATERIALS SHALL BE PLACED IN UNIFORM HORIZONTAL LAYERS NO THICKER THAN 8" IN LOOSE THICKNESS. LAYERS SHALL BE SPREAD EVENLY AND SHALL BE THOROUGHLY BLADE MIXED DURING THE SPREADING TO ENSURE UNIFORMITY OF MATERIAL IN EACH LAYER. THE SCARIFIED SUBGRADE AND FILL MATERIAL SHALL BE MOISTURE CONDITIONED TO AT LEAST OPTIMUM MOISTURE. WHEN THE MOISTURE CONTENT OF THE FILL IS BELOW THAT SPECIFIED, WATER SHALL BE ADDED UNTIL THE MOISTURE DURING THE COMPACTION PROCESS. WHEN THE MOISTURE CONTENT OF THE FILL IS ABOVE THAT SPECIFIED, THE FILL MATERIAL SHALL BE AERATED BY BLADING OR OTHER SATISFACTORY METHODS UNTIL THE MOISTURE CONTENT IS AS SPECIFIED.

AFTER EACH LAYER HAS BEEN PLACED, MIXED, SPREAD EVENLY AND MOISTURE CONDITIONED, IT SHALL BE COMPACTED TO AT LEAST THE SPECIFIED DENSITY.

THE FILL OPERATION SHALL BE CONTINUED IN COMPACTED LAYERS AS SPECIFIED ABOVE UNTIL THE FILL HAS BEEN BROUGHT TO THE FINISHED SLOPES AND GRADES AS SHOWN ON THE PLANS. NO LAYER SHALL BE ALLOWED TO DRY OUT BEFORE SUBSEQUENT LAYERS ARE PLACED.

COMPACTION EQUIPMENT SHALL BE OF SUCH DESIGN THAT IT WILL BE ABLE TO COMPACT THE FILL TO THE SPECIFIED MINIMUM COMPACTION WITHIN THE SPECIFIED MOISTURE CONTENT RANGE. COMPACTION OF EACH LAYER SHALL BE CONTINUOUS OVER ITS ENTIRE AREA UNTIL THE REQUIRED MINIMUM DENSITY HAS BEEN OBTAINED.

7. CUT OR FILL SLOPES

ALL CONSTRUCTED SLOPES, BOTH CUT AND FILL, SHALL BE NO STEEPER THAN 2 TO 1 (HORIZONTAL TO VERTICAL). DURING THE GRADING OPERATION, COMPACTED FILL SLOPES SHALL BE OVERFILLED BY AT LEAST ONE FOOT HORIZONTALLY AT THE COMPLETION OF THE GRADING OPERATIONS, THE EXCESS FILL EXISTING ON THE SLOPES SHALL BE BLADED OFF TO CREATE THE FINISHED SLOPE EMBANKMENT. ALL CUT AND FILL SLOPES SHALL BE TRACK WALKED AFTER BEING BROUGHT TO FINISH GRADE AND THEN BE PLANTED WITH EROSION CONTROL SLOPE PLANTING. THE SOILS ENGINEER SHALL REVIEW ALL CUT SLOPES TO DETERMINE IF ANY ADVERSE GEOLOGIC CONDITIONS ARE EXPOSED. IF SUCH CONDITIONS DO OCCUR, THE SOILS ENGINEER SHALL RECOMMEND THE APPROPRIATE MITIGATION MEASURES AT THE TIME OF THEIR DETECTION.

8. SEASONAL LIMITS AND DRAINAGE CONTROL

FILL MATERIALS SHALL NOT BE PLACED, SPREAD OR COMPACTED WHILE IT IS AT AN UNSUITABLY HIGH MOISTURE CONTENT OR DURING OTHERWISE UNFAVORABLE CONDITIONS. WHEN THE WORK IS INTERRUPTED FOR ANY REASON THE FILL OPERATIONS SHALL NOT BE RESUMED UNTIL FIELD TEST PERFORMED BY THE SOILS ENGINEER INDICATE THAT THE MOISTURE CONDITIONS IN AREAS TO BE FILLED ARE AS PREVIOUSLY SPECIFIED. ALL EARTH MOVING AND WORKING OPERATIONS SHALL BE CONTROLLED TO PREVENT WATER FROM RUNNING INTO EXCAVATED AREAS. ALL EXCESS WATER SHALL BE PROMPTLY REMOVED AND THE SITE KEPT DRY.

9. DUST CONTROL

THE CONTRACTOR SHALL TAKE ALL STEPS NECESSARY FOR THE ALLEVIATION OR PREVENTION OF ANY DUST NUISANCE ON OR ABOUT THE SITE CAUSED BY THE CONTRACTOR'S OPERATION EITHER DURING THE PERFORMANCE OF THE GRADING OR RESULTING FROM THE CONDITION IN WHICH THE CONTRACTOR LEAVES THE SITE. THE CONTRACTOR SHALL ASSUME ALL LIABILITY INCLUDING COURT COST OF CO-DEFENDANTS FOR ALL CLAIMS RELATED TO DUST OR WIND-BLOWN MATERIALS ATTRIBUTABLE TO HIS WORK. COST FOR THIS ITEM OF WORK IS TO BE INCLUDED IN THE EXCAVATION ITEM AND NO ADDITIONAL COMPENSATION SHALL BE ALLOWED.

10. INDEMNITY

THE CONTRACTOR WILL HOLD HARMLESS, INDEMNIFY AND DEFEND THE ENGINEER, THE OWNER AND HIS CONSULTANTS AND EACH OF THEIR OFFICERS AND EMPLOYEES AND AGENTS, FROM ANY AND ALL LIABILITY CLAIMS, LOSSES OR DAMAGE ARISING OR ALLEGED TO HEREIN, BUT NOT INCLUDING THE SOLE NEGLIGENCE OF THE OWNER, THE ARCHITECT, THE ENGINEER AND HIS CONSULTANTS AND EACH OF THEIR OFFICERS AND EMPLOYEES AND AGENTS.

11. SAFETY

IN ACCORDANCE WITH GENERALLY ACCEPTED CONSTRUCTION PRACTICES, THE CONTRACTOR WILL BE SOLELY AND COMPLETELY RESPONSIBLE FOR CONDITIONS OF THE JOB SITE. INCLUDING SAFETY OF ALL PERSONS AND PROPERTY DURING PERFORMANCE OF THE WORK. THIS REQUIREMENT WILL APPLY CONTINUOUSLY AND NOT BE LIMITED TO NORMAL WORKING HOURS.

THE DUTY OF THE ENGINEERS TO CONDUCT CONSTRUCTION REVIEW OF THE CONTRACTOR'S PERFORMANCE IS NOT INTENDED TO INCLUDE REVIEW OF THE ADEQUACY OF THE CONTRACTOR'S SAFETY MEASURES, IN, ON OR NEAR THE CONSTRUCTION SITE.

12. GUARANTEE

NEITHER THE FINAL PAYMENT, NOR THE PROVISIONS IN THE CONTRACT, NOR PARTIAL, NOR ENTIRE USE OR OCCUPANCY OF THE PREMISES BY THE OWNER SHALL CONSTITUTE AN ACCEPTANCE OF THE WORK NOT DONE IN ACCORDANCE WITH THE CONTRACT OR RELIEVES THE CONTRACTOR OF LIABILITY IN RESPECT TO ANY EXPRESS WARRANTIES OR RESPONSIBILITY FOR FAULTY MATERIAL OR WORKMANSHIP.

THE CONTRACTOR SHALL REMEDY ANY DEFECTS IN WORK AND PAY FOR ANY DAMAGE TO OTHER WORK RESULTING THERE FROM WHICH SHALL APPEAR WITHIN A PERIOD OF ONE (1) CALENDAR YEAR FROM THE DATE OF FINAL ACCEPTANCE OF THE WORK.

13. TRENCH BACKFILL

EITHER THE ON-SITE INORGANIC SOIL OR APPROVED IMPORTED SOIL MAY BE USED AS TRENCH BACKFILL. THE BACKFILL MATERIAL SHALL BE MOISTURE CONDITIONED PER THESE SPECIFICATIONS AND SHALL BE PLACED IN LIFTS OF NOT MORE THAN SIX INCHES IN HORIZONTAL UNCOMPACTED LAYERS AND BE COMPACTED BY MECHANICAL MEANS TO A MINIMUM OF 90% RELATIVE COMPACTION. IMPORTED SAND MAY BE USED FOR TRENCH BACKFILL MATERIAL PROVIDED IT IS COMPACTED TO AT LEAST 90% RELATIVE COMPACTION. WATER JETTING ASSOCIATED WITH COMPACTION USING VIBRATORY EQUIPMENT WILL BE PERMITTED ONLY WITH IMPORTED SAND BACKFILL WITH THE APPROVAL OF THE SOILS ENGINEER. ALL PIPES SHALL BE BEDDED WITH SAND EXTENDING FROM THE TRENCH BOTTOM TO TWELVE INCHES ABOVE THE PIPE. SAND BEDDING IS TO BE COMPACTED AS SPECIFIED ABOVE FOR SAND BACKFILL.

14. EROSION CONTROL

A. ALL GRADING, EROSION AND SEDIMENT CONTROL AND RELATED WORK UNDERTAKEN ON THIS SITE IS SUBJECT TO ALL TERMS AND CONDITIONS OF THE COUNTY GRADING ORDINANCE AND MADE A PART HEREOF BY REFERENCE.

B. THE CONTRACTOR WILL BE LIABLE FOR ANY AND ALL DAMAGES TO ANY PUBLICLY OWNED AND MAINTAINED ROAD CAUSED BY THE AFORESAID CONTRACTOR'S GRADING ACTIVITIES, AND SHALL BE RESPONSIBLE FOR THE CLEANUP OF ANY MATERIAL SPILLED ON ANY PUBLIC ROAD ON THE HAUL ROUTE.

C. THE EROSION CONTROL MEASURES ARE TO BE OPERABLE DURING THE RAINY SEASON, GENERALLY FROM OCTOBER FIRST TO APRIL FIFTEENTH. EROSION CONTROL PLANTING IS TO BE COMPLETED BY OCTOBER FIRST. NO GRADING OR UTILITY TRENCHING SHALL OCCUR BETWEEN OCTOBER FIRST AND APRIL FIFTEENTH UNLESS AUTHORIZED BY THE LOCAL JURISDICTION.

D. ALL EROSION CONTROL MEASURES SHALL BE MAINTAINED UNTIL DISTURBED AREAS ARE STABILIZED AND CHANGES TO THIS EROSION AND SEDIMENT CONTROL PLAN SHALL BE MADE TO MEET FIELD CONDITIONS ONLY WITH THE APPROVAL OF OR AT THE DIRECTION OF THE SOILS ENGINEER.

E. DURING THE RAINY SEASON, ALL PAVED AREAS SHALL BE KEPT CLEAR OF EARTH MATERIAL AND DEBRIS. THE SITE SHALL BE MAINTAINED SO AS TO MINIMIZE SEDIMENT-LADEN RUNOFF TO ANY STORM DRAINAGE SYSTEM.

F. ALL EROSION CONTROL FACILITIES MUST BE INSPECTED AND REPAIRED AT THE END OF EACH WORKING DAY DURING THE RAINY SEASON.

G. WHEN NO LONGER NECESSARY AND PRIOR TO FINAL ACCEPTANCE OF DEVELOPMENT, SEDIMENT BASINS SHALL BE REMOVED OR OTHERWISE DEACTIVATED AS REQUIRED BY THE LOCAL JURISDICTION.

H. A CONSTRUCTION ENTRANCE SHALL BE PROVIDED AT ANY POINT OF EGRESS FROM THE SITE TO ROADWAY. A CONSTRUCTION ENTRANCE SHOULD BE COMPOSED OF COARSE DRAIN ROCK (2" TO 3") MINIMUM DIAMETER) AT LEAST EIGHT INCHES THICK BY FIFTY (50) FEET LONG BY TWENTY (20) FEET WIDE UNLESS SHOWN OTHERWISE ON PLAN AND SHALL BE MAINTAINED UNTIL THE SITE IS PAVED.

I. ALL AREAS SPECIFIED FOR HYDROSEEDING SHALL BE NOZZLE PLANTED WITH STABILIZATION MATERIAL CONSISTING OF FIBER, SEED, FERTILIZER AND WATER, MIXED AND APPLIED IN THE FOLLOWING PROPORTIONS:

FIBER, 2000 LBS/ACRE
SEED, 200 LBS/ACRE (SEE NOTE J, BELOW)
FERTILIZER (11-8-4), 500 LBS/ACRE
WATER, AS REQUIRED FOR APPLICATION

J. SEED MIX SHALL BE PER CALTRANS STANDARDS.

K. WATER UTILIZED IN THE STABILIZATION MATERIAL SHALL BE OF SUCH QUALITY THAT IT WILL PROMOTE GERMINATION AND STIMULATE GROWTH OF PLANTS. IT SHALL BE FREE OF POLLUTANT MATERIALS AND WEED SEED.

L. HYDROSEEDING SHALL CONFORM TO THE PROVISIONS OF SECTION 20, EROSION CONTROL AND HIGHWAY PLANTING", OF THE STANDARD SPECIFICATIONS OF THE STATE OF CALIFORNIA DEPARTMENT OF TRANSPORTATION, AS LAST REVISED.

M. A DISPERSING AGENT MAY BE ADDED TO THE HYDROSEEDING MATERIAL, PROVIDED THAT THE CONTRACTOR FURNISHES SUITABLE EVIDENCE THAT THE ADDITIVE WILL NOT ADVERSELY AFFECT THE PERFORMANCE OF THE SEEDING MIXTURE.

N. STABILIZATION MATERIALS SHALL BE APPLIED AS SOON AS PRACTICABLE AFTER COMPLETION OF GRADING OPERATIONS AND PRIOR TO THE ONSET OF WINTER RAINS, OR AT SUCH OTHER TIME AS DIRECTED BY THE TOWN ENGINEER. THE MATERIAL SHALL BE APPLIED BEFORE INSTALLATION OF OTHER LANDSCAPING MATERIALS SUCH AS TREES, SHRUBS AND GROUND COVERS.

O. THE STABILIZATION MATERIAL SHALL BE APPLIED WITHIN 4-HOURS AFTER MIXING. MIXED MATERIAL NOT USED WITHIN 4-HOURS SHALL BE REMOVED FROM THE SITE.

P. THE CONTRACTOR SHALL MAINTAIN THE SOIL STABILIZATION MATERIAL AFTER PLACEMENT. THE TOWN ENGINEER MAY REQUIRE SPRAY APPLICATION OF WATER OR OTHER MAINTENANCE ACTIVITIES TO ASSURE THE EFFECTIVENESS OF THE STABILIZATION PROCESS. APPLICATION OF WATER SHALL BE ACCOMPLISHED USING NOZZLES THAT PRODUCE A SPRAY THAT DOES NOT CONCENTRATE OR WASH AWAY THE STABILIZATION MATERIALS.

15. CLEANUP

THE CONTRACTOR MUST MAINTAIN THE SITE CLEAN, SAFE AND IN USABLE CONDITION. ANY SPILLS OF SOIL, ROCK OR CONSTRUCTION MATERIAL MUST BE REMOVED FROM THE SITE BY THE CONTRACTOR DURING CONSTRUCTION AND UPON COMPLETION OF THE PROJECT. COST FOR THIS ITEM OF WORK SHALL BE INCLUDED IN THE EXCAVATION AND COMPACTION ITEM AND NO ADDITIONAL COMPENSATION SHALL BE ALLOWED.

NOTE:
THESE NOTES ARE INTENDED TO BE USED AS A GENERAL GUIDELINE. THE REFERENCED SOILS REPORT FOR THE PROJECT AND GOVERNING AGENCY GRADING ORDINANCE SHALL SUPERSEDE THESE NOTES. THE SOILS ENGINEER MAY MAKE ON-SITE RECOMMENDATIONS DURING GRADING OPERATIONS.

REGISTERED PROFESSIONAL ENGINEER
PETER CARLINO
No. C79555
CIVIL
STATE OF CALIFORNIA
ORIGINAL SIGNATURES IN BLUE INK

LEA & BRAZE ENGINEERING, INC.
CIVIL ENGINEERS • LAND SURVEYORS
MAIN OFFICE:
2495 INDUSTRIAL PKWY WEST
HAYWARD, CALIFORNIA 94545
(510) 887-4086
REGIONAL OFFICES:
ROSEVILLE
DUBLIN
SAN JOSE
WWW.LEABRAZE.COM

BADHWAR RESIDENCE
12830 DEER CREEK LANE
LOS ALTOS HILLS, CALIFORNIA
SANTA CLARA COUNTY
APN: 175-43-050

GRADING SPECIFICATIONS

REVISIONS	BY
–	–
–	–
–	–
–	–
–	–

JOB NO: 2200166
DATE: 06-25-20
S

PURPOSE:

THE PURPOSE OF THIS PLAN IS TO STABILIZE THE SITE TO PREVENT EROSION OF GRADED AREAS AND TO PREVENT SEDIMENTATION FROM LEAVING THE CONSTRUCTION AREA AND AFFECTING NEIGHBORING SITES, NATURAL AREAS, PUBLIC FACILITIES OR ANY OTHER AREA THAT MIGHT BE AFFECTED BY SEDIMENTATION. ALL MEASURES SHOWN ON THIS PLAN SHOULD BE CONSIDERED THE MINIMUM REQUIREMENTS NECESSARY. SHOULD FIELD CONDITIONS DICTATE ADDITIONAL MEASURES, SUCH MEASURES SHALL BE PER CALIFORNIA REGIONAL WATER QUALITY CONTROL BOARD'S FIELD MANUAL FOR EROSION AND SEDIMENTATION CONTROL AND THE CALIFORNIA STORM WATER QUALITY ASSOCIATION BEST MANAGEMENT PRACTICES HANDBOOK FOR CONSTRUCTION. LEA & BRAZE ENGINEERING SHOULD BE NOTIFIED IMMEDIATELY SHOULD CONDITIONS CHANGE.

EROSION CONTROL NOTES:

1. IT SHALL BE THE OWNER'S/CONTRACTOR'S RESPONSIBILITY TO MAINTAIN CONTROL OF THE ENTIRE CONSTRUCTION OPERATION AND TO KEEP THE ENTIRE SITE IN COMPLIANCE WITH THIS EROSION CONTROL PLAN.
2. THE INTENTION OF THIS PLAN IS FOR INTERIM EROSION AND SEDIMENT CONTROL ONLY. ALL EROSION CONTROL MEASURES SHALL CONFORM TO CALIFORNIA REGIONAL WATER QUALITY CONTROL BOARD'S FIELD MANUAL FOR EROSION AND SEDIMENTATION CONTROL, THE CALIFORNIA STORM WATER QUALITY ASSOCIATION BEST MANAGEMENT PRACTICES HANDBOOK FOR CONSTRUCTION, AND THE LOCAL GOVERNING AGENCY FOR THIS PROJECT.
3. OWNER/CONTRACTOR SHALL BE RESPONSIBLE FOR MONITORING EROSION AND SEDIMENT CONTROL MEASURES PRIOR TO, DURING, AND AFTER STORM EVENTS. PERSON IN CHARGE OF MAINTAINING EROSION CONTROL MEASURES SHOULD WATCH LOCAL WEATHER REPORTS AND ACT APPROPRIATELY TO MAKE SURE ALL NECESSARY MEASURES ARE IN PLACE.
4. SANITARY FACILITIES SHALL BE MAINTAINED ON THE SITE AT ALL TIMES.
5. DURING THE RAINY SEASON, ALL PAVED AREAS SHALL BE KEPT CLEAR OF EARTH MATERIAL AND DEBRIS. THE SITE SHALL BE MAINTAINED SO AS TO MINIMIZE SEDIMENT-LADEN RUNOFF TO ANY STORM DRAINAGE SYSTEM, INCLUDING EXISTING DRAINAGE SWALES AND WATERCOURSES.
6. CONSTRUCTION OPERATIONS SHALL BE CARRIED OUT IN SUCH A MANNER THAT EROSION AND WATER POLLUTION WILL BE MINIMIZED. COMPLIANCE WITH FEDERAL, STATE AND LOCAL LAWS CONCERNING POLLUTION SHALL BE MAINTAINED AT ALL TIMES.
7. CONTRACTOR SHALL PROVIDE DUST CONTROL AS REQUIRED BY THE APPROPRIATE FEDERAL, STATE AND LOCAL AGENCY REQUIREMENTS.
8. ALL MATERIALS NECESSARY FOR THE APPROVED EROSION CONTROL MEASURES SHALL BE IN PLACE BY OCTOBER 15TH.
9. EROSION CONTROL SYSTEMS SHALL BE INSTALLED AND MAINTAINED THROUGHOUT THE RAINY SEASON, OR FROM OCTOBER 15TH THROUGH APRIL 15TH, WHICHEVER IS LONGER.
10. IN THE EVENT OF RAIN, ALL GRADING WORK IS TO CEASE IMMEDIATELY AND THE SITE IS TO BE SEALED IN ACCORDANCE WITH THE APPROVAL EROSION CONTROL MEASURES AND APPROVED EROSION CONTROL PLAN.
11. THE CONTRACTOR SHALL BE RESPONSIBLE FOR CHECKING AND REPAIRING EROSION CONTROL SYSTEMS AFTER EACH STORM.
12. ADDITIONAL EROSION CONTROL MEASURES MAY BE REQUIRED BY LOCAL JURISDICTION'S ENGINEERING DEPARTMENT OR BUILDING OFFICIALS.
13. MEASURES SHALL BE TAKEN TO COLLECT OR CLEAN ANY ACCUMULATION OR DEPOSIT OF DIRT, MUD, SAND, ROCKS, GRAVEL OR DEBRIS ON THE SURFACE OF ANY STREET, ALLEY OR PUBLIC PLACE OR IN ANY PUBLIC STORM DRAIN SYSTEMS. THE REMOVAL OF AFORESAID SHALL BE DONE BY STREET SWEEPING OR HAND SWEEPING. WATER SHALL NOT BE USED TO WASH SEDIMENTS INTO PUBLIC OR PRIVATE DRAINAGE FACILITIES.
14. EROSION CONTROL MEASURES SHALL BE ON-SITE FROM SEPTEMBER 15TH THRU APRIL 15TH.
15. ALL EROSION CONTROL MEASURES SHALL BE INSTALLED AND MAINTAINED THROUGHOUT THE RAINY SEASON OR FROM OCTOBER 1ST THROUGH APRIL 30TH, WHICHEVER IS GREATER.
16. PLANS SHALL BE DESIGNED TO MEET C3 REQUIREMENTS OF THE MUNICIPAL STORMWATER REGIONAL PERMIT("MRP") NPDES PERMIT CAS 612008.
17. THE CONTRACTOR TO NPDES (NATIONAL POLLUTION DISCHARGE ELIMINATION SYSTEM) BEST MANAGEMENT PRACTICES (BMP) FOR SEDIMENTATION PREVENTION AND EROSION CONTROL TO PREVENT DELETERIOUS MATERIALS OR POLLUTANTS FROM ENTERING THE TOWN OR COUNTY STORM DRAIN SYSTEMS.
18. THE CONTRACTOR MUST INSTALL ALL EROSION AND SEDIMENT CONTROL MEASURES PRIOR TO THE INCEPTION OF ANY WORK ONSITE AND MAINTAIN THE MEASURES UNTIL THE COMPLETION OF ALL LANDSCAPING.
19. THE CONTRACTOR SHALL MAINTAIN ADJACENT STREETS IN A NEAT, CLEAN DUST FREE AND SANITARY CONDITION AT ALL TIMES AND TO THE SATISFACTION OF THE TOWN INSPECTOR. THE ADJACENT STREET SHALL AT ALL TIMES BE KEPT CLEAN OF DEBRIS, WITH DUST AND OTHER NUISANCE BEING CONTROLLED AT ALL TIMES. THE CONTRACTOR BE RESPONSIBLE FOR ANY CLEAN UP ON ADJACENT STREETS AFFECTED BY THE BY THEIR CONSTRUCTION, METHOD OF STREET CLEANING SHALL BE BY DRY SWEEPING OF ALL PAVED AREAS. NO STOCKPILING OF BUILDING MATERIALS WITHIN THE TOWN RIGHT-OF-WAY.
20. SEDIMENTS AND OTHER MATERIALS SHALL NOT BE TRACKED FROM THE SITE BY VEHICLE TRAFFIC. THE CONTRACTOR SHALL INSTALL A STABILIZED CONSTRUCTION ENTRANCE PRIOR TO THE INSPECTION OF ANY WORK ONSITE AND MAINTAIN IT FOR THE DURATION OF THE CONSTRUCTION PROCESS SO AS TO NOT INHIBIT SEDIMENTS FROM BEING DEPOSITED INTO THE PUBLIC RIGHT-OF-WAY UNTIL THE COMPLETION OF ALL LANDSCAPING.
21. THE CONTRACTOR SHALL PROTECT DOWN SLOPE DRAINAGE COURSES, STREAMS AND STORM DRAINS WITH ROCK FILLED SAND BAGS, TEMPORARY SWALES, SILT FENCES, AND EARTH PERMS IN CONJUNCTION OF ALL LANDSCAPING.
22. STOCKPILED MATERIALS SHALL BE COVERED WITH VISQUEEN OR A TARPAULIN UNTIL THE MATERIAL IS REMOVED FROM THE SITE. ANY REMAINING BARE SOIL THAT EXISTS AFTER THE STOCKPILE HAS BEEN REMOVED SHALL BE COVERED UNTIL A NATURAL GROUND COVER IS ESTABLISHED OR IT IS SEEDED OR PLANTED TO PROVIDE GROUND COVER PRIOR TO THE FALL RAINY SEASON.
23. EXCESS OR WASTE CONCRETE MUST NOT BE WASHED INTO THE PUBLIC RIGHT-OF-WAYOR ANY OTHER DRAINAGE SYSTEM. PROVISIONS SHALL BE MADE TO RETAIN CONCRETE WASTES ON SITE UNTIL THEY CAN BE DISPOSED OF AS SOLID WASTE.
24. TRASH AND CONSTRUCTION RELATED SOLID WASTES MUST BE DEPOSITED INTO A COVERED RECEPTACLE TO PREVENT CONTAMINATION AND DISPERSAL BY WIND

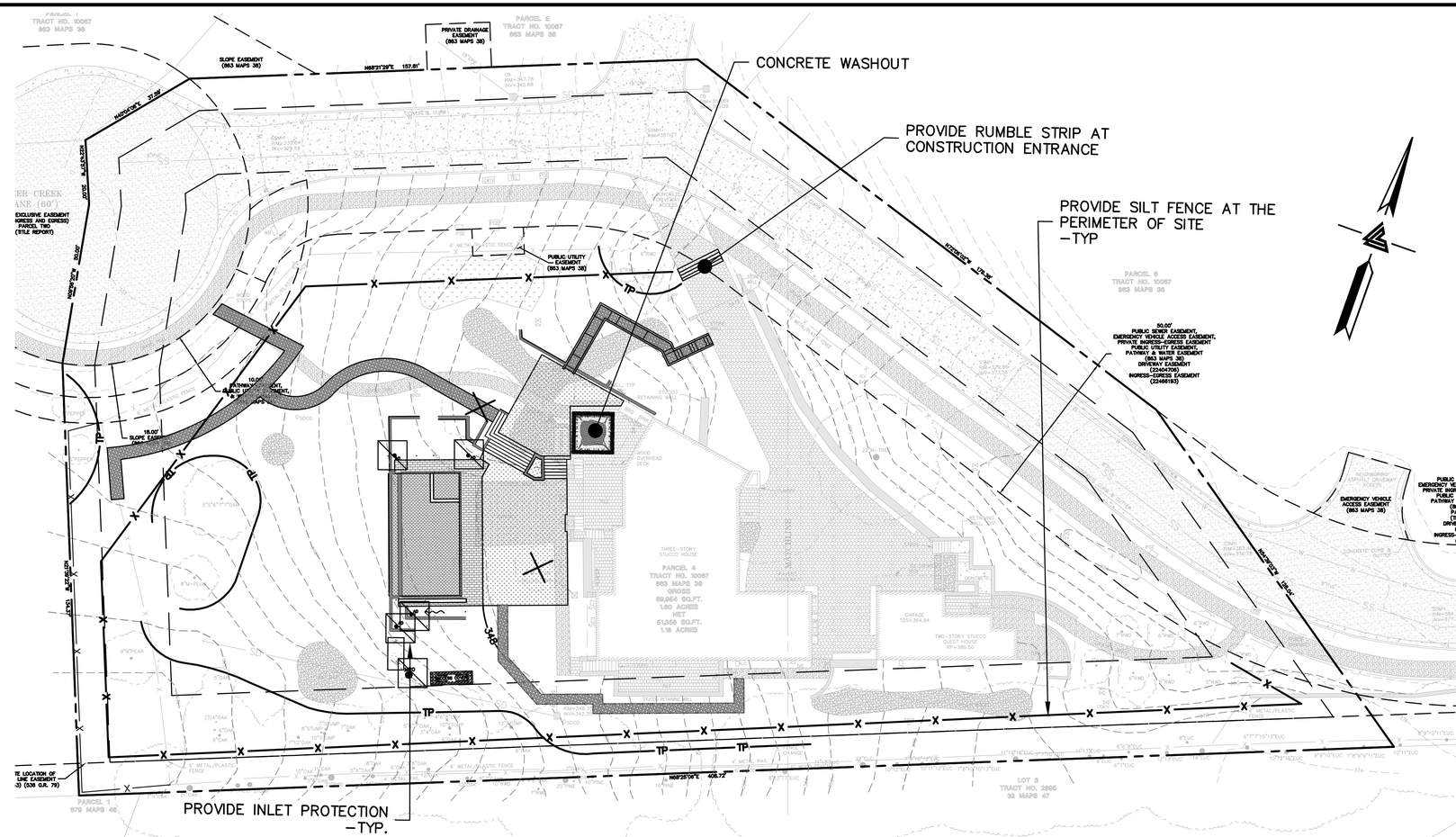

EROSION CONTROL NOTES CONTINUED:

24. FUELS, OILS, SOLVENTS AND OTHER TOXIC MATERIALS MUST BE STORED IN ACCORDANCE WITH THEIR LISTING AND ARE NOT TO CONTAMINATE THE SOIL AND SURFACE WATERS. ALL APPROVED STORAGE CONTAINERS ARE TO BE PROTECTED FROM THE WEATHER. SPILLS MUST BE CLEANED UP IMMEDIATELY AND DISPOSED OF IN A PROPER MANNER. SPILLS MUST NOT BE WASHED INTO THE DRAINAGE SYSTEM,
25. DUST CONTROL SHALL BE DONE BY WATERING AND AS OFTEN AS REQUIRED BY THE TOWN INSPECTOR.
26. SILT FENCE(S) AND/OR FIBER ROLL(S) SHALL BE INSTALLED PRIOR TO SEPTEMBER 15TH AND SHALL REMAIN IN PLACE UNTIL THE LANDSCAPING GROUND COVER IS INSTALLED. CONTRACTOR SHALL CONTINUOUSLY MONITOR THESE MEASURES, FOLLOWING AND DURING ALL RAIN EVENTS,TO PUBLIC OWNED FACILITIES.

PERIODIC MAINTENANCE:

1. MAINTENANCE IS TO BE PERFORMED AS FOLLOWS:
   - A. DAMAGES CAUSED BY SOIL EROSION OR CONSTRUCTION SHALL BE REPAIRED AT THE END OF EACH WORKING DAY.
   - B. SWALES SHALL BE INSPECTED PERIODICALLY AND MAINTAINED AS NEEDED.
   - C. SEDIMENT TRAPS, BERMS, AND SWALES ARE TO BE INSPECTED AFTER EACH STORM AND REPAIRS MADE AS NEEDED.
   - D. SEDIMENT SHALL BE REMOVED AND SEDIMENT TRAP RESTORED TO ITS ORIGINAL DIMENSIONS WHEN SEDIMENT HAS ACCUMULATED TO A DEPTH OF 1' FOOT.
   - E. SEDIMENT REMOVED FROM TRAP SHALL BE DEPOSITED IN A SUITABLE AREA AND IN SUCH A MANNER THAT IT WILL NOT ERODE.
   - F. RILLS AND GULLIES MUST BE REPAIRED.
2. GRAVEL BAG INLET PROTECTION SHALL BE CLEANED OUT WHENEVER SEDIMENT DEPTH IS ONE HALF THE HEIGHT OF ONE GRAVEL BAG.
3. STRAW ROLLS SHALL BE PERIODICALLY CHECKED TO ASSURE PROPER FUNCTION AND CLEANED OUT WHENEVER THE SEDIMENT DEPTH REACHED HALF THE HEIGHT OF THE ROLL.
4. SILT FENCE SHALL BE PERIODICALLY CHECKED TO ASSURE PROPER FUNCTION AND CLEANED OUT WHENEVER THE SEDIMENT DEPTH REACHES ONE FOOT IN HEIGHT.
5. CONSTRUCTION ENTRANCE SHALL BE REGRAVELED AS NECESSARY FOLLOWING SILT/SOIL BUILDUP.
6. ANY OTHER EROSION CONTROL MEASURES SHOULD BE CHECKED AT REGULAR INTERVALS TO ASSURE PROPER FUNCTION

EROSION CONTROL MEASURES:

1. THE FACILITIES SHOWN ON THIS PLAN ARE DESIGNED TO CONTROL EROSION AND SEDIMENT DURING THE RAINY SEASON, OCTOBER 15TH TO APRIL 15. EROSION CONTROL FACILITIES SHALL BE IN PLACE PRIOR TO OCTOBER 15TH OF ANY YEAR. GRADING OPERATIONS DURING THE RAINY SEASON WHICH LEAVE DENUDED SLOPES SHALL BE PROTECTED WITH EROSION CONTROL MEASURES IMMEDIATELY FOLLOWING GRADING ON THE SLOPES.
2. SITE CONDITIONS AT TIME OF PLACEMENT OF EROSION CONTROL MEASURES WILL VARY. APPROPRIATE ACTION INCLUDING TEMPORARY SWALES, INLETS, HYDROSEEDING, STRAW BALES, ROCK SACKS, ETC. SHALL BE TAKEN TO PREVENT EROSION AND SEDIMENTATION FROM LEAVING SITE. EROSION CONTROL MEASURES SHALL BE ADJUSTED AS THE CONDITIONS CHANGE AND THE NEED OF CONSTRUCTION SHIFT.
3. CONSTRUCTION ENTRANCES SHALL BE INSTALLED PRIOR TO COMMENCEMENT OF GRADING. ALL CONSTRUCTION TRAFFIC ENTERING ONTO THE PAVED ROADS MUST CROSS THE STABILIZED CONSTRUCTION ENTRANCES. CONTRACTOR SHALL MAINTAIN STABILIZED ENTRANCE AT EACH VEHICLE ACCESS POINT TO EXISTING PAVED STREETS. ANY MUD OR DEBRIS TRACKED ONTO PUBLIC STREETS SHALL BE REMOVED DAILY AND AS REQUIRED BY THE GOVERNING AGENCY.
4. ALL EXPOSED SLOPES THAT ARE NOT VEGETATED SHALL BE HYDROSEEDED. IF HYDROSEEDING IS NOT USED OR IS NOT EFFECTIVE BY OCTOBER 15, THEN OTHER IMMEDIATE METHODS SHALL BE IMPLEMENTED, SUCH AS EROSION CONTROL BLANKETS, OR A THREE-STEP APPLICATION OF 1) SEED, MULCH, FERTILIZER 2) BLOWN STRAW 3) TACKIFIER AND MULCH. HYDROSEEDING SHALL BE IN ACCORDANCE WITH THE PROVISIONS OF SECTION 20" EROSION CONTROL AND HIGHWAY PLANTING" OF THE STANDARD SPECIFICATION OF THE STATE OF CALIFORNIA DEPARTMENT OF TRANSPORTATION, AS LAST REVISED. REFER TO THE EROSION CONTROL SECTION OF THE GRADING SPECIFICATIONS THAT ARE A PART OF THIS PLAN SET FOR FURTHER INFORMATION.
5. INLET PROTECTION SHALL BE INSTALLED AT OPEN INLETS TO PREVENT SEDIMENT FROM ENTERING THE STORM DRAIN SYSTEM. INLETS NOT USED IN CONJUNCTION WITH EROSION CONTROL ARE TO BE BLOCKED TO PREVENT ENTRY OF SEDIMENT. MINIMUM INLET PROTECTION SHALL CONSIST OF A ROCK SACKS OR AS SHOWN ON THIS PLAN
6. THIS EROSION AND SEDIMENT CONTROL PLAN MAY NOT COVER ALL THE SITUATIONS THAT MAY ARISE DURING CONSTRUCTION DUE TO UNANTICIPATED FIELD CONDITIONS. VARIATIONS AND ADDITIONS MAY BE MADE TO THIS PLAN IN THE FIELD. A REPRESENTATIVE OF LEA & BRAZE ENGINEERING SHALL PERFORM A FIELD REVIEW AND MAKE RECOMMENDATIONS AS NEEDED. CONTRACTOR IS RESPONSIBLE TO NOTIFY LEA & BRAZE ENGINEERING AND THE GOVERNING AGENCY OF ANY CHANGES.
7. THE EROSION CONTROL MEASURES SHALL CONFORM TO THE LOCAL JURISDICTION'S STANDARDS AND THE APPROVAL OF THE LOCAL JURISDICTION'S ENGINEERING DEPARTMENT.
8. STRAW ROLLS SHALL BE PLACED AT THE TOE OF SLOPES AND ALONG THE DOWN SLOPE PERIMETER OF THE PROJECT. THEY SHALL BE PLACED AT 25 FOOT INTERVALS ON GRADED SLOPES. PLACEMENT SHALL RUN WITH THE CONTOURS AND ROLLS SHALL BE TIGHTLY END BUTTED. CONTRACTOR SHALL REFER TO MANUFACTURES SPECIFICATIONS FOR PLACEMENT AND INSTALLATION INSTRUCTIONS.

REFERENCES:

1. CALIFORNIA REGIONAL WATER QUALITY CONTROL BOARD'S FIELD MANUAL FOR EROSION AND SEDIMENTATION CONTROL
2. CALIFORNIA STORM WATER QUALITY ASSOCIATION BEST MANAGEMENT PRACTICES HANDBOOK FOR CONSTRUCTION

EROSION CONTROL LEGEND

- GRAVEL BAG
- SEDIMENTATION BASIN
- INLET PROTECTION
- STRAW ROLL
- SILT FENCE
- CONCRETE WASHOUT
- CONSTRUCTION ENTRANCE/RUMBLE STRIP
- TREE PROTECTION

NOTE:
SEAL ALL OTHER INLETS NOT INTENDED TO ACCEPT STORM WATER AND DIRECT FLOWS TEMPORARILY TO FUNCTIONAL SEDIMENTATION BASIN INLETS. -TYP

REGISTERED PROFESSIONAL ENGINEER
PETER CARLINO
No. C79555
CIVIL
STATE OF CALIFORNIA
ORIGINAL SIGNATURES IN BLUE INK

LEA & BRAZE ENGINEERING, INC.
CIVIL ENGINEERS • LAND SURVEYORS
MAIN OFFICE:
2495 INDUSTRIAL PKWY WEST
HAYWARD, CALIFORNIA 94545
(510) 887-4086
REGIONAL OFFICES:
ROSEVILLE
DUBLIN
SAN JOSE
WWW.LEABRAZE.COM

BADHWAR RESIDENCE
12830 DEER CREEK LANE
LOS ALTOS HILLS,
CALIFORNIA
SANTA CLARA COUNTY
APN: 175-43-050

EROSION CONTROL PLAN

REVISIONS	BY
–	–
–	–
–	–
–	–
–	–

JOB NO: 2200166
DATE: 06-25-20
SCALE: 1" = 20'
DESIGN BY: MR
CHECKED BY: KC
SHEET NO:
ER-1
07 OF 08 SHEETS

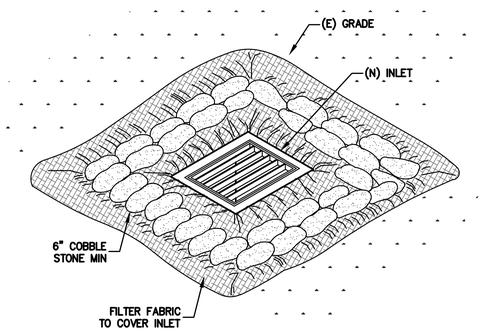

1 ER-2 **INLET PROTECTION**
NTS

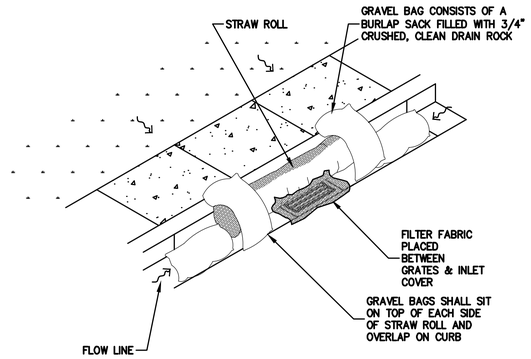

2 ER-2 **STREET INLET PROTECTION**
NTS

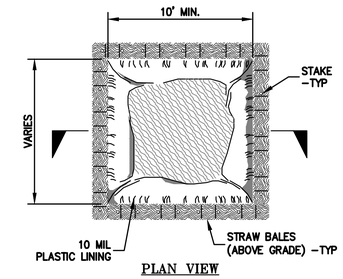

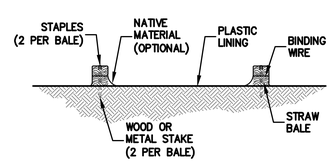

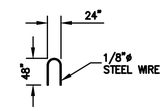

STAPLE DETAIL

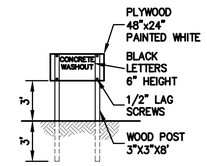

CONCRETE WASHOUT SIGN DETAIL

NOTES:
ACTUAL LAYOUT DETERMINED IN FIELD.

THE CONCRETE WASHOUT SIGN SHALL BE INSTALLED WITHIN 10' OF THE TEMPORARY CONCRETE WASHOUT FACILITY.

3 ER-2 **CONCRETE WASHOUT**
NTS

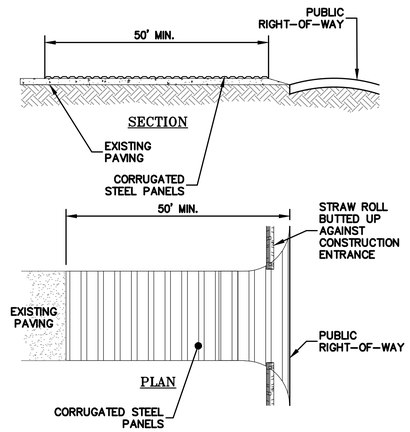

NOTES:

CORRUGATED STEEL PANELS SHALL BE A MINIMUM OF 50'.

WIDTH SHALL BE A MIN. OF 15' OR GREATER IF NECESSARY TO COVER ALL VEHICULAR INGRESS AND EGRESS. PROVIDE AMPLE TURNING RADII.

ACCESSES SHALL BE INSPECTED WEEKLY DURING PERIODS OF HEAVY USAGE, MONTHLY DURING NORMAL USAGE, AND AFTER EACH RAINFALL, WITH MAINTENANCE PROVIDED AS NECESSARY.

4 ER-2 **STEEL PLATED CONSTRUCTION ENTRANCE**
NTS

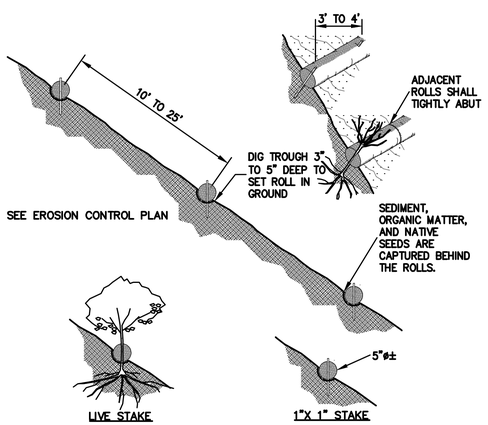

NOTE:
1. STRAW ROLL INSTALLATION REQUIRES THE PLACEMENT AND SECURE STAKING OF THE ROLL IN A TRENCH, 3" TO 5" DEEP, DUG ON CONTOUR. RUNOFF MUST NOT BE ALLOWED TO RUN UNDER OR AROUND ROLL.
2. CONTRACTOR IS RESPONSIBLE FOR REGULAR MAINTENANCE AND INSPECTION. THE SILT SHALL BE CLEANED OUT WHEN IT REACHES HALF THE HEIGHT OF THE ROLL.

5 ER-2 **STRAW ROLLS**
NTS

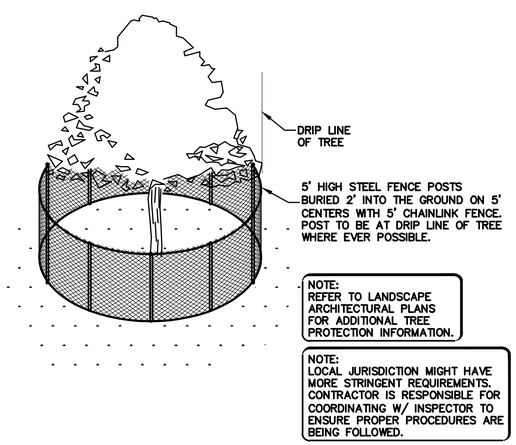

NOTE:
REFER TO LANDSCAPE ARCHITECTURAL PLANS FOR ADDITIONAL TREE PROTECTION INFORMATION.

NOTE:
LOCAL JURISDICTION MIGHT HAVE MORE STRINGENT REQUIREMENTS. CONTRACTOR IS RESPONSIBLE FOR COORDINATING W/ INSPECTOR TO ENSURE PROPER PROCEDURES ARE BEING FOLLOWED.

6 ER-2 **EXISTING TREE PROTECTION DETAIL**
NTS

1. SET POSTS AND EXCAVATE A 4"X4" TRENCH UP SLOPE ALONG THE LINE OF POSTS.

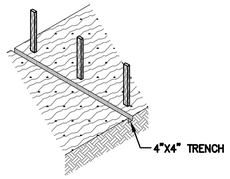

2. STAPLE WIRE FENCE TO THE POSTS.

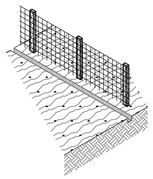

3. ATTACH THE FILTER FABRIC TO THE WIRE FENCE AND EXTEND IT INTO THE TRENCH.

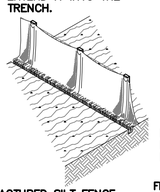

4. BACKFILL AND COMPACT THE EXCAVATED SOIL.

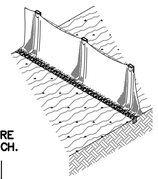

EXTENSION OF FABRIC AND WIRE INTO THE TRENCH.

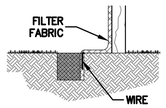

NOTE:
PREMANUFACTURED SILT FENCE PRODUCTS MAY BE USED IN LIEU OF WIRE FENCE. INSTALL PER MANUFACTURER'S RECOMMENDATIONS AND MAINTAIN KEYING OF FABRIC PER THIS DETAIL.

NOTE:
IT IS ESSENTIAL THAT THE WIRE/FABRIC BE FULLY EMBEDDED INTO THE GROUND SO RUN-OFF CANNOT FLOW FREELY UNDER FENCE.

7 ER-2 **SILT FENCE**
NTS

REGISTERED PROFESSIONAL ENGINEER
PETER CARLINO
No. C79555
CIVIL
STATE OF CALIFORNIA
ORIGINAL SIGNATURES IN BLUE INK

LEA & BRAZE ENGINEERING, INC.
CIVIL ENGINEERS • LAND SURVEYORS
MAIN OFFICE:
2495 INDUSTRIAL PKWY WEST
HAYWARD, CALIFORNIA 94545
(510) 887-4086
REGIONAL OFFICES:
ROSEVILLE
DUBLIN
SAN JOSE
WWW.LEABRAZE.COM

BADHWAR RESIDENCE
12830 DEER CREEK LANE
LOS ALTOS HILLS,
CALIFORNIA
SANTA CLARA COUNTY
APN: 175-43-050

EROSION CONTROL DETAILS

REVISIONS	BY
–	–
–	–
–	–
–	–
–	–

JOB NO:	2200166
DATE:	06-25-20
SCALE:	AS NOTED
DESIGN BY:	MR
CHECKED BY:	KC
SHEET NO:	ER-2

08 OF 08 SHEETS