SITE ID: CRAN_RSFR_LOSAO_013

SITE ADDRESS: ROW ADJCT TO 499 W EDITH AVE
LOS ALTOS HILLS, CA 94022

SITE TYPE: PG&E POLE
POLE OWNER: PG&E
FA LOCATION: 14816601
USID: 198297

SITE INFORMATION

APPLICANT:	AT&T MOBILITY 5001 EXECUTIVE PARKWAY SAN RAMON, CA 94583
AGENT:	SURESITE 36 EXECUTIVE PARK, SUITE 210 IRVINE, CA 92614
APN:	ADJCT TO 175-25-068
SITE ADDRESS:	ROW ADJCT TO 499 W EDITH AVE LOS ALTOS HILLS, CA 94022
COUNTY:	SANTA CLARA
LATITUDE:	37° 22' 51.64" N (37.3810) NAD 83
LONGITUDE:	122° 07' 25.32" W (-122.1237) NAD 83
GROUND ELEVATION:	± 175.9' AMSL
ZONING:	PUBLIC ROW
ZONING JURISDICTION:	TOWN OF LOS ALTOS HIILLS

VICINITY MAP

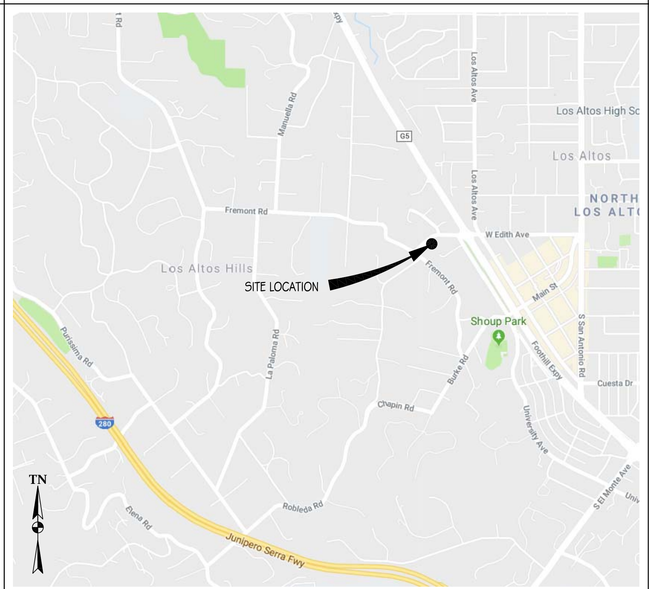

PROJECT TEAM

AGENT:
SURESITE
36 EXECUTIVE PARK, #210
IRVINE, CA 92614
(949) 278-2962
L.MEINERS@SURE-SITE.COM

PROJECT MANAGERS:
CHRIS JOHNSON
ERICSSON
6140 STONERIDGE MALL RD, SUITE 350
PLEASANTON, CA 94588
(408) 796-8443
CHRISTOPHER.JOHNSON@ERICSSON.COM

CONSTRUCTION MANAGER:
TBD

ARCHITECT/ENGINEER OF RECORD:
BRET McCOMB
PRECISION DESIGN & DRAFTING, INC
11768 ATWOOD ROAD, SUITE #20
AUBURN, CA 95603
(530) 823-6546
BRET@PDND.COM

RF MANAGER:
TBD

PROJECT DESCRIPTION

THIS IS AN UNMANNED TELECOMMUNICATIONS FACILITY FOR AT&T WIRELESS CONSISTING OF THE INSTALLATION & OPERATION OF ANTENNAS & ASSOCIATED EQUIPMENT ON AN (E) PG&E UTILITY POLE IN THE PUBLIC RIGHT OF WAY.

SCOPE OF WORK:

1. INSTALL (N) TELECOMMUNICATIONS EQUIPMENT BOXES ON AN (E) PG&E UTILITY POLE. EQUIPMENT IS TO BE INSTALLED ON GO95 COMPLIANT STANDOFF BRACKET & CONSISTS OF (1) ELECTRICAL METER, (1) LOAD CENTER/AC DISCONNECT, (1) CONCEALMENT BOX CONTAINING (1) RRU11 & (1) 4415 W/ PSU UNITS, & (1) KMW FX-OM2L10H2 CYLINDRICAL ANTENNA.
2. ALL EQUIPMENT TO BE PAINTED TO MEET JURISDICTION APPROVAL.
3. UTILITY LINES BETWEEN (E) POINT OF CONNECTION & POLE TO BE UNDERGROUND AND/OR OVERHEAD.

DRAWING INDEX

SHEET NO:	SHEET TITLE
T-1	TITLE SHEET
T-2	GENERAL NOTES, LEGEND, & ABBREVIATIONS
A-1	SITE PLAN
A-2	EQUIPMENT PLAN & ANTENNA PLANS
A-3	ELEVATIONS
A-4	ELEVATIONS
A-5	DETAILS
A-6	DETAILS
E-1	SINGLE-LINE DIAGRAM & DETAILS
E-2	GROUNDING DIAGRAMS

CODE COMPLIANCE

CONSTRUCTION WORKS & MATERIALS MUST COMPLY WITH ALL APPLICABLE NATIONAL, STATE & LOCAL CODES AS ADOPTED BY LOCAL JURISDICTION, INCLUDING BUT NOT LIMITED TO:

1. 2016 CALIFORNIA ADMINISTRATIVE CODE (INCL. TITLES 24 & 25)
2. 2016 CALIFORNIA BUILDING CODE
3. 2016 CALIFORNIA ELECTRICAL CODE
4. 2016 CALIFORNIA MECHANICAL CODE
5. 2016 CALIFORNIA PLUMBING CODE
6. 2016 CALIFORNIA FIRE CODE
7. LOCAL BUILDING CODES
8. CITY/COUNTY ORDINANCES
9. ANSI/EIA-TIA-222-G

HANDICAP REQUIREMENTS

THIS FACILITY IS UNMANNED & NOT FOR HUMAN HABITATION. HANDICAPPED ACCESS & REQUIREMENTS ARE NOT REQUIRED IN ACCORDANCE WITH CALIFORNIA STATE ADMINISTRATIVE CODE, TITLE 24 PART 2, SECTION 1105B.3.4.2, EXCEPTION 1

DRIVING DIRECTIONS

DIRECTIONS FROM AT&T WIRELESS WALNUT CREEK OFFICE

FROM: 5001 EXECUTIVE PARKWAY, SAN RAMON, CA 94583
TO: 499 W EDITH AVE, LOS ALTOS HILLS, CA 94022

1.	HEAD NORTHEAST ON BISHOP DR TOWARD SUNSET DR	256	FT
2.	TURN RIGHT ONTO SUNSET DR	0.1	MI
3.	TURN RIGHT ONTO BOLLINGER CANYON RD	0.3	MI
4.	MERGE ONTO I-680 S VIA THE RAMP TO SAN JOSE	0.3	MI
5.	MERGE ONTO I-680	3.9	MI
6.	CONTINUE STRAIGHT ON I-680	17.5	MI
7.	TAKE EXIT 12 FOR MISSION BLVD, TOWARD I-880	0.2	MI
8.	KEEP RIGHT AT THE FORK, FOLLOW SIGNS FOR MISSION BLVD	0.3	MI
9.	MERGE ONTO CA-262 S /MISSION BLVD	0.6	MI
10.	TAKE EXIT ON LEFT TOWARD I-880 /SAN JOSE	0.9	MI
11.	MERGE ONTO I-880	3.1	MI
12.	TAKE THE CA-237 W EXIT TOWARD MTN VEIW	0.9	MI
13.	CONTINUE ON CA-237 W	8.4	MI
14.	KEEP LEFT TO CONTINUE ON CA-237 W/ SOUTHBAY FWY	0.5	MI
15.	CONTINUE STRAIGHT ONTO GRANT RD	0.6	MI
16.	TURN RIGHT ONTO CUESTA DR	1.0	MI
17.	TURN LEFT TO STAY ON CUESTA DR	0.6	MI
18.	TURN LEFT ONTO S EL MONTE AVE	0.3	MI
19.	TURN RIGHT ONTO FOOTHILL EXPY	1.0	MI
20.	TURN LEFT ONTO W EDITH AVE	0.2	MI

END AT: 499 W EDITH AVE, LOS ALTOS HILLS, CA 94022
ESTIMATED TIME: 50 MINS ESTIMATED DISTANCE: 40.8 MI

At all services & grounding trenches, provide " WARNING" tape at 12" below grade.

CALL
"CALL BEFORE YOU DIG"
811/800-227-2600
NATIONWIDE UNDERGROUND SERVICE ALERT

ADMINISTRATIVE REQUIREMENTS

CONTRACTOR SHALL VERIFY ALL PLANS & (E) DIMENSIONS & CONDITIONS ON THE JOB SITE & SHALL IMMEDIATELY NOTIFY THE ENGINEER IN WRITING OF ANY DISCREPANCIES BEFORE PROCEEDING WITH THE WORK OR BE RESPONSIBLE FOR SAME IF USING 11" X 17" PLOT, DRAWINGS WILL BE HALF SCALE.

AT&T MOBILITY
5001 EXECUTIVE PARKWAY
SAN RAMON, CA 94583

SURESITE
Infrastructure experts. Small cell leaders.
36 EXECUTIVE PARK, SUITE 210
IRVINE, CA 92614

PRECISION DESIGN & Drafting, INC.
Phone: (530) 823-6546 www.pdnd.com
11768 Atwood Rd, Suite 20 Auburn, CA 95603

THESE PLANS AND SPECIFICATIONS, AS INSTRUMENTS OF SERVICE, ARE AND SHALL REMAIN THE PROPERTY OF PRECISION DESIGN & DRAFTING INC. WHETHER THE PROJECT FOR WHICH THEY ARE MADE ARE EXECUTED OR NOT. THE REPRODUCTION, PUBLICATION OR USE OF THESE PLANS AND SPECIFICATIONS BY OTHERS ON OTHER PROJECTS WITHOUT PRIOR WRITTEN CONSENT OF THE ENGINEER. Copyright2013, PRECISION DESIGN & DRAFTING INC. - ALL RIGHTS RESERVED.

REGISTERED PROFESSIONAL ENGINEER
BRET A. McCOMB
C 69891
EXP 09-30-18
CIVIL
STATE OF CALIFORNIA

CRAN_RSFR_LOSAO_013

ROW ADJCT TO 499 W EDITH AVE
LOS ALTOS HILLS, CA 94022

ISSUE STATUS

△	DATE	DESCRIPTION
	06/14/18	CD 90%
	03/13/19	CD 100%

DRAWN BY: I. BAKER
CHECKED BY: T. DiCARLO
APPROVED BY: B. McCOMB
DATE: 03/13/19

SHEET TITLE:
TITLE SHEET

SHEET NUMBER
T-1

GENERAL CONSTRUCTION NOTES

1. PLANS ARE INTENDED TO BE DIAGRAMMATIC OUTLINE ONLY, UNLESS NOTED OTHERWISE. THE WORK SHALL INCLUDE FURNISHING MATERIALS, EQUIPMENT, APPURTENANCES AND LABOR NECESSARY TO COMPLETE ALL INSTALLATIONS AS INDICATED ON THE DRAWINGS.

2. THE CONTRACTOR SHALL OBTAIN, IN WRITING, AUTHORIZATION TO PROCEED BEFORE STARTING WORK ON ANY ITEM NOT CLEARLY DEFINED OR IDENTIFIED BY THE CONTRACT DOCUMENTS.

3. CONTRACTOR SHALL CONTACT USA (UNDERGROUND SERVICE ALERT) AT (800) 227-2600, FOR UTILITY LOCATIONS, 48 HOURS BEFORE PROCEEDING WITH ANY EXCAVATION, SITE WORK OR CONSTRUCTION.

4. THE CONTRACTOR SHALL INSTALL ALL EQUIPMENT AND MATERIALS IN ACCORDANCE WITH MANUFACTURES RECOMMENDATIONS UNLESS SPECIFICALLY INDICATED OTHERWISE, OR WHERE LOCAL CODES OR REGULATIONS TAKE PRECEDENCE.

5. ALL CONSTRUCTION SHALL BE IN ACCORDANCE WITH THE CBC/UBC'S REQUIREMENTS REGARDING EARTHQUAKE RESISTANCE, FOR, BUT NOT LIMITED TO, PIPING, FIXTURES, CEILING GRID, INTERIOR PARTITIONS, AND MECHANICAL EQUIPMENT. ALL WORK MUST COMPLY WITH LOCAL EARTHQUAKE CODES AND REGULATIONS.

6. REPRESENTATIONS OF TRUE NORTH, OTHER THAN THOSE FOUND ON THE PLOT OF SURVEY DRAWINGS, SHALL NOT BE USED TO IDENTIFY OR ESTABLISH BEARING OF TRUE NORTH AT THE SITE. THE CONTRACTOR SHALL RELY SOLELY ON THE PLOT OF SURVEY DRAWING AND ANY SURVEYOR'S MARKINGS AT THE SITE FOR THE ESTABLISHMENT OF TRUE NORTH, AND SHALL NOTIFY THE ARCHITECT/ENGINEER PRIOR TO PROCEEDING WITH THE WORK IS ANY DISCREPANCY IS FOUND BETWEEN THE CARIOUS ELEMENTS OF THE WORKING DRAWINGS AND THE TRUE NORTH ORIENTATION AS DEPICTED ON THE CIVIL SURVEY. THE CONTRACTOR SHALL ASSUME SOLE LIABILITY FOR ANY FAILURE TO NOTIFY THE ARCHITECT/ ENGINEER.

7. THE BUILDING DEPARTMENT ISSUING THE PERMITS SHALL BE NOTIFIED AT LEAST TWO WORKING DAYS PRIOR TO THE COMMENCEMENT OF WORK, OR AS OTHERWISE STIPULATED BY THE CODE ENFORCEMENT OFFICIAL HAVING JURISDICTION.

8. DO NOT EXCAVATE OR DISTURB BEYOND THE PROPERTY LINES OR LEASE LINES, UNLESS OTHERWISE NOTED.

9. ALL EXISTING UTILITIES, FACILITIES, CONDITIONS, AND THEIR DIMENSIONS SHOWN ON THE PLAN HAVE BEEN PLOTTED FROM AVAILABLE RECORDS. THE ARCHITECT/ENGINEER AND THE OWNER ASSUME NO RESPONSIBILITY WHATSOEVER AS TO THE SUFFICIENCY OR THE ACCURACY OF THE INFORMATION SHOWN ON THE PLANS, OR THE MANNER OF THEIR REMOVAL OR ADJUSTMENT. CONTRACTORS SHALL BE RESPONSIBLE FOR DETERMINING EXACT LOCATION OF ALL EXISTING UTILITIES AND FACILITIES PRIOR TO START OF CONSTRUCTION. CONTRACTORS SHALL ALSO OBTAIN FROM EACH UTILITY COMPANY DETAILED INFORMATION RELATIVE TO WORKING SCHEDULES AND METHODS OF REMOVING OR ADJUSTING EXISTING UTILITIES.

10. CONTRACTOR SHALL VERIFY ALL EXISTING UTILITIES, BOTH HORIZONTAL AND VERTICALLY, PRIOR TO THE START OF CONSTRUCTION. ANY DISCREPANCIES OR DOUBTS AS TO THE INTERPRETATION OF PLANS SHOULD BE IMMEDIATELY REPORTED TO THE ARCHITECT.ENGINEER FOR RESOLUTION AND INSTRUCTION, AND NO FURTHER WORK SHALL BE PREFORMED UNTIL THE DISCREPANCY IS CHECKED AND CORRECTED BY THE ARCHITECT/ ENGINEER. FAILURE TO SECURE SUCH INSTRUCTION MEANS CONTRACTOR WILL HAVE WORKED AT HIS/HER OWN RISK AND EXPENSE.

11. ALL NEW AND EXISTING UTILITY STRUCTURES ON SITE AND IN AREAS TO BE DISTURBED BY CONSTRUCTION SHALL BE ADJUSTED TO FINISH ELEVATIONS PRIOR TO FINAL INSPECTION OF WORK.

12. ANY DRAIN AND/OR FIELD TILE ENCOUNTERED/ DISRUPTED DURING CONSTRUCTION SHALL BE RETURNED TO ITS ORIGINAL CONDITION PRIOR TO COMPLETION OF WORK. SIZE, LOCATION AND TYPE OF ANY UNDERGROUND UTILITIES OR IMPROVEMENTS SHALL BE ACCURATELY NOTED AND PLACED ON "AS-BUILT" DRAWINGS BY GENERAL CONTRACTOR, AND ISSUED TO THE ARCHITECT/ ENGINEER AT COMPLETION OF PROJECT.

13. ALL TEMPORARY EXCAVATIONS FOR THE INSTALLATION OF FOUNDATIONS, UTILITIES, ETC, SHALL BE PROPERLY LAID BACK OR BRACED IN ACCORDANCE WITH CORRECT OCCUPATIONAL SAFETY AND HEALTH ADMINISTRATION (OSHA) REQUIREMENTS.

14. INCLUDE MISC ITEMS PER AT&T WIRELESS SPECIFICATIONS.

15. ALL EQUIPMENT LOGOS, OTHER THAN THOSE REQUIRED BY REGULATION (E.G. NODE IDENTIFICATION OR SHTUDOWN SIGNAGE) OR PG&E REGULATIONS SHALL BE PAINTED OVER OR REMOVED. RAISED/DEPRESSED LOGOS OR TEXT ON EQUIPMENT (E.G. RRUS), IF PRESENT, TO BE SANDED OFF OR COVERED WITH STICKER, & THEN PAINTED OVER.

16. FONDATED RF WAC WARNING SIGNAGE SHALL FACE OUT TO STREET WHEN PLACED IN FRONT OF OR NEAR A WINDOW. SIGNAGE SHALL FACE TOWARD THE BUILDING IF THERE IS NO WINDOW.

17. ALL EQUIPMENT, INCLUDING ANTENNAS, MOUNTING/STANDOFF BRACKETS, POLE EXTENSIONS, CONDUIT, METER, AND RADIOS SHALL BE PAINTED 'MESA BROWN' USING A DURABLE OUTDOOR PAINT.

18. CABLING SHALL BE MESA BROWN IN COLOR AND SHALL BE INSTALLED IN A TIDY MANNER WITHOUT EXCESS CABLE LOOPS, & SHALL BE HIDDEN FROM VIEW TO THE MAXIMUM EXTENT POSSIBLE.

19. SUPPORT EQUIPMENT (E.G. METERS, DISCONNECT SWITCH, ETC) TO BE CLUSTERED VERTICALLY AS CLOSE AS TECHNICALLY FEASIBLE ON POLE.

GENERAL NOTES FOR EXISTING CELL SITES

1. PRIOR TO THE SUBMISSION OF BIDS, THE BIDDING CONTRACTOR SHALL VISIT THE CELL SITE TO FAMILIARIZE WITH THE EXISTING CONDITIONS AND TO CONFIRM THAT THE WORK CAN BE ACCOMPLISHED AS SHOWN ON THE CONSTRUCTION DRAWINGS. ANY DISCREPANCY FOUND SHALL BE BROUGHT TO THE ATTENTION OF CONTRACTOR.

2. CONTRACTOR SHALL VERIFY ALL EXISTING DIMENSIONS AND CONDITIONS PRIOR TO COMMENCING ANY WORK. ALL DIMENSIONS OF EXISTING CONSTRUCTION SHOWN ON THE DRAWINGS MUST BE VERIFIED. CONTRACTOR SHALL NOTIFY THE CONTRACTOR OF ANY DISCREPANCIES PRIOR TO ORDERING MATERIAL OR PROCEEDING WITH CONSTRUCTION.

3. THE EXISTING CELL SITE IS IN FULL COMMERCIAL OPERATION. ANY CONSTRUCTION WORK BY CONTRACTOR SHALL NOT DISRUPT THE EXISTING NORMAL OPERATION. ANY WORK ON EXISTING EQUIPMENT MUST BE COORDINATED WITH CONTRACTOR. ALSO, WORK SHOULD BE SCHEDULED FOR AN APPROPRIATE MAINTENANCE WINDOW USUALLY IN LOW TRAFFIC PERIODS AFTER MIDNIGHT.

4. SINCE THE CELL SITE IS ACTIVE, ALL SAFETY PRECAUTIONS MUST BE TAKEN WHEN WORKING AROUND HIGH LEVELS OF ELECTROMAGNETIC RADIATION. EQUIPMENT SHOULD BE SHUTDOWN PRIOR TO PERFORMING ANY WORK THAT COULD EXPOSE THE WORKERS TO DANGER. PERSONAL RF EXPOSURE MONITORS ARE ADVISED TO BE WORN TO ALERT OF ANY DANGEROUS EXPOSURE LEVELS.

5. CONTRACTOR SHALL DETERMINE ACTUAL ROUTING OF CONDUIT, POWER AND T1 CABLES, GROUNDING CABLES AS SHOWN ON THE POWER, GROUNDING AND TELCO PLAN DRAWING. CONTRACTOR SHALL UTILIZE EXISTING TRAYS AND/OR SHALL ADD NEW TRAYS AS NECESSARY. CONTRACTOR SHALL CONFIRM THE ACTUAL ROUTING WITH THE CONTRACTOR.

6. CONTRACTOR SHALL LEGALLY AND PROPERLY DISPOSE OF ALL SCRAP MATERIALS SUCH AS COAXIAL CABLES AND OTHER ITEMS REMOVED FROM THE EXISTING FACILITY. ANTENNAS REMOVED SHALL BE RETURNED TO THE OWNER'S DESIGNATED LOCATION.

APPLICABLE CODES, REGULATIONS, AND STANDARDS

1. CONTRACTOR'S WORK SHALL COMPLY WITH ALL APPLICABLE NATIONAL, STATE, AND LOCAL CODES AS ADOPTED BY THE LOCAL AUTHORITY HAVING JURISDICTION (AHJ) FOR THE LOCATION.

2. THE EDITION OF THE AHJ ADOPTED CODES AND STANDARDS IN EFFECT ON THE DATE OF CONTRACT AWARD SHALL GOVERN THE DESIGN.

3. CONTRACTOR'S WORK SHALL COMPLY WITH THE LATEST EDITION OF THE FOLLOWING STANDARDS:

   -AMERICAN CONCRETE INSTITUTE (ACI) 318, BUILDING CODE REQUIREMENTS FOR STRUCTURAL CONCRETE
   -AMERICAN INSTITUTE OF STEEL CONSTRUCTION (AISC), MANUAL OF STEEL CONSTRUCTION, ASD, NINTH EDITION
   -TELECOMMUNICATIONS INDUSTRY ASSOCIATION (TIA) 222-F, STRUCTURAL STANDARD FOR STRUCTURAL ANTENNA TOWER AND ANTENNA SUPPORTING STRUCTURES
   -INSTITUTION FOR ELECTRICAL AND ELECTRONICS ENGINEERS (IEEE) 81, GUIDE FOR MEASURING EARTH RESISTIVITY, GROUND IMPEDANCE, AND EARTH SURFACE POTENTIALS OF A GROUND SYSTEM IEEE (1999) RECOMMENDED PRACTICE FOR POWERING AND GROUNDING OF ELECTRICAL EQUIPMENT
   -IEEE C62.41, RECOMMENDED PRACTICES ON SURGE VOLTAGES IN LOW VOLTAGE AC POWER CIRCUITS (FOR LOCATION CATEGORY "C3" AND "HIGH SYSTEM EXPOSURE")

4. TIA 607 COMMERCIAL BUILDING GROUNDING AND BONDING REQUIREMENTS FOR TELECOMMUNICATIONS AND TELCORDIA GR-63 NETWORK EQUIPMENT-BUILDING SYSTEM (NEBS): PHYSICAL PROTECTION
   TELCORDIA GR-347 CENTRAL OFFICE POWER WIRING
   TELCORDIA GR-1275 GENERAL INSTALLATION REQUIREMENTS
   TELCORDIA GR-1503 COAXIAL CABLE CONNECTIONS

5. ANY AND ALL OTHER LOCAL & STATE LAWS AND REGULATIONS

6. FOR ANY CONFLICTS BETWEEN SECTIONS OF LISTED CODES AND STANDARDS REGARDING MATERIAL, METHODS OF CONSTRUCTION, OR OTHER REQUIREMENTS, THE MOST RESTRICTIVE SHALL GOVERN. WHERE THERE IS CONFLICT BETWEEN A GENERAL REQUIREMENT AND SPECIFIC REQUIREMENT, THE SPECIFIC REQUIREMENT SHALL GOVERN.

GENERAL TRENCHING NOTES

1. MAINTAIN 40" MINIMUM COVER FOR ALL ELECTRICAL CONDUITS.
2. MAINTAIN 30" MINIMUM COVER FOR ALL TELECOMMUNICATIONS CONDUITS.
3. MINIMUM 1" SAND SHADING BELOW CONDUITS, AND 6" COVERING ON TOP OF CONDUITS REQUIRED.
4. ALL ELECTRICAL CONDUITS FROM POWER COMPANY FROM ANY POLE, TRANSFORMER OR OTHER LOCATIONS WILL BE SLURRY BACKFILLED.
5. IN STREET SLURRY TO GRADE AND MILL DOWN 1-1/2" FOR AC CAP.
6. IN DIRT SLURRY 18" FROM GRADE AND FILL 95% COMPACTION NATIVE SOIL FOR BALANCE
7. WARNING TAPE TO BE PLACED IN TRENCH 12" ABOVE ALL CONDUITS AND #18 WARNING TAPE ABOVE RING.

GENERAL GROUNDING NOTES

1. 5/8" x 10' ROD, CAD WELD BELOW GRADE
2. GROUND TESTED AT 5 OHMS OR LESS.
3. #5 GROUND AND BOND WIRE.
4. GROUNDS 3' FROM POLE.
5. PLACE 3 #10 GA WIRES FROM TESCO BREAKER TO PBMD OR STRONG BOX.
6. WOOD MOULDING, STAPLED EVERY 3' AND AT EACH END.

GENERAL CONDUIT NOTES

1. ALL CONDUITS WILL BE MANDRELED AND EQUIPPED WITH 3/8" PULL ROPE.
2. SCHEDULE 40 CONDUIT FOR UNDERGROUND USE.
3. SCHEDULE 80 CONDUIT FOR RISER USE.
4. 2" GALVANIZED STEEL CONDUIT FOR ANY CONDUIT UNDER 3', STUB UP 10" THEN CONVERT TO SCHEDULE 80.
5. CONVERT 4" CONDUIT TO 3" AT BASE OF POLE.
6. CONTRACTOR TO STUB UP POLE 10" w/ 3" POWER CONDUIT. POWER COMPANY TO CONVERT FROM 3" STUB SCHEDULE 80 TO 2" SCHEDULE 80 FROM TOP OF STUB UP.

TYPICAL R.O.W. POLE CONSTRUCTION NOTES

1. CABLE NOT TO IMPEDE 15" CLEAR SPACE OFF POLE FACE.
2. ALL CLIMB STEPS NEXT TO CONDUIT SHALL HAVE EXTENDED STEPS.
3. NO BOLT THREADS TO PROTRUDE MORE THAN 1-1/2"
4. ALL HOLES IN POLE LEFT FROM REARRANGEMENT OF CLIMBERS TO BE FILLED.
5. 90° SHORT SWEEPS UNDER ANTENNA ARM, ALL CABLES MUST TRANSITION ON THE INSIDE OR BOTTOM OF THE ARM (NO CABLE ON TOP OF ARM).
6. USE 90° CONNECTOR AT CABLE CONNECTION FOR OMNI DOWN ANTENNAS.
7. USE CABLE CLAMPS TO SECURE CABLE TO ARMS, PLACE 2" T-MOBILE CABLE I.D. TAGS ON BOTH SIDES OF ARMS.
8. USE 1/2" DIA. CABLE ON ANTENNAS UNLESS OTHERWISE SPECIFIED.
9. PLACE GPS ON ARM OF SOUTHERN SKY EXPOSURE AT MINIMUM 6" FROM TRANSMIT ANTENNA WHICH IS 24" AWAY FROM CENTER OF POLE.
10. FILL VOID AROUND CABLES AT CONDUIT OPENING WITH FOAM SEALANT TO PREVENT WATER INTRUSION.

ABBREVIATIONS

A	AMPERE
AB	ANCHOR BOLT
ABV	ABOVE
ACCA	ANTENNA CABLE COVER ASSEMBLY
ADD'L	ADDITIONAL
AFF	ABOVE FINISHED FLOOR
AFG	ABOVE FINISHED GRADE
AIC	AMPERE INTERRUPTING CAPACITY
ALUM	ALUMINUM
ALT	ALTERNATE
ANT	ANTENNA
APPROX	APPROXIMATE(LY)
ARCH	ARCHITECT(URAL)
AT	AMPERE TRIP
AWG	AMERICAN WIRE GAUGE
BATT	BATTERY
BD	BOARD
BLDG	BUILDING
BLK	BLOCK
BLKG	BLOCKING
BM	BEAM
BN	BOUNDARY NAILING
BR	BRANCH
BRKR	BREAKER
BTCW	BARE TINNED COPPER WIRE
BTS	BASE TRANSMISSION SYSTEM
BOF	BOTTOM OF FOOTING
BU	BACK-UP CABINET
C	CONDUIT
CAB	CABINET
CANT	CANTILEVER(ED)
CB	CIRCUIT BREAKER
CIP	CAST IN PLACE
CKT	CIRCUIT
CLG	CEILING
CLR	CLEAR
COL	COLUMN
CONC	CONCRETE
CONN	CONNECTION(OR)
CONST	CONSTRUCTION
CONT	CONTINUOUS
d	PENNY (NAILS)
DBL	DOUBLE
DEM	DEMAND
DEPT	DEPARTMENT
DF	DOUGLAS FIR
DIA	DIAMETER
DIAG	DIAGONAL
DIM	DIMENSION
DWG	DRAWING(S)
DWL	DOWEL(S)
EA	EACH
EGR	EMERGENCY GENERATOR RECEPTACLE
EL	ELEVATION
ELEC	ELECTRICAL
ELEV	ELEVATOR
EMT	ELECTRICAL METALLIC TUBING
EN	EDGE NAIL
ENCL	ENCLOSURE
ENG	ENGINEER
EQ	EQUAL
EXIST, (E)	EXISTING
EXP	EXPANSION
EXT	EXTERIOR
FAB	FABRICATION(OR)
FAC	FACTOR
F/A	FIRE ALARM
FF	FINISH FLOOR
FG	FINISH GRADE
FIN	FINISH(ED)
FLR	FLOOR
FLUOR	FLUORESCENT
FDN	FOUNDATION
FOC	FACE OF CONCRETE
FOM	FACE OF MASONRY
FOS	FACE OF STUD
FOW	FACE OF WALL
FS	FINISH SURFACE
FT, (')	FOOT (FEET)
FTG	FOOTING
FU	FUSE
G	GROUND
GR	GROWTH (CABINET)
GA	GAUGE
GEN	GENERATOR
GALV	GALVANIZE(D)
GFCI	GROUND FAULT CIRCUIT INTERRUPTER
GLB	GLUE LAMINATED BEAM
GND	GROUND
GPS	GLOBAL POSITIONING SYSTEM
GRND	GROUND
HDBC	HARD DRAWN COPPER WIRE
HDR	HEADER
HGR	HANGER
HPS	HIGH PRESSURE SODIUM

HT	HEIGHT
ICGB	ISOLATED COPPER GROUND BUSS
IN, (")	INCH(ES)
INT	INTERIOR
LB, (#)	POUND(S)
LAG	LAG BOLTS
LF	LINEAR FEET (FOOT)
LTH	LENGTH
L	LONG(ITUDINAL)
LPS	LOW PRESSURE SODIUM
MAS	MASONRY
MAX	MAXIMUM
MB	MACHINE BOLT
MECH	MECHANICAL
MFR	MANUFACTURER
MIN	MINIMUM
MISC	MISCELLANEOUS
MLO	MAIN LUGS ONLY
MTD	MOUNTED
MTG	MOUNTING
MTL	METAL
MTS	MANUAL TRANSFER SWITCH
N	NEUTRAL
(N)	NEW
NEMA	NATIONAL ELECTRICAL MANUFACTURER'S ASSOC.
NO, (#)	NUMBER
NTS	NOT TO SCALE
OH	OVERHEAD
OC	ON CENTER
OPNG	OPENING
P	POLE
P/C	PRECAST CONCRETE
PCS	PERSONAL COMMUNICATION SERVICES
PH	PHASE
PLY	PLYWOOD
PNLBD	PANELBOARD
PPC	POWER PROTECTION CABINET
PRC	PRIMARY RADIO CABINET
PRI	PRIMARY
PSF	POUNDS PER SQUARE FOOT
PSI	POUNDS PER SQUARE INCH
PT	PRESSURE TREATED
PWR	POWER (CABINET)
QTY	QUANTITY
RAD, (R)	RADIUS
RCPT	RECEPTACLE
REF	REFERENCE
REINF	REINFORCEMENT(ING)
REQ'D	REQUIRED
RGS	RIGID GALVANIZED STEEL
SAF	SAFETY
SCH	SCHEDULE
SDBC	SOFT DRAWN BARE COPPER
SEC	SECONDARY
SHT	SHEET
SIM	SIMILAR
SN	SOLID NEUTRAL
SPEC	SPECIFICATION(S)
SQ	SQUARE
SS	STAINLESS STEEL
STD	STANDARD
STL	STEEL
STRUC	STRUCTURAL
SURF	SURFACE
SW	SWITCH
TEL	TELEPHONE
TEMP	TEMPORARY
THK	THICKNESS)
TN	TOE NAIL
TOA	TOP OF ANTENNA
TOC	TOP OF CURB
TOF	TOP OF FOUNDATION
TOP	TOP OF PLATE (PARAPET)
TOS	TOP OF STEEL
TOW	TOP OF WALL
TYP	TYPICAL
UG	UNDER GROUND
UL	UNDERWRITERS LABORATORY INC.
UNO	UNLESS NOTED OTHERWISE
V	VOLT
VAC	VOLT ALTERNATING CURRENT
VIF	VERIFY IN FIELD
W	WATT OR WIRE
WD	WIDE(WIDTH)
W/	WITH
W/O	WITHOUT
WD	WOOD
WP	WEATHERPROOF
WT	WEIGHT
XFER	TRANSFER
XFMR	TRANSFORMER
XLPE	CROSS-LINK POLYETHYLENE
℄	CENTERLINE
℄	PLATE

SYMBOLS LEGEND

NEW ANTENNA
EXISTING ANTENNA
GROUND ROD
GROUND BUSS BAR
MECHANICAL GRND. CONN.
GROUND ACCESS WELL
ELECTRIC BOX
TELEPHONE BOX
LIGHT POLE
FND. MONUMENT
SPOT ELEVATION
SET POINT
REVISION
GRID REFERENCE
DETAIL REFERENCE
ELEVATION REFERENCE
SECTION REFERENCE

GROUT OR PLASTER
(E) BRICK
(E) MASONRY
CONCRETE
EARTH
GRAVEL
PLYWOOD
SAND
WOOD CONT.
WOOD BLOCKING
STEEL
CENTERLINE
PROPERTY/LEASE LINE
MATCH LINE
WORK POINT
GROUND CONDUCTOR
COAXIAL CABLE
OVERHEAD SERVICE CONDUCTORS
CHAIN LINK FENCING
OVERHEAD TELEPHONE/OVERHEAD POWER
OVERHEAD TELEPHONE LINE
OVERHEAD POWER LINE
POWER RUN

TELCO RUN
POWER/TELCO RUN
GROUNDING CONDUCTOR
GROUNDING CONDUCTOR
CONDUIT UNDERGROUND
FUSE, SIZE AND TYPE AS INDICATED.
SAFETY SWITCH, 2P-240V-60A W/60A FUSES, NEMA 3R ENCLOSURE, SQ D CATALOG NO. H222NRB
MANUAL TRANSFER SWITCH, 2P-240V-200A, NO FUSE, NEMA 3R ENCLOSURE
LIGHTING FIXTURE, FLUORESCENT, 10.94" x 4'-0", 2/40W, SURFACE MOUNTING TYPE, HUBBELL LIGHTING CATALOG #WSW232T
LIGHTING FIXTURE, FLUORESCENT, 10.94" x 8'-0", 2/95W, SURFACE MOUNTING TYPE, HUBBELL LIGHTING CATALOG #TWSM232T
LIGHTING FIXTURE, HIGH PRESSURE SODIUM, 1/70W, WALL MOUNTING TYPE, HUBBELL LIGHTING CATALOG #NRG-307 OR 1/50W, HUBBELL LIGHTING CATALOG #NRG-121
EXIT SIGN, THERMOPLASTIC LED, SINGLE FACE, UNIVERSAL MOUNTING, W/BATTERY PACK, HUBBELL LIGHTING CATALOG #PRB
COMBINATION, EXIT SIGN & EMERGENCY LIGHTING, HUBBELL LIGHTING CATALOG #FRC
EMERGENCY LIGHTING, 2/50W, HUBBELL LIGHTING CATALOG #HEG-50-2-R91
LIGHTING FIXTURE, INCANDESCENT, 1/100W, WALL MOUNTING TYPE, HUBBELL LIGHTING CATALOG #BRM-100-06-1
LIGHTING FIXTURE, HALOGEN, QUARTZ, 1/300W, HUBBELL LIGHTING CATALOG #QL-505
LIGHTING FIXTURE, 1/175W. METAL HALIDE, HUBBELL CAT #MIC-0175H-336
5/8" X 10'-0" ,CU. GND ROD 18" MIN. BELOW GRADE.

5/8" X 10'-0" ,CU. GND ROD IN TEST WELL 18" MIN. BELOW GRADE.
CHEMICAL GROUND ROD (XIT GROUND ROD)
CADWELD CONNECTION
MECHANICAL CONNECTION
HALO GROUND CONNECTION
CIRCUIT BREAKER
UTILITY METER BASE
TRANSFORMER
STEP-DOWN TRANSFORMER
RECEPTACLE, 2P-3W-125V-15A, DUPLEX, GROUND TYPE, HUBBELL CATALOG #5362
TOGGLE SWITCH, 1P-1125V-15A, HUBBELL CATALOG #HBL 1201CN
TOGGLE SWITCH, 1P-120V-15A, "WP"
IONIZATION SMOKE DETECTOR W/ALARM HORN & AUXILIARY CONTACT, 120 VAC, GENTEX PART NO. 7100F
POLE
(N) POLE MOUNTED XFMER
(E) POLE MOUNTED XFMR
(N) PAD MOUNTED XFMER
(E) PAD MOUNTED XFMER

at&t
AT&T MOBILITY
5001 EXECUTIVE PARKWAY
SAN RAMON, CA 94583

SURESITE
Infrastructure experts. Small cell leaders.
36 EXECUTIVE PARK, SUITE 210
IRVINE, CA 92614

PRECISION DESIGN & Drafting, INC.
Phone: (530) 823-6546 www.pdnd.com
11768 Atwood Rd, Suite 20 Auburn, CA 95603

THESE PLANS AND SPECIFICATIONS, AS INSTRUMENTS OF SERVICE, ARE AND SHALL REMAIN THE PROPERTY OF PRECISION DESIGN & DRAFTING INC. WHETHER THE PROJECT FOR WHICH THEY ARE MADE ARE EXECUTED OR NOT. THE REPRODUCTION, PUBLICATION OR USE OF THESE PLANS AND SPECIFICATIONS BY ANY PERSONS OR ENTITY ON OTHER PROJECTS WITHOUT PRIOR WRITTEN CONSENT OF THE ENGINEER. Copyright2015, PRECISION DESIGN & DRAFTING INC. ALL RIGHTS RESERVED.

REGISTERED PROFESSIONAL ENGINEER
BRET A. McCOMB
C 69891
EXP 09-30-18
CIVIL
STATE OF CALIFORNIA

CRAN_RSFR_LOSA0_013

ROW ADJCT TO 499 W EDITH AVE
LOS ALTOS HILLS, CA 94022

ISSUE STATUS

△	DATE	DESCRIPTION
	06/14/18	CD 90%
	03/13/19	CD 100%

DRAWN BY:	I. BAKER
CHECKED BY:	T. DiCARLO
APPROVED BY:	B. McCOMB
DATE:	03/13/19

SHEET TITLE:

GENERAL NOTES, LEGEND, & ABBREVIATIONS

SHEET NUMBER

T-2

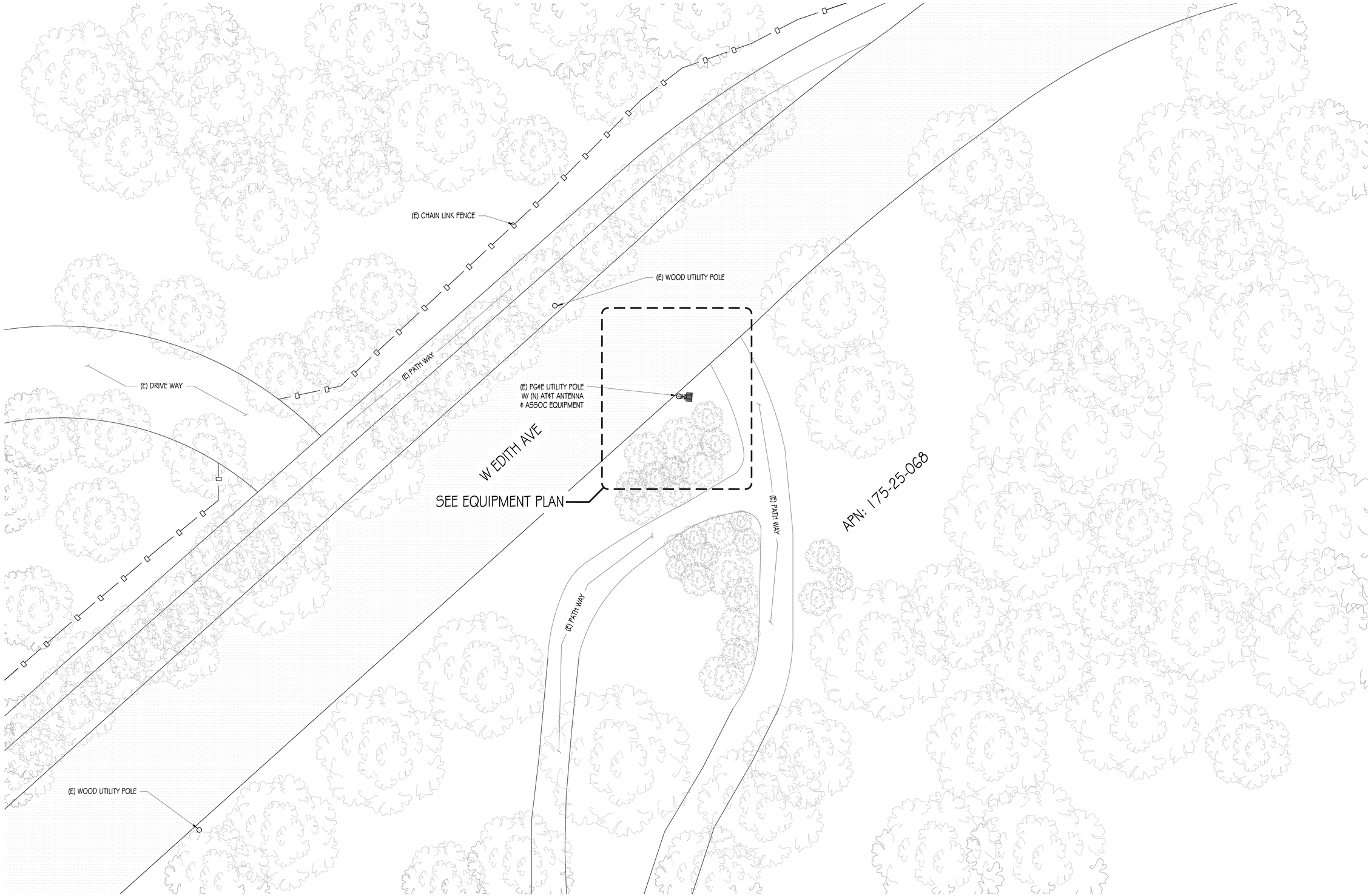

TN

SITE PLAN

1"=10'

0 5' 10' 20' 30' 50'

at&t

AT&T MOBILITY
5001 EXECUTIVE PARKWAY
SAN RAMON, CA 94583

SURESITE
Infrastructure experts. Small cell leaders.

36 EXECUTIVE PARK, SUITE 210
IRVINE, CA 92614

PRECISION DESIGN & Drafting, INC.
Phone: (530) 823-6546 www.pdnd.com
11768 Atwood Rd, Suite 20 Auburn, CA 95603

THESE PLANS AND SPECIFICATIONS, AS INSTRUMENTS OF SERVICE, ARE AND SHALL REMAIN THE PROPERTY OF PRECISION DESIGN & DRAFTING INC. WHETHER THE PROJECT FOR WHICH THEY ARE MADE ARE EXECUTED OR NOT. THE REPRODUCTION, PUBLICATION OR USE OF THESE PLANS AND SPECIFICATIONS BY ANYBODY ON OTHER PROJECTS WITHOUT PRIOR WRITTEN CONSENT OF THE ENGINEER. Copyright2015, PRECISION DESIGN & DRAFTING INC. - ALL RIGHTS RESERVED.

REGISTERED PROFESSIONAL ENGINEER
BRET A. McCOMB
C 69891
EXP 09-30-18
CIVIL
STATE OF CALIFORNIA

CRAN_RSFR_LOSAO_013

ROW ADJCT TO 499 W EDITH AVE
LOS ALTOS HILLS, CA 94022

ISSUE STATUS

△	DATE	DESCRIPTION
	06/14/18	CD 90%
	03/13/19	CD 100%

DRAWN BY:	I. BAKER
CHECKED BY:	T. DiCARLO
APPROVED BY:	B. McCOMB
DATE:	03/13/19

SHEET TITLE:

SITE PLAN

SHEET NUMBER

A-1

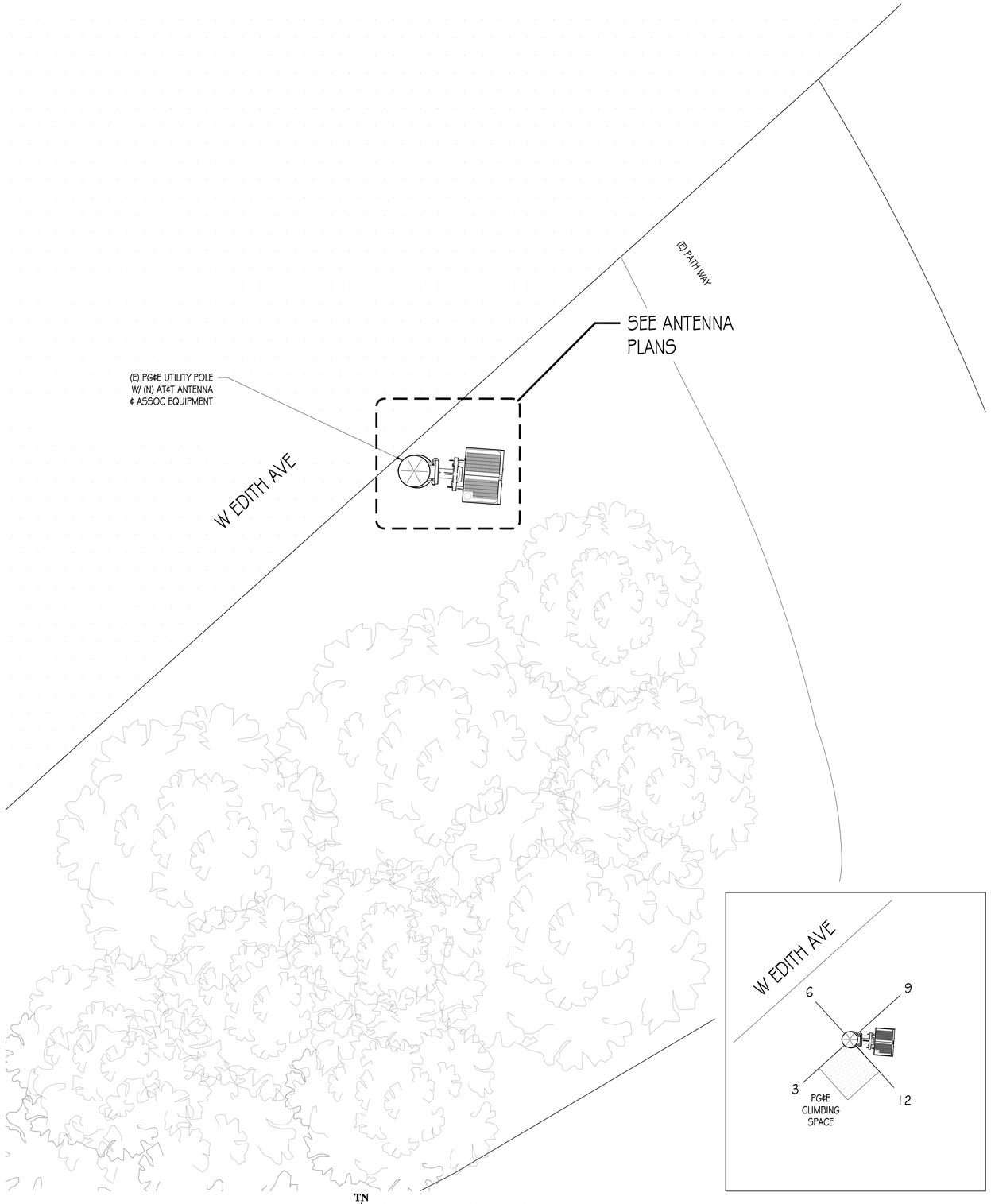

TN

EQUIPMENT PLAN

1/2"=1'

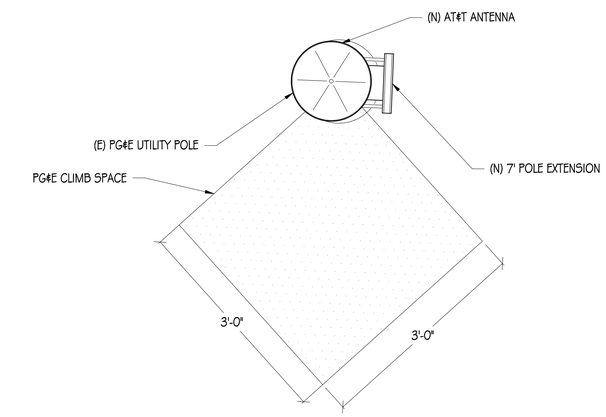

TN

ANTENNA PLAN

1"=1'

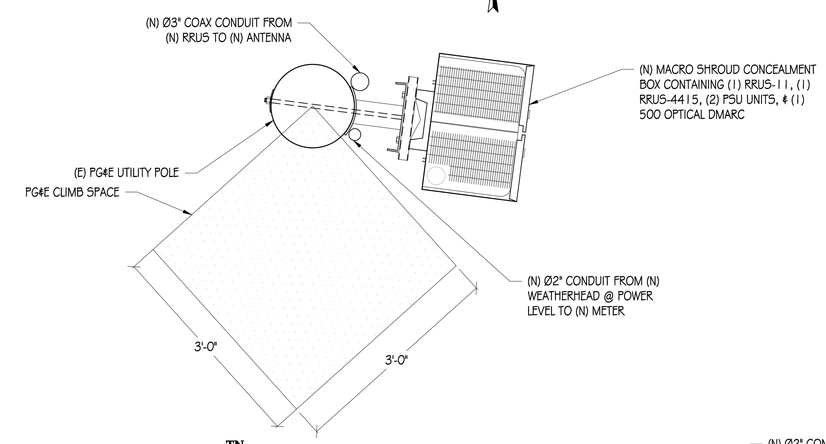

TN

RRH PLAN

1"=1'

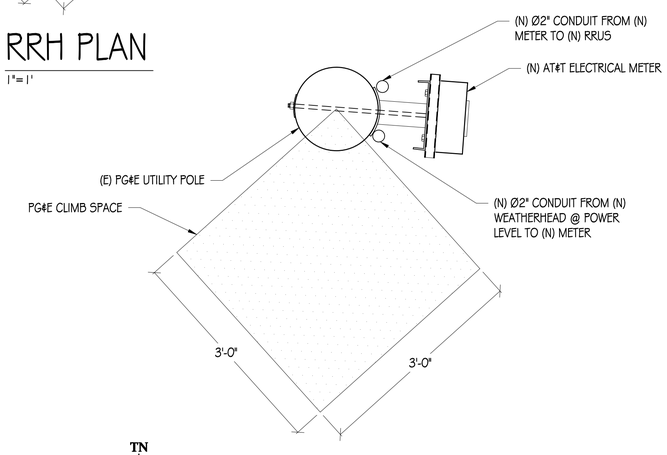

TN

ELECTRICAL METER PLAN

1"=1'

at&t

AT&T MOBILITY
5001 EXECUTIVE PARKWAY
SAN RAMON, CA 94583

SURESITE
Infrastructure experts. Small cell leaders.

36 EXECUTIVE PARK, SUITE 210
IRVINE, CA 92614

PRECISION DESIGN & Drafting, INC.
Phone: (530) 823-6546 www.pdnd.com
11768 Atwood Rd, Suite 20 Auburn, CA 95603

THESE PLANS AND SPECIFICATIONS, AS INSTRUMENTS OF SERVICE, ARE AND SHALL REMAIN THE PROPERTY OF PRECISION DESIGN & DRAFTING INC. WHETHER THE PROJECT FOR WHICH THEY ARE MADE ARE EXECUTED OR NOT. THE REPRODUCTION, ALTERATION OR USE OF THESE DRAWINGS WITHOUT WRITTEN AUTHORITY ON OTHER PROJECTS WITHOUT PRIOR WRITTEN CONSENT OF THE ENGINEER. Copyright2013, PRECISION DESIGN & DRAFTING INC. - ALL RIGHTS RESERVED.

REGISTERED PROFESSIONAL ENGINEER
BRET A. McCOMB
C 69891
EXP 09-30-18
CIVIL
STATE OF CALIFORNIA

CRAN_RSFR_LOSAO_013

ROW ADJCT TO 499 W EDITH AVE
LOS ALTOS HILLS, CA 94022

ISSUE STATUS

△	DATE	DESCRIPTION
	06/14/18	CD 90%
	03/13/19	CD 100%

DRAWN BY:	I. BAKER
CHECKED BY:	T. DiCARLO
APPROVED BY:	B. McCOMB
DATE:	03/13/19

SHEET TITLE:

EQUIPMENT PLAN & ANTENNA PLANS

SHEET NUMBER

A-2

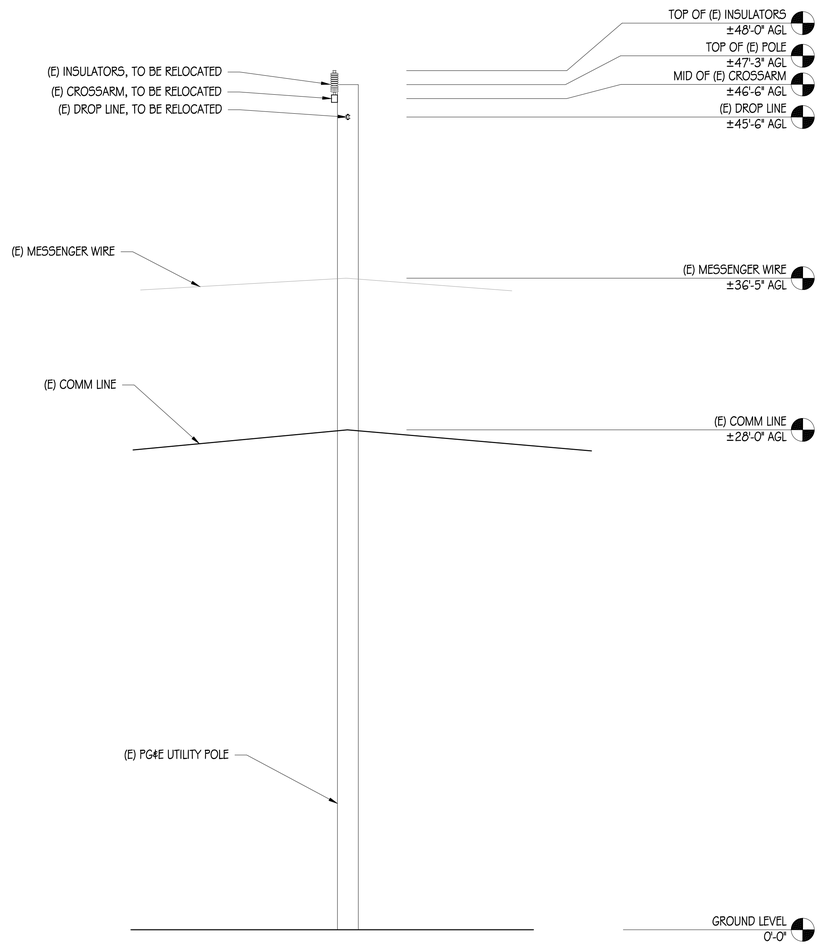

EXISTING NORTHWEST ELEVATION

1/4"=1'-0"

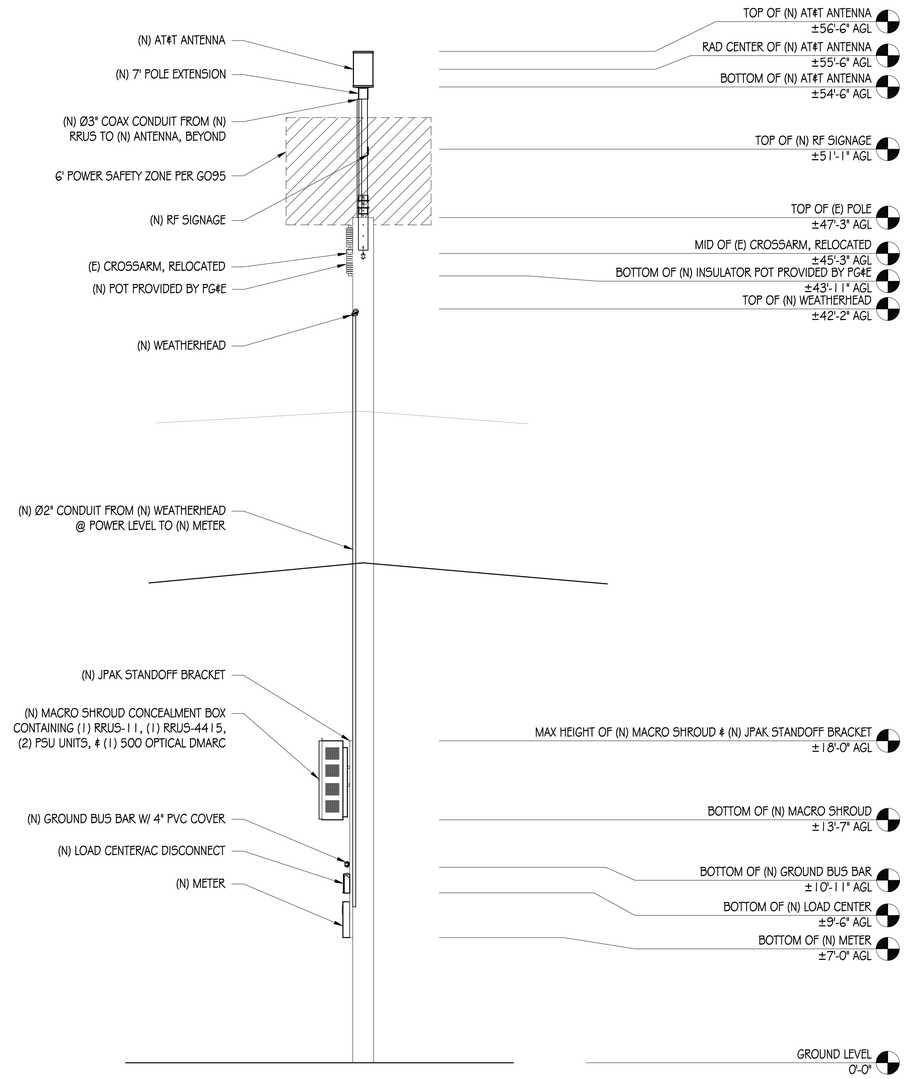

NEW NORTHWEST ELEVATION

1/4"=1'-0"

NOTE: ALL (N) EQUIPMENT TO BE PAINTED MESA BROWN

at&t

AT&T MOBILITY
5001 EXECUTIVE PARKWAY
SAN RAMON, CA 94583

SURESITE
Infrastructure experts. Small cell leaders.
36 EXECUTIVE PARK, SUITE 210
IRVINE, CA 92614

PRECISION DESIGN & Drafting, INC.
Phone: (530) 823-6546 www.pdnd.com
11768 Atwood Rd, Suite 20 Auburn, CA 95603

THESE PLANS AND SPECIFICATIONS, AS INSTRUMENTS OF SERVICE, ARE AND SHALL REMAIN THE PROPERTY OF PRECISION DESIGN & DRAFTING INC. WHETHER THE PROJECT FOR WHICH THEY ARE MADE ARE EXECUTED OR NOT. THE REPRODUCTION, PUBLICATION OR USE OF THESE PLANS AND SPECIFICATIONS BY OTHERS ON OTHER PROJECTS WITHOUT PRIOR WRITTEN CONSENT OF THE ENGINEER. Copyright©2013, PRECISION DESIGN & DRAFTING INC. - ALL RIGHTS RESERVED.

REGISTERED PROFESSIONAL ENGINEER
BRENT A. McCOMB
C 69891
EXP 09-30-18
CIVIL
STATE OF CALIFORNIA

CRAN_RSFR_LOSAO_013

ROW ADJCT TO 499 W EDITH AVE
LOS ALTOS HILLS, CA 94022

ISSUE STATUS

△	DATE	DESCRIPTION	
	06/14/18	CD 90%	
	03/13/19	CD 100%	

DRAWN BY:	I. BAKER
CHECKED BY:	T. DiCARLO
APPROVED BY:	B. McCOMB
DATE:	03/13/19

SHEET TITLE:

ELEVATIONS

SHEET NUMBER

A-3

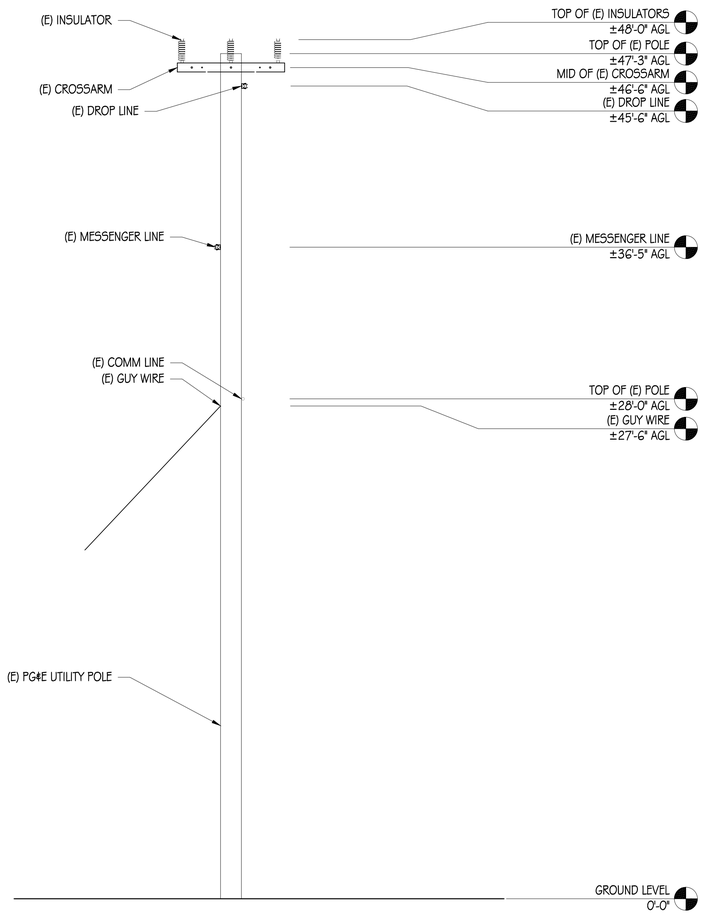

EXISTING NORTHEAST ELEVATION

1/4"=1'-0"

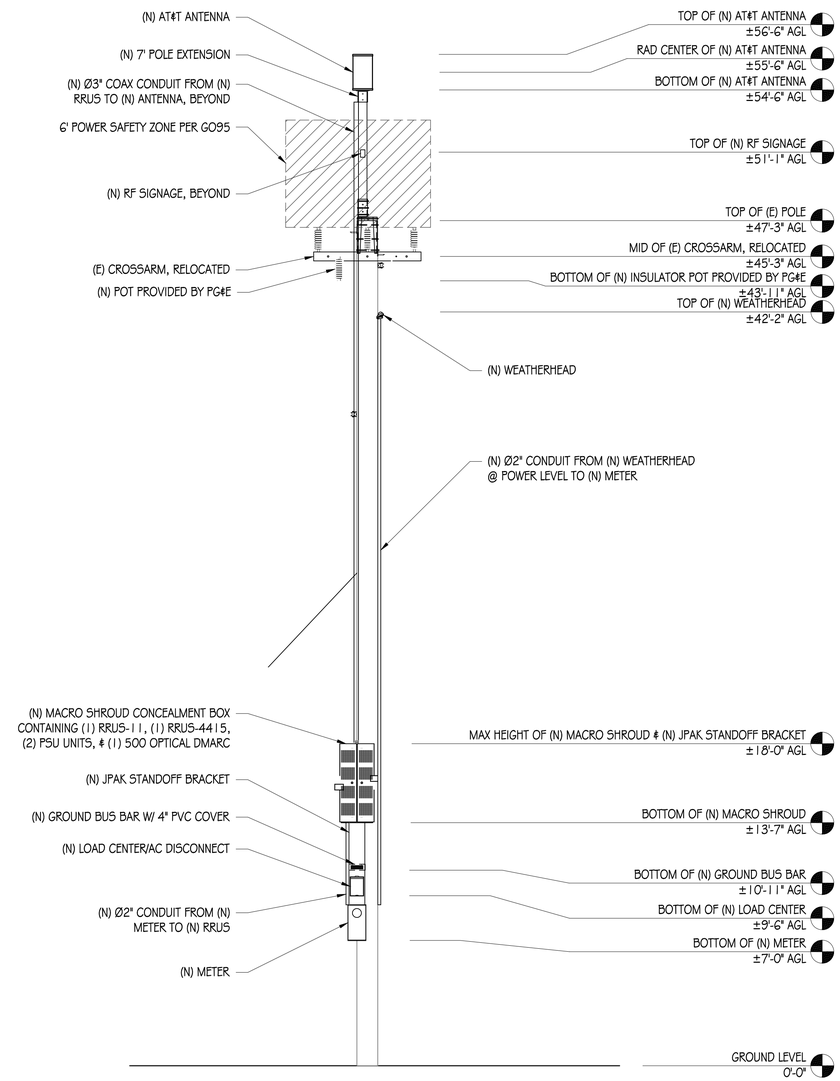

NEW NORTHEAST ELEVATION

1/4"=1'-0"

NOTE: ALL (N) EQUIPMENT TO BE PAINTED MESA BROWN

at&t

AT&T MOBILITY
5001 EXECUTIVE PARKWAY
SAN RAMON, CA 94583

SURESITE
Infrastructure experts. Small cell leaders.
36 EXECUTIVE PARK, SUITE 210
IRVINE, CA 92614

PRECISION DESIGN & Drafting, INC.
Phone: (530) 823-6546 www.pdnd.com
11768 Atwood Rd, Suite 20 Auburn, CA 95603

THESE PLANS AND SPECIFICATIONS, AS INSTRUMENTS OF SERVICE, ARE AND SHALL REMAIN THE PROPERTY OF PRECISION DESIGN & DRAFTING INC. WHETHER THE PROJECT FOR WHICH THEY ARE MADE ARE EXECUTED OR NOT. THE REPRODUCTION, ALTERATION OR USE OF THESE DRAWINGS AND SPECIFICATIONS ON OTHER PROJECTS WITHOUT PRIOR WRITTEN CONSENT OF THE ENGINEER. Copyright2013, PRECISION DESIGN & DRAFTING INC. ALL RIGHTS RESERVED.

REGISTERED PROFESSIONAL ENGINEER
BRET A. McCOMB
C 69891
EXP 09-30-18
CIVIL
STATE OF CALIFORNIA

CRAN_RSFR_LOSAO_013

ROW ADJCT TO 499 W EDITH AVE
LOS ALTOS HILLS, CA 94022

ISSUE STATUS

△	DATE	DESCRIPTION	
	06/14/18	CD 90%	
	03/13/19	CD 100%	

DRAWN BY:	I. BAKER
CHECKED BY:	T. DiCARLO
APPROVED BY:	B. McCOMB
DATE:	03/13/19

SHEET TITLE:

ELEVATIONS

SHEET NUMBER

A-4

POLE-TOP EXTENSION NOTES:

1. THIS UNIT MEETS GENERAL ORDER (G.O.) 95 REQUIREMENTS FOR STRENGTH IN CLASS 6 POLES AND THEREFORE MAY BE USED TO SUPPORT EQUIPMENT ON THESE CLASSES OF POLES. IT MAY BE USED ON LARGER CLASS POLES, BUT MAY NOT BE USED TO SUPPORT EQUIPMENT ON THEM.
2. THE UNIT MAY BE GUYED.
3. THE BRACKET IS MADE TO FIT POLES WITH DIAMETERS OF 8"-11". THEREFORE, DEPENDING UPON THE ACTUAL POLE-TOP DIAMETER, TO FIT POLES OF CLASS 3 AND SMALLER, A BRACKET ADAPTER MAY BE REQUIRED.
4. UNITS ARE SUPPLIED WITH THE WOOD BAYONET ASSEMBLED.
5. A POLE STEP KIT IS REQUIRED.
6. ATTACH THE BRACKET ASSEMBLY ACROSS THE LINE DIRECTION WITH THE CROSS ARM.
7. ALL DETAILS SHOWN ON THIS PAGE ARE FOR REFERENCE ONLY. THE POLE-TOP EXTENSION AND ANTENNA MOUNTING SYSTEMS ARE PER UTILITY COMPANY STANDARDS AND ARE SUBJECT TO CHANGE AT THEIR DISCRETION. BOTH THE POLE-TOP EXTENSION AND ANTENNA MOUNTING SYSTEM SHALL BE INSTALLED BY THE UTILITY COMPANY.

KMW FX-OM2L10H2

WIND AREA: 2.38 SQ FT
WEIGHT: TBD
DIMENSIONS: Ø16.0" X 24.0" TALL
RF CONNECTORS: (12) 4.3-10 FEMALE

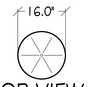

TOP VIEW

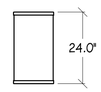

FRONT VIEW

1 ANTENNA
1/2"=1'

ERICSSON RRUS-4415

TOTAL WEIGHT: UNDER 46 LBS
DIMENSIONS: 16.5" X 13.4" X 5.9"

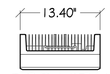

TOP VIEW

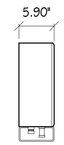

SIDE VIEW

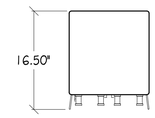

FRONT VIEW

2 RRUS-4415 DETAIL
1"=1'

ERICSSON RRUS-11

TOTAL WEIGHT: 55 LBS
DIMENSIONS: 19.7" TALL X 17" WIDE X 7.2" DEEP

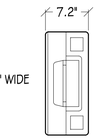

TOP VIEW

FRONT VIEW

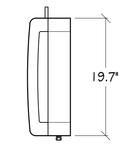

SIDE VIEW

3 RRUS-11 DETAIL
1"=1'

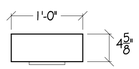

TOP VIEW

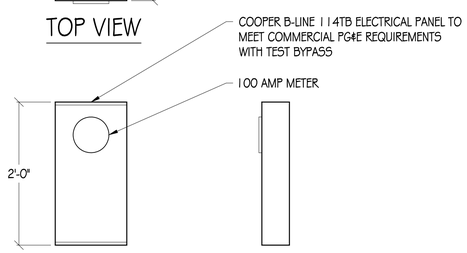

FRONT VIEW SIDE VIEW

4 METER DETAIL
1"=1'

ERICSSON PSU AC 08

DIMENSIONS: 2.72" X 10.79" X 7.09"
WEIGHT: 11.46 LBS

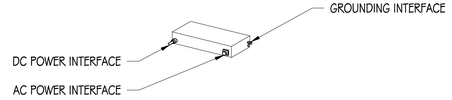

5 AC POWER MODULE
NTS

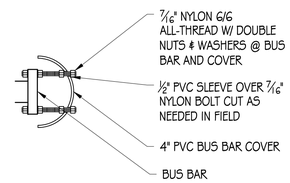

6 BUS BAR COVER
6"=1'

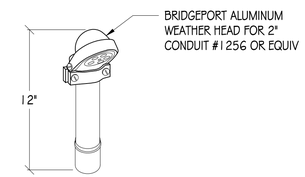

7 WEATHER HEAD
NTS

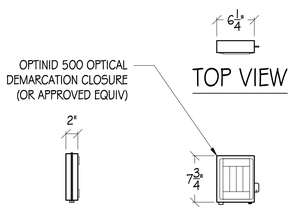

TOP VIEW

SIDE VIEW FRONT VIEW

8 OPTINID 500 OPTICAL DEMARC
1"=1'

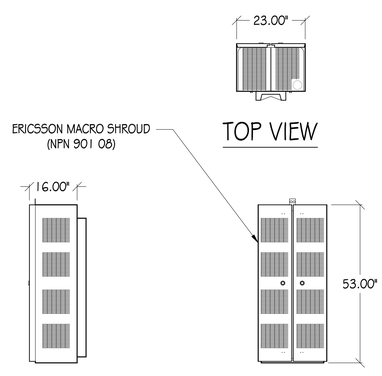

TOP VIEW

SIDE VIEW FRONT VIEW

9 MACRO SHROUD CONCEALMENT
1/2"=1'

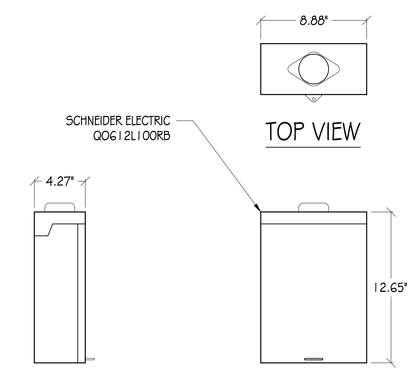

TOP VIEW

SIDE VIEW FRONT VIEW

10 LOAD CENTER/AC DISCONNECT
1"=6"

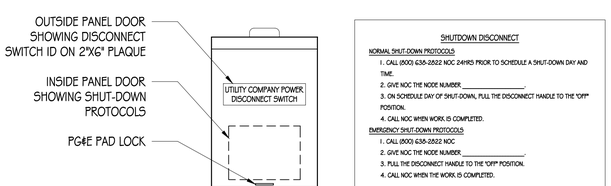

11 DISCONNECT SIGNAGE
3"=1'

NOTES:
1. SITE ID WILL BE SWITCH #, SITE # & SITE NAME
2. SIGN PROVIDED BY GC MOUNTED TO OUTSIDE OF SERVICE DISCONNECT

at&t
AT&T MOBILITY
5001 EXECUTIVE PARKWAY
SAN RAMON, CA 94583

SURESITE
Infrastructure experts. Small cell leaders.
36 EXECUTIVE PARK, SUITE 210
IRVINE, CA 92614

PRECISION DESIGN & Drafting, INC.
Phone: (530) 823-6546 www.pdnd.com
11768 Atwood Rd, Suite 20 Auburn, CA 95603

THESE PLANS AND SPECIFICATIONS, AS INSTRUMENTS OF SERVICE, ARE AND SHALL REMAIN THE PROPERTY OF PRECISION DESIGN & DRAFTING INC. WHETHER THE PROJECT FOR WHICH THEY ARE MADE ARE EXECUTED OR NOT. THE REPRODUCTION, ALTERATION OR USE OF THESE DRAWINGS AND SPECIFICATIONS ON OTHER PROJECTS WITHOUT PRIOR WRITTEN CONSENT OF THE ENGINEER. Copyright2013, PRECISION DESIGN & DRAFTING INC. ALL RIGHTS RESERVED.

REGISTERED PROFESSIONAL ENGINEER
BRET A. McCOMB
C 69891
EXP 09-30-18
CIVIL
STATE OF CALIFORNIA

CRAN_RSFR_LOSAO_013

ROW ADJCT TO 499 W EDITH AVE
LOS ALTOS HILLS, CA 94022

ISSUE STATUS

△	DATE	DESCRIPTION
	06/14/18	CD 90%
	03/13/19	CD 100%

DRAWN BY: I. BAKER
CHECKED BY: T. DiCARLO
APPROVED BY: B. McCOMB
DATE: 03/13/19

SHEET TITLE:
DETAILS

SHEET NUMBER
A-5

STRUCTURAL STEEL NOTES:

1. ALL STEEL CONSTRUCTION INCLUDING FABRICATION, ERECTION AND MATERIALS SHALL COMPLY WITH ALL REQUIREMENTS OF THE AISC SPECIFICATION FOR THE DESIGN, FABRICATION, AND ERECTION OF STRUCTURAL STEEL FOR BUILDINGS AND THE 2016 CBC.
2. ALL STRUCTURAL STEEL SHALL BE ASTM A36 UNLESS OTHERWISE NOTED. ALL WF (WIDE FLANGE) & WT (TEE) SHAPES TO BE ASTM A992 (F_Y=50,000 PSI) UNLESS NOTED OTHERWISE. ALL STRUCTURAL TUBING (TS OR HSS) SHALL BE ASTM A500 GRADE B (F_Y=46,000 PSI). ALL STEEL PIPE SHALL BE ASTM A53 (TYPE E OR S, GRADE B (F_Y=35,000 PSI)) SCHEDULE 40 WITH OUTSIDE DIAMETERS GIVEN UNLESS OTHERWISE NOTED.
3. ALL WELDING SHALL BE PERFORMED USING E70XX ELECTRODES AND SHALL CONFORM TO AISC & AWS D1.1. WHERE FILLET WELD SIZES ARE NOT SHOWN PROVIDE THE MINIMUM SIZE PER TABLE J2.4 IN THE AISC SPECIFICATION. PAINTED SURFACES SHALL BE TOUCHED UP.
4. ALL WELDING SHALL BE PERFORMED BY QUALIFIED, CERTIFIED WELDERS.
5. BOLTS SHALL BE GALVANIZED ASTM A325 MINIMUM. BOLTED CONNECTIONS SHALL BE BEARING TYPE. SEE PLANS FOR LOCATION, NUMBER, & SIZE OF BOLTS. SPECIAL INSPECTION NOT REQUIRED U.O.N.
6. THREADED RODS SHALL BE ASTM F593 CW 304/316 STAINLESS STEEL . BOLTED CONNECTIONS SHALL BE BEARING TYPE. SEE PLANS FOR LOCATION, NUMBER, & SIZE OF BOLTS.
7. ALL HOLES FOR BOLTED CONNECTIONS SHALL BE 1/16" LARGER THAN THE NOMINAL BOLT DIAMETER. USE STANDARD AISC GAGE AND PITCH FOR BOLTS EXCEPT AS NOTED OTHERWISE. HOLES FOR ANCHOR BOLTS IN BASE PLATES MAY BE AISC "OVERSIZE" HOLES WHERE ACCOMPANIED BY OVERSIZED HARDENED HDG WASHERS.
8. ALL SHOP FABRICATED STEEL STRUCTURAL MEMBERS FOR EXTERIOR USE SHALL BE HOT DIP GALVANIZED PER ASTM A123 AFTER FABRICATION & PAINTED PER CUSTOMER SPECIFICATIONS AS REQUIRED. STEEL FOR INTERIOR USE SHALL BE SHOP COAT OR GALVANIZED & PAINTED PER PLAN.
9. ALL FIELD FABRICATED GALVANIZED STEEL THAT IS CUT, GROUND, DRILLED, WELDED OR DAMAGED SHALL BE TREATED WITH "ZINC RICH" COLD GALVANIZING SPRAY OR COATING. NO RAW STEEL SHALL BE EXPOSED.
10. AT ALL WEB STIFFENER PLATES LEAVE 3/4"Ø (OR K, WHICHEVER IS LARGER) HOLE @ WEB/FLANGE INTERSECTION UNLESS NOTED OTHERWISE.

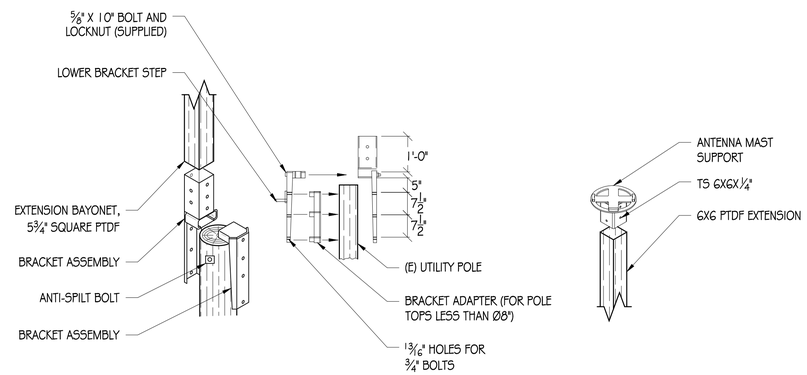

1 POLE TOP EXTENSION ASSEMBLY

1/2"=1'

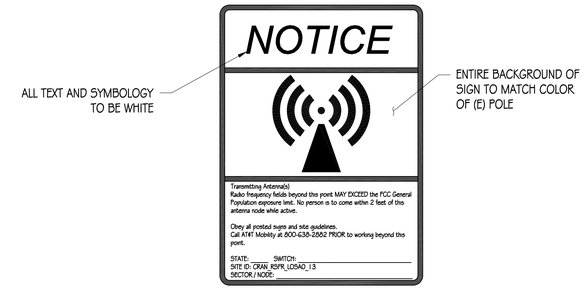

2 NOTICE SIGNAGE

NTS

NOTES:
NOTICE IS A VINYL STICKER ADHERED TO POLE

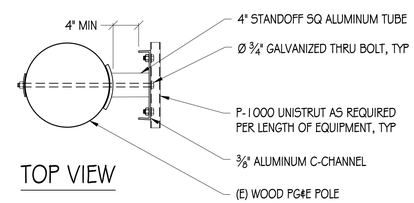

TOP VIEW

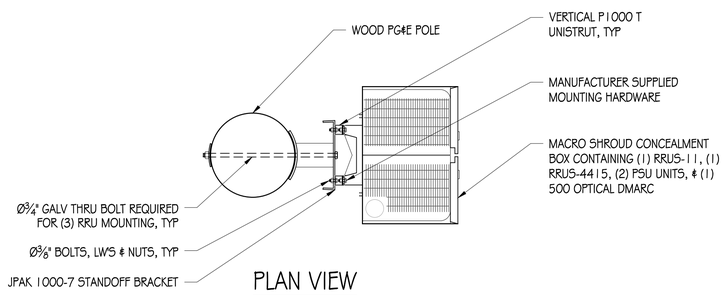

PLAN VIEW

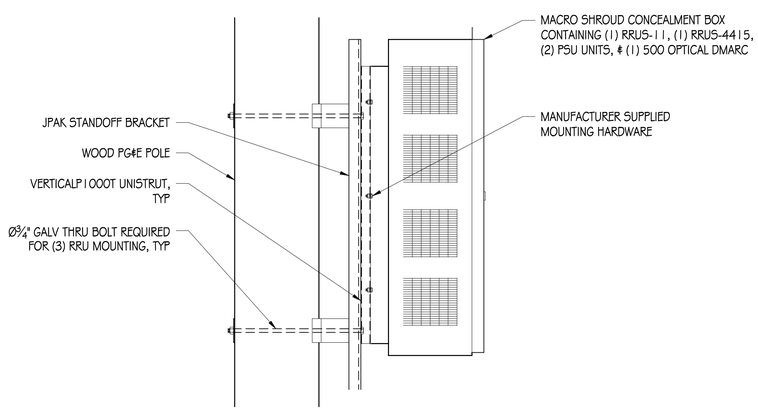

SIDE VIEW

3 RRU MOUNTING DETAIL

1"=1'

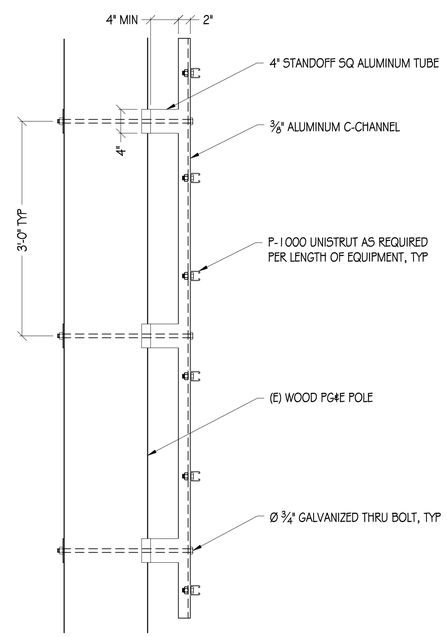

FRONT VIEW

4 JPAK STANDOFF DETAIL

1"=1'

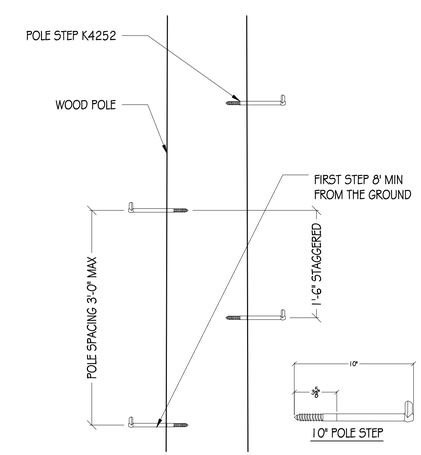

5 POLE STEP

1"=1'

NOTE: POLE STEP TO BE INSTALLED PER MANUFACTURER'S RECOMMENDATIONS

at&t
AT&T MOBILITY
5001 EXECUTIVE PARKWAY
SAN RAMON, CA 94583

SURESITE
Infrastructure experts. Small cell leaders.
36 EXECUTIVE PARK, SUITE 210
IRVINE, CA 92614

PRECISION DESIGN & Drafting, INC.
Phone: (530) 823-6546 www.pdnd.com
11768 Atwood Rd, Suite 20 Auburn, CA 95603

THESE PLANS AND SPECIFICATIONS, AS INSTRUMENTS OF SERVICE, ARE AND SHALL REMAIN THE PROPERTY OF PRECISION DESIGN & DRAFTING INC. WHETHER THE PROJECT FOR WHICH THEY ARE MADE ARE EXECUTED OR NOT. THE REPRODUCTION, ALTERATION OR USE OF THESE DRAWINGS AND SPECIFICATIONS ON OTHER PROJECTS WITHOUT PRIOR WRITTEN CONSENT OF THE ENGINEER. Copyright©2013, PRECISION DESIGN & DRAFTING INC. - ALL RIGHTS RESERVED.

REGISTERED PROFESSIONAL ENGINEER
BRET A. McCOMB
C 69891
EXP 09-30-18
CIVIL
STATE OF CALIFORNIA

CRAN_RSFR_LOSAO_013

ROW ADJCT TO 499 W EDITH AVE
LOS ALTOS HILLS, CA 94022

ISSUE STATUS

△	DATE	DESCRIPTION
	06/14/18	CD 90%
	03/13/19	CD 100%

DRAWN BY:	I. BAKER
CHECKED BY:	T. DiCARLO
APPROVED BY:	B. McCOMB
DATE:	03/13/19

SHEET TITLE:

DETAILS

SHEET NUMBER

A-6

GENERAL ELECTRICAL NOTES:

1. PROVIDE ALL ELECTRICAL WORK & MATERIALS AS SHOWN ON THE DWGS, AS CALLED FOR HEREIN, & AS IS NECESSARY TO FURNISH A COMPLETE INSTALLATION.
2. THE INSTALLATION SHALL CONFORM TO THE REQUIREMENTS OF THE CURRENT ADOPTED CALIFORNIA ELECTRICAL CODE, STATE OF CALIFORNIA TITLE24, ALL OTHER APPLICABLE CODES AND ORDINANCES & THE REQUIREMENTS OF THE FIRE MARSHALL. ALL EQUIPMENT & WIRING SHALL BEAR THE APPROVAL STAMP OF UNDERWRITERS LABORATORY (UL) OR AN APPROVED TESTING LABORATORY, PAYMENT FOR ALL INSPECTION FEES AND PERMITS ARE PART OF THIS CONTRACT.
3. THE CONTRACTOR SHALL BE RESPONSIBLE FOR THE SAFETY AND GOOD CONDITION OF ALL MATERIALS & EQUIPMENT FOR THE ENTIRE INSTALLATION & UNIT COMPLETION OF WORK, ERECT & MAINTAIN APPROVED & SUITABLE BARRIERS, PROTECTIVE DEVICES & WARNING SIGNS, BE FULLY RESPONSIBLE FOR ANY LOSS OR INJURY TO PERSONS OR PROPERTY RESULTING FROM NEGLIGENCE AND/OR ENFORCEMENT OF ALL SAFETY PRECAUTIONS & WARNINGS.
4. COORDINATE THE ELECTRICAL INSTALLATION WITH ALL OTHER TRADES.
5. ALL SAW CUTTING, TRENCHING, BACK FILLING & PATCHING SHALL BE PART OF THIS CONTRACT.
6. FINALIZE ALL ELECTRICAL SERVICE ARRANGEMENTS, INCLUDING VERIFICATION OF LOCATIONS, DETAILS, COORDINATION OF THE INSTALLATION & PAYMENT OF ACCRUED CHARGES WITH LOCAL POWER COMPANY, VERIFY LOCATION FOR FACILITIES & DETAILS WITH POWER UTILITY, IN ADDITION TO THE REQUIREMENTS SHOWN IN THE CONTRACT DOCUMENTS, WORK SHALL COMPLY WITH CONSTRUCTION STANDARDS & SERVICE REQUIREMENTS OF THE RESPECTIVE UTILITIES, INCLUDING ANY SUPPLEMENTAL DWGS ISSUED & SHALL BE SUBJECT TO APPROVAL OF THESE UTILITIES.
7. ALL WIRING SHALL BE COPPER. INSULATION FOR BRANCH CIRCUIT CONDUCTORS SHALL BE TYPE "THWN" CONDUCTORS LARGER AND #6 AWG MAY BE TYPE "THWN" OR "TWN".
8. PROVIDE CONDUIT SEALS FOR ALL CONDUITS PENETRATING WEATHERPROOFING OR WEATHERPROOF ENCLOSURE ENVELOPE. MASTIC SEAL ALL CONDUIT OPENING PENETRATIONS COMPLETELY WATERTIGHT.
9. UNLESS SHOWN OTHERWISE, FUSED DISCONNECT SWITCHES SHALL BE PROVIDED WITH LOW-PEAK, SIDUAL ELEMENT FUSES SIZED TO EQUIPMENT NAMEPLATE FUSE CURRENT RATING. MOTOR STARTERS SHALL BE PROVIDED WITH SIMILARLY SIZED FUSIBLE ELEMENTS, SWITCHES AND OTHER OUTDOOR EQUIPMENT SHALL BE RATED NEMA 3R AND/OR UL LISTED FOR WET ENVIRONMENT.
10. THE CONTRACTOR SHALL BE RESPONSIBLE FOR TESTING THE GROUNDING SYSTEM AND ENSURING A 5 OHM OR LESS GROUNDING PATH, ADDITIONAL GROUND RODS AND/OR CHEMICAL ROD SYSTEM SHALL BE USED TO ACHIEVE THIS REQUIREMENT IF THE GIVEN DESIGN CANNOT BE MADE TO ACHIEVE THIS REQUIREMENT.

POWER AND TELCO NOTES:

1. POWER AND TELCO POINTS OF CONNECTION AND ANY EASEMENTS ARE PRELIMINARY AND SUBJECT TO CHANGE BY THE UTILITY COMPANIES.
2. CONTRACTOR SHALL COORDINATE WITH UTILITY COMPANY FOR FINAL AND EXACT WORK/MATERIALS REQUIREMENTS AND CONSTRUCT TO UTILITY ENGINEERING PLANS AND SPECIFICATIONS ONLY WHERE APPLICABLE PER PROJECT SCOPE OF WORK.
3. CONTRACTOR SHALL FURNISH AND INSTALL CONDUIT, PULL WIRES, CABLE PULL BOXES, CONCRETE ENCASEMENT OF CONDUIT, TRANSFORMER PAD, BARRIERS, POLE RISER TRENCHING, BACK FILL, AND UTILITY FEES, AND INCLUDE REQUIREMENTS IN SCOPE.
4. CONTRACTOR SHALL LABEL ALL MAIN DISCONNECT SWITCHES AS REQUIRED BY CODE.
5. CONTRACTOR SHALL PROVIDE METER WITH DIST. PANEL AND BREAKERS FOR POWER TO THE BTS UNITS AND THE BTS/ UTILITY CABINET.
6. ALL SERVICE EQUIPMENT AND INSTALLATIONS SHALL COMPLY WITH THE N.E.C. AND UTILITY COMPANY AND LOCAL CODE REQUIREMENTS.
7. CONTRACTOR SHALL PROVIDE ELECTRICAL SERVICE ENTRANCE EQUIPMENT WITH FAULT CURRENT RATINGS GREATER THAN THE AVAILABLE FAULT CURRENT FROM THE POWER UTILITY.
8. FIELD ROUTE CONDUIT TO CABINETS AS REQUIRED.
9. MAXIMUM ONE WAY CIRCUIT RUN NOT TO EXCEED 75 FEET.

LOAD SCHEDULE

MAKE/MODEL	QUANTITY	DESCRIPTION	DIMENSIONS	WEIGHT	TX/RX	MAX TRANSMIT POWER	W	kW
ERICSSON RRUS-4415	1	RRUS	16.5" X 13.4" X 5.9"	46 LBS	2T/2R	4 X 40W	1100	1.10
ERICSSON RRUS-11	1	RRUS	19.7" X 17.0" X 7.2"	55 LBS	2T/2R	2 X 40W	520	0.52
NEMA 3R ENCLOSURE	1	DISCONNECT	12.7" X 8.9" X 4.3"	40 LBS (MAX)	N/A	N/A	N/A	N/A

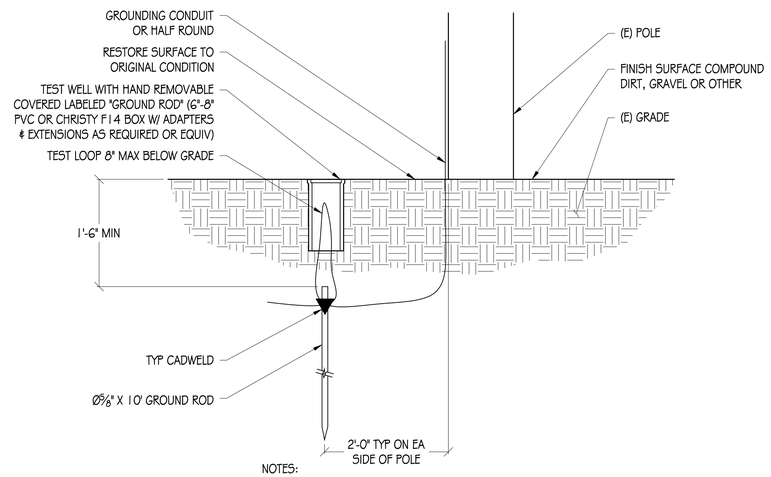

NOTES:

1. IF GROUND ROD IS INSTALLED ON SIDEWALK AREA, CORE DRILL SIDEWALK PRIOR TO INSTALLING INSPECTION WELL
2. EXPOSED CONCRETE TO HAVE BROOM FINISH

1 POLE GROUNDING DETAIL

NTS

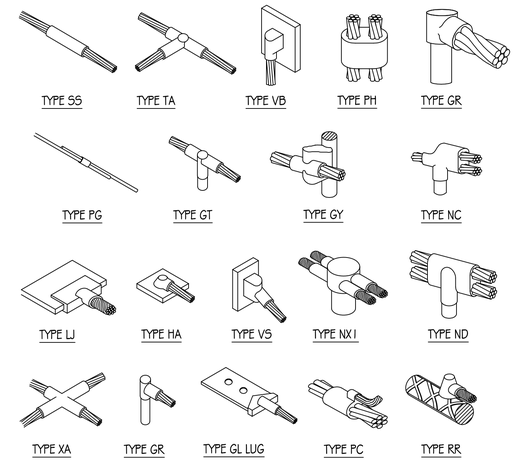

4 EXOTHERMIC WELD DETAILS

NTS

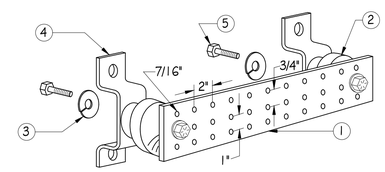

NOTES:

1. GALVANIZED STEEL GROUND BAR, HOLE CENTERS TO MATCH NEMA DOUBLE LUG CONFIGURATION. (ACTUAL GROUND BAR SIZE WILL VARY BASED ON NUMBER OF GROUND CONNECTIONS)
2. INSULATORS, NEWTON INSTRUMENT CAT. NO. 3061-4 OR APPROVED EQUAL
3. 5/8" LOCK WASHERS, NEWTON INSTRUMENT CO., CAT. NO. 3015-8 OR APPROVED EQUAL
4. WALL MOUNTING BRACKET, NEWTON INSTRUMENT CO., CAT NO. A-6056 OR APPROVED EQUAL
5. 5/8-11 X 1" HHCS BOLTS, NEWTON INSTRUMENT CO., CAT NO. 3012-1 OR APPROVED EQUAL
6. INSULATORS SHALL BE ELIMINATED WHEN BONDING DIRECTLY TO TOWER/MONOPINE STRUCTURE. CONNECTION TO TOWER/MONOPINE STRUCTURE SHALL BE PER MANUFACTURERS RECOMMENDATIONS.

5 GROUND BAR DETAIL

NTS

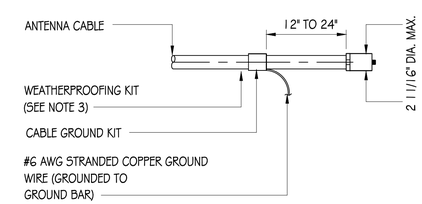

NOTES:

1. DO NOT INSTALL CABLE GROUND KIT AT A BEND AND ALWAYS DIRECT GROUND WIRE DOWN TO GROUND BAR.
2. GROUNDING KIT SHALL BE TYPE AND PART NUMBER AS SUPPLIED OR RECOMMENDED BY CABLE MANUFACTURER.
3. WEATHER PROOFING SHALL BE (TYPE AND PART NUMBER AS SUPPLIED OR RECOMMENDED BY CABLE MANUFACTURER.)

6 GND KIT DETAIL

NTS

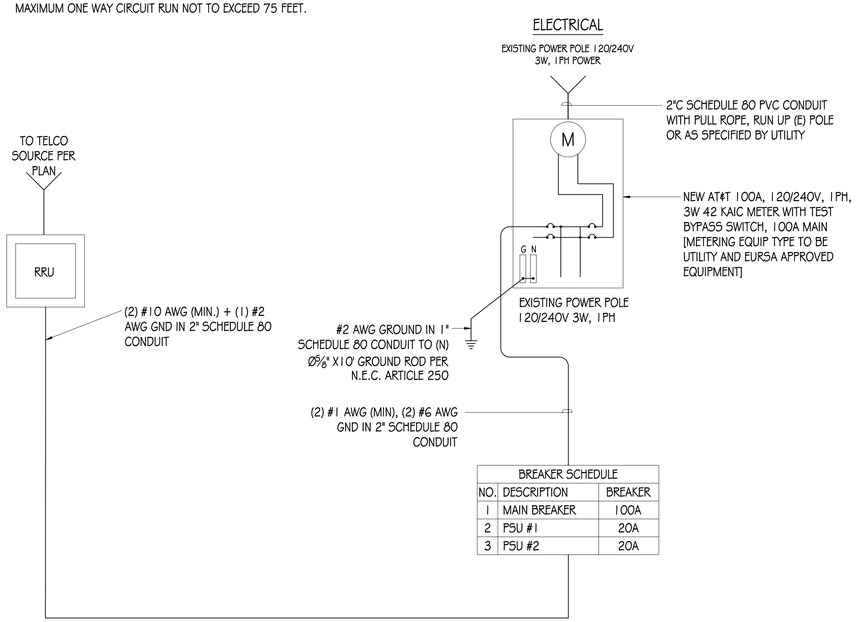

BREAKER SCHEDULE		
NO.	DESCRIPTION	BREAKER
1	MAIN BREAKER	100A
2	PSU #1	20A
3	PSU #2	20A

SINGLE-LINE DIAGRAM

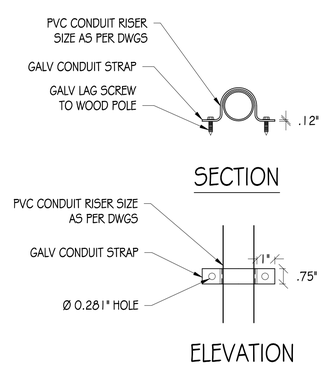

2 CONDUIT RISER DETAIL

NTS

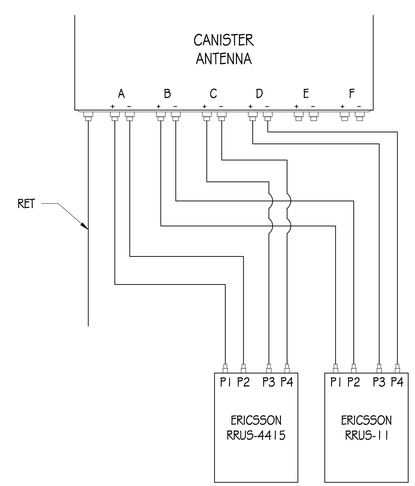

3 WIRE DIAGRAM DETAIL

NTS

at&t
AT&T MOBILITY
5001 EXECUTIVE PARKWAY
SAN RAMON, CA 94583

SURESITE
Infrastructure experts. Small cell leaders.
36 EXECUTIVE PARK, SUITE 210
IRVINE, CA 92614

PRECISION DESIGN & Drafting, INC.
Phone: (530) 823-6546 www.pdnd.com
11768 Atwood Rd, Suite 20 Auburn, CA 95603

THESE PLANS AND SPECIFICATIONS, AS INSTRUMENTS OF SERVICE, ARE AND SHALL REMAIN THE PROPERTY OF PRECISION DESIGN & DRAFTING INC. WHETHER THE PROJECT FOR WHICH THEY ARE MADE IS EXECUTED OR NOT. THE REPRODUCTION, PUBLICATION OR USE OF THESE PLANS AND SPECIFICATIONS BY OTHERS IS PROHIBITED ON OTHER PROJECTS WITHOUT PRIOR WRITTEN CONSENT OF THE ENGINEER. Copyright2013, PRECISION DESIGN & DRAFTING INC. - ALL RIGHTS RESERVED.

REGISTERED PROFESSIONAL ENGINEER
BRET A. McCOMB
C 69891
EXP 09-30-18
CIVIL
STATE OF CALIFORNIA

CRAN_RSFR_LOSAO_013

ROW ADJCT TO 499 W EDITH AVE
LOS ALTOS HILLS, CA 94022

ISSUE STATUS

△	DATE	DESCRIPTION
	06/14/18	CD 90%
	03/13/19	CD 100%

DRAWN BY:	I. BAKER
CHECKED BY:	T. DiCARLO
APPROVED BY:	B. McCOMB
DATE:	03/13/19

SHEET TITLE:

SINGLE-LINE DIAGRAM & DETAILS

SHEET NUMBER

E-1

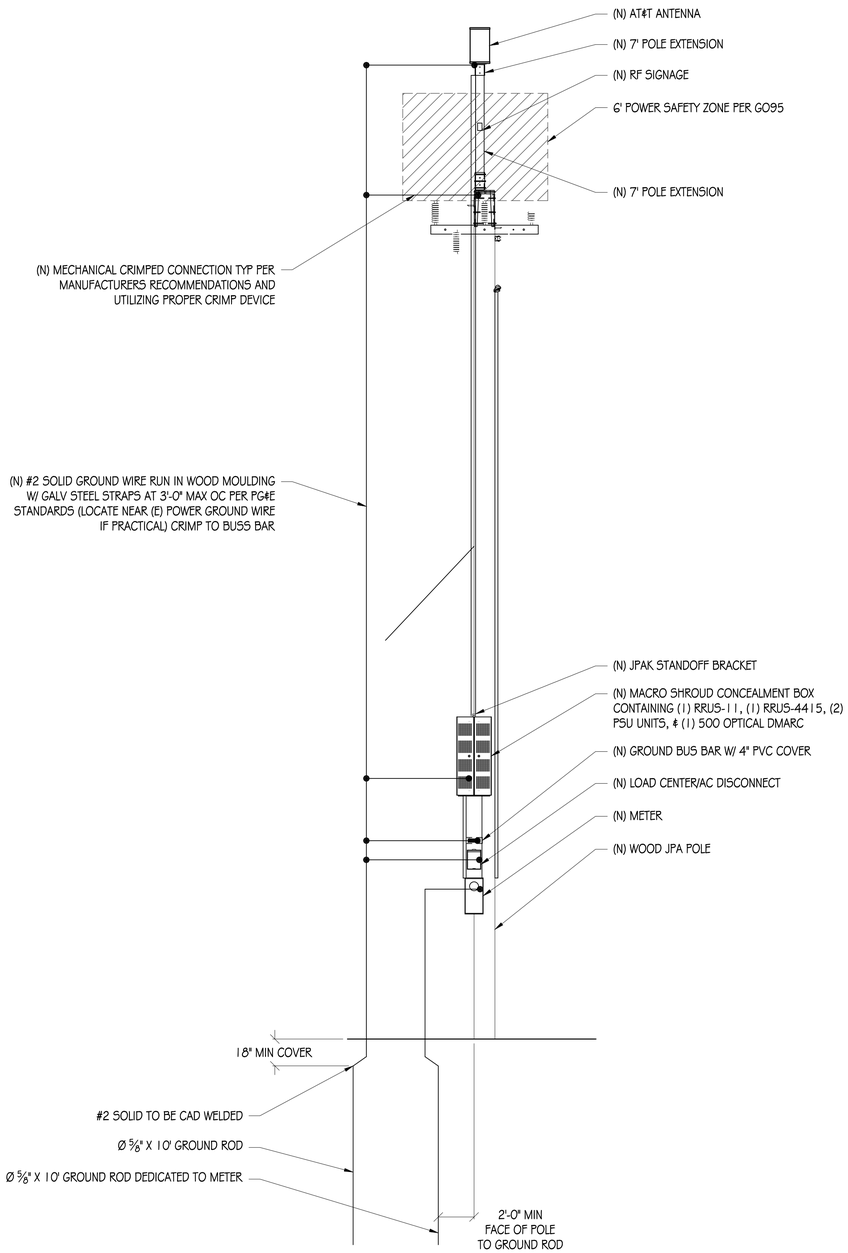

POLE GROUNDING DIAGRAM

NTS

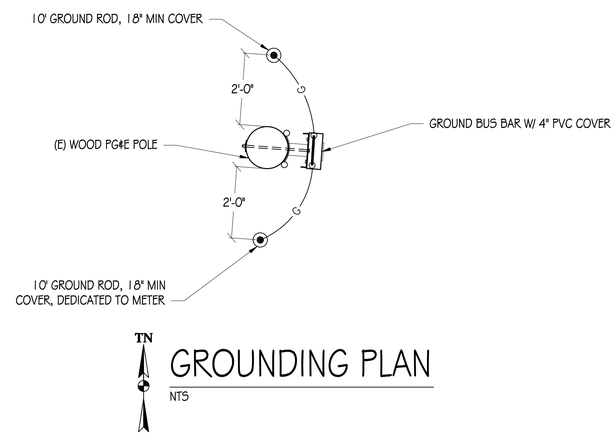

GROUNDING PLAN

NTS

at&t

AT&T MOBILITY
5001 EXECUTIVE PARKWAY
SAN RAMON, CA 94583

SURESITE
Infrastructure experts. Small cell leaders.
36 EXECUTIVE PARK, SUITE 210
IRVINE, CA 92614

PRECISION DESIGN & Drafting, INC.
Phone: (530) 823-6546 www.pdnd.com
11768 Atwood Rd, Suite 20 Auburn, CA 95603

THESE PLANS AND SPECIFICATIONS, AS INSTRUMENTS OF SERVICE, ARE AND SHALL REMAIN THE PROPERTY OF PRECISION DESIGN & DRAFTING INC. WHETHER THE PROJECT FOR WHICH THEY ARE MADE ARE EXECUTED OR NOT, THE REPRODUCTION, PUBLICATION OR USE OF THESE PLANS AND SPECIFICATIONS ON OTHER PROJECTS WITHOUT PRIOR WRITTEN CONSENT OF THE ENGINEER. Copyright©2013, PRECISION DESIGN & DRAFTING INC. - ALL RIGHTS RESERVED.

REGISTERED PROFESSIONAL ENGINEER
BRENT A. McCOMB
C 69891
EXP 09-30-18
CIVIL
STATE OF CALIFORNIA

CRAN_RSFR_LOSAO_013

ROW ADJCT TO 499 W EDITH AVE
LOS ALTOS HILLS, CA 94022

ISSUE STATUS

△	DATE	DESCRIPTION	
	06/14/18	CD 90%	
	03/13/19	CD 100%	

DRAWN BY:	I. BAKER
CHECKED BY:	T. DiCARLO
APPROVED BY:	B. McCOMB
DATE:	03/13/19

SHEET TITLE:

GROUNDING DIAGRAMS

SHEET NUMBER

E-2