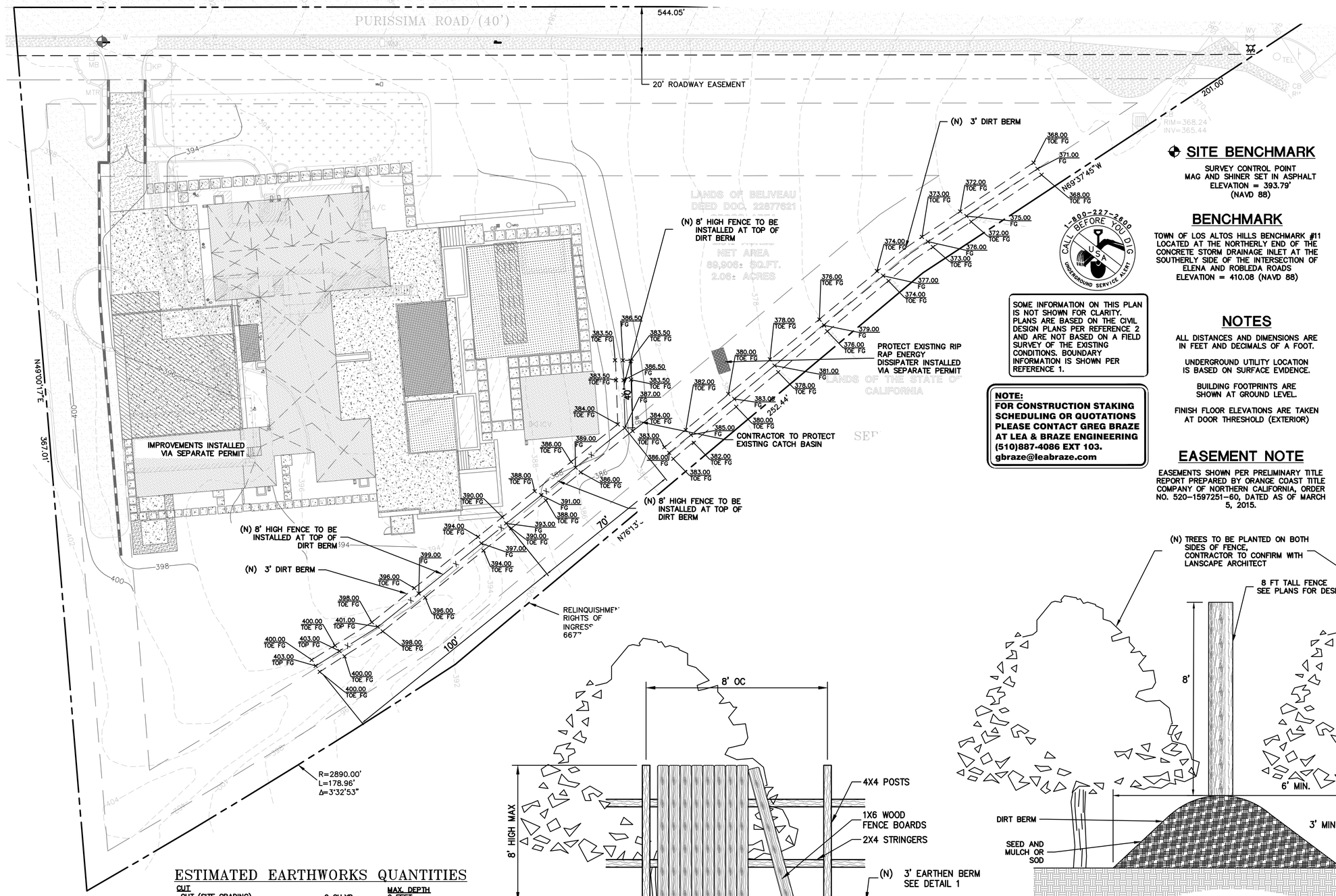

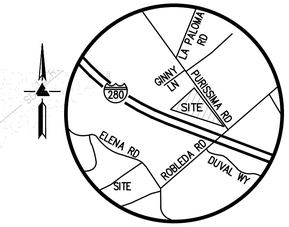

VICINITY MAP

NO SCALE

SITE BENCHMARK

SURVEY CONTROL POINT
MAG AND SHINER SET IN ASPHALT
ELEVATION = 393.79'
(NAVD 88)

BENCHMARK

TOWN OF LOS ALTOS HILLS BENCHMARK #11
LOCATED AT THE NORTHERLY END OF THE CONCRETE STORM DRAINAGE INLET AT THE SOUTHERLY SIDE OF THE INTERSECTION OF ELENA AND ROBLEDA ROADS
ELEVATION = 410.08 (NAVD 88)

SOME INFORMATION ON THIS PLAN IS NOT SHOWN FOR CLARITY. PLANS ARE BASED ON THE CIVIL DESIGN PLANS PER REFERENCE 2 AND ARE NOT BASED ON A FIELD SURVEY OF THE EXISTING CONDITIONS. BOUNDARY INFORMATION IS SHOWN PER REFERENCE 1.

NOTE:
FOR CONSTRUCTION STAKING SCHEDULING OR QUOTATIONS PLEASE CONTACT GREG BRAZE AT LEA & BRAZE ENGINEERING (510)887-4086 EXT 103.
gbraze@leabraze.com

NOTES

ALL DISTANCES AND DIMENSIONS ARE IN FEET AND DECIMALS OF A FOOT.

UNDERGROUND UTILITY LOCATION IS BASED ON SURFACE EVIDENCE.

BUILDING FOOTPRINTS ARE SHOWN AT GROUND LEVEL.

FINISH FLOOR ELEVATIONS ARE TAKEN AT DOOR THRESHOLD (EXTERIOR)

EASEMENT NOTE

EASEMENTS SHOWN PER PRELIMINARY TITLE REPORT PREPARED BY ORANGE COAST TITLE COMPANY OF NORTHERN CALIFORNIA, ORDER NO. 520-1597251-60, DATED AS OF MARCH 5, 2015.

OWNER'S INFORMATION

OWNER:
PURISSIMA CONTEMPORARY RESIDENCE
26270 PURISSIMA ROAD
C/O PATRICIA GUEVARA. AE3 PARTNERS
400 MONTGOMERY STREET, SUITE 805
SAN FRANCISCO, CA

APN: 182-06-034

REFERENCES

THIS FENCE PLAN IS SUPPLEMENTAL TO:

1. TOPOGRAPHIC SURVEY BY LEA & BRAZE ENGINEERING INC., ENTITLED:
   "TOPOGRAPHIC SURVEY"
   26270 PURISSIMA ROAD
   LOS ALTOS HILLS, CA
   DATE: 05-01-15
   JOB#: 2150271SU
2. GRADING AND DRAINAGE BY LEA & BRAZE ENGINEERING INC., ENTITLED:
   "GRADING AND DRAINAGE PLAN"
   26270 PURISSIMA ROAD
   LOS ALTOS HILLS, CA
   DATE: 07-13-15
   JOB#: 2150241

THE CONTRACTOR SHALL REFER TO THE ABOVE NOTED SURVEY AND PLAN, AND SHALL VERIFY BOTH EXISTING AND PROPOSED ITEMS ACCORDING TO THEM.

ESTIMATED EARTHWORKS QUANTITIES

CUT		MAX. DEPTH
CUT (SITE GRADING)	0 CU.YD.	0 FEET
CUT (WITHIN BUILDING FOOTPRINT)	0 CU.YD.	0 FEET
CUT TOTAL OVERALL VOLUME	0 CU.YD.	
FILL		**MAX. DEPTH**
FILL (SITE GRADING)	211 CU.YD.	3 FEET BACK YARD
FILL (WITHIN BUILDING FOOTPRINT)	0 CU.YD.	0 FEET
FILL TOTAL OVERALL VOLUME	211 CU.YD.	
TOTAL EXPORT:	0 CU.YD.	
TOTAL IMPORT:	211 CU.YD.	

NOTE: GRADING QUANTITIES REPRESENT BANK YARDAGE. IT DOES NOT INCLUDE ANY SWELLING OR SHRINKAGE FACTORS AND IS INTENDED TO REPRESENT IN-SITU CONDITIONS. QUANTITIES DO NOT INCLUDE OVER-EXCAVATION, TRENCHING, STRUCTURAL FOUNDATIONS OR PIERS, OR POOL EXCAVATION (IF ANY). NOTE ADDITIONAL EARTHWORKS, SUCH AS KEYWAYS OR BENCHING MAY BE REQUIRED BY THE GEOTECHNICAL ENGINEER IN THE FIELD AT TIME OF CONSTRUCTION. CONTRACTOR TO VERIFY QUANTITIES

0 10 20 40
SCALE: 1" = 20'

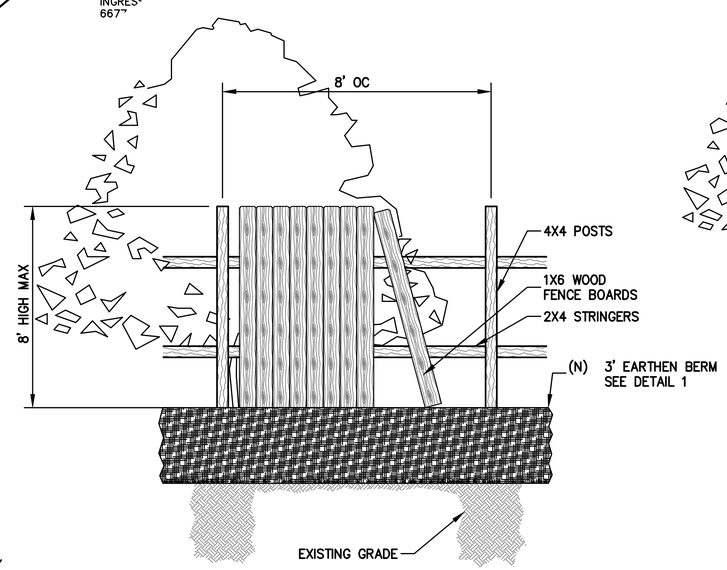

2 / EX-F **WOOD RAIL FENCE (SOLID)**
NTS

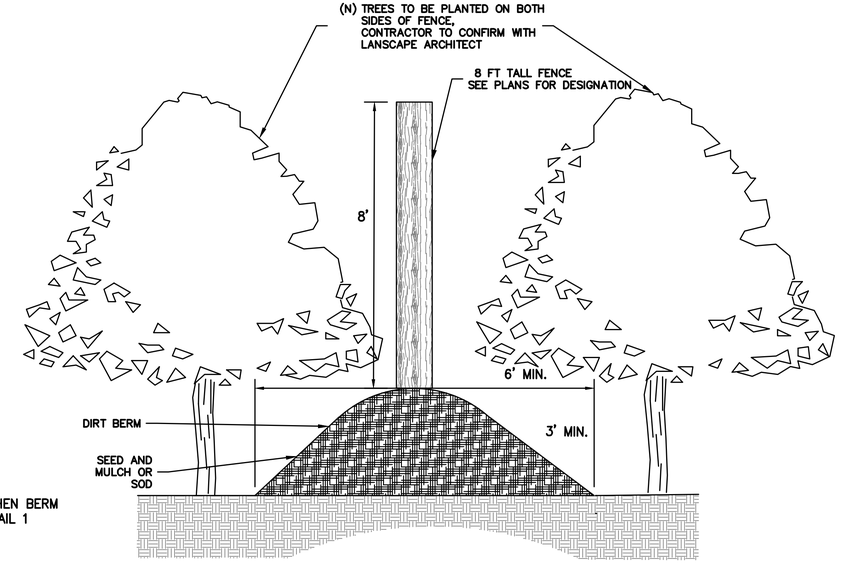

NOTES:

1. GRADIENT ALONG THE FLOW PATH SHALL HAVE A POSITIVE GRADE TO ASSURE DRAINAGE, BUT SHALL NOT BE SO STEEP AS TO RESULT IN EROSION DUE TO HIGH VELOCITY.
2. THE AREA UP-SLOPE OF THE BERM AT THE BASE OF INITIAL FILL SLOPE SHALL HAVE A MINIMUM SLOPE OF 0.5%.
3. COMPACT BERMS WITH HAND HELP COMPACTION DEVICE, TRACKHOE, BUCKET OR OTHER METHOD CAPABLE OF ATTAINING 85% DENSITY.

1 / EX-F **DIRT BERM**
1:2

REGISTERED PROFESSIONAL ENGINEER
PETER CARLINO
No. C79555
CIVIL
STATE OF CALIFORNIA
ORIGINAL SIGNATURES IN BLUE INK

LEA & BRAZE ENGINEERING, INC.
CIVIL ENGINEERS • LAND SURVEYORS
BAY AREA REGION
2495 INDUSTRIAL PKWY WEST
HAYWARD, CALIFORNIA 94545
(P) (510) 887-4086
(F) (510) 887-3019
SACRAMENTO REGION
3017 DOUGLAS BLVD. # 300
ROSEVILLE, CA 95661
(P) (916)966-1338
(F) (916)797-7363
WWW.LEABRAZE.COM

26270 PURISSIMA ROAD
LOS ALTOS HILLS, CALIFORNIA

SANTA CLARA COUNTY

APN: 182-06-034

FENCE EXHIBIT

REVISIONS	BY
–	–
–	–
–	–
–	–
–	–

JOB NO:	2150241
DATE:	07-10-20
SCALE:	1" = 20'
DESIGN BY:	CA
DRAWN BY:	TB
SHEET NO:	EX-F

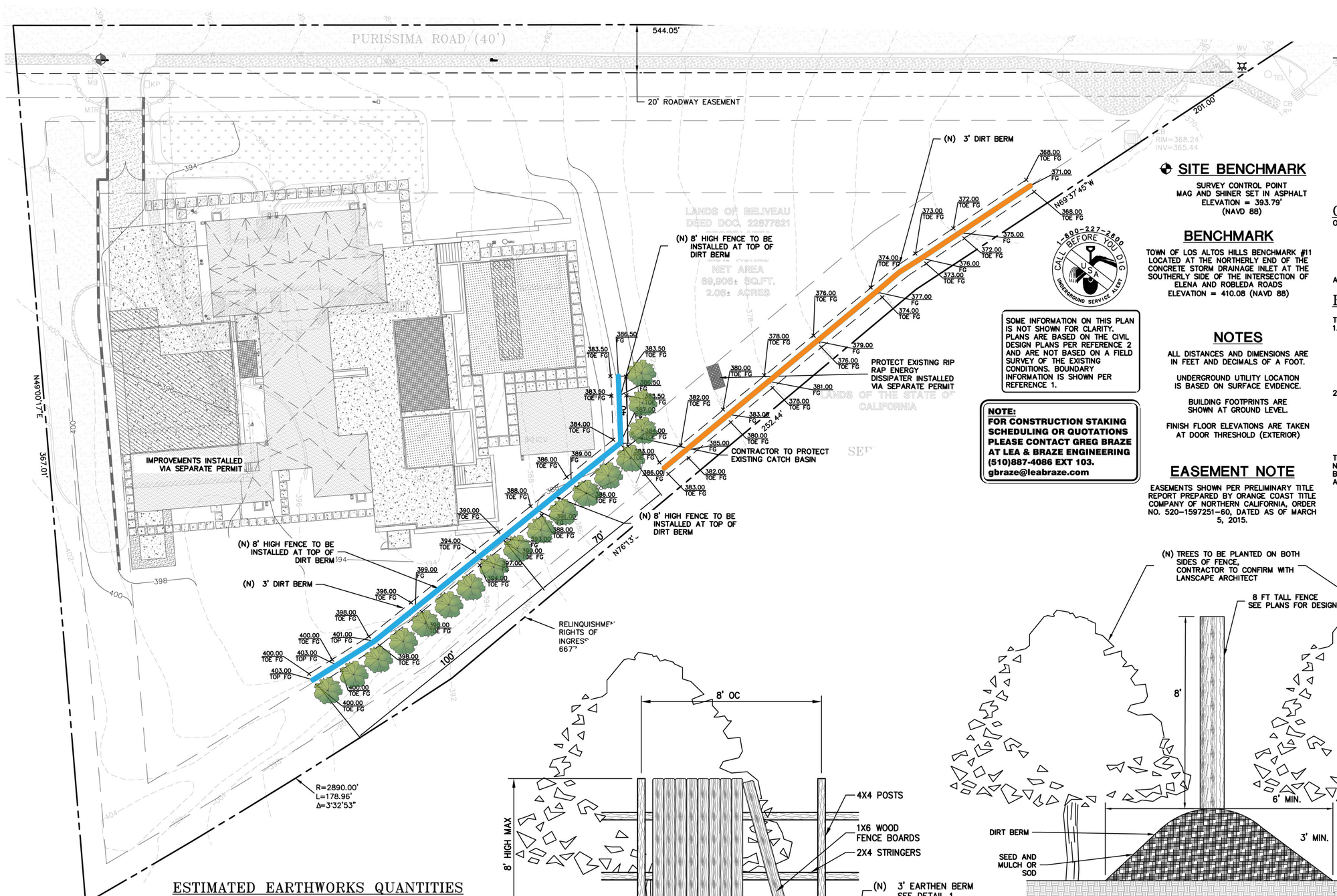

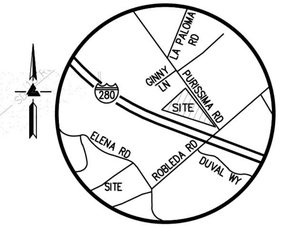

VICINITY MAP

NO SCALE

SITE BENCHMARK

SURVEY CONTROL POINT
MAG AND SHINER SET IN ASPHALT
ELEVATION = 393.79'
(NAVD 88)

BENCHMARK

TOWN OF LOS ALTOS HILLS BENCHMARK #11 LOCATED AT THE NORTHERLY END OF THE CONCRETE STORM DRAINAGE INLET AT THE SOUTHERLY SIDE OF THE INTERSECTION OF ELENA AND ROBLEDA ROADS
ELEVATION = 410.08 (NAVD 88)

SOME INFORMATION ON THIS PLAN IS NOT SHOWN FOR CLARITY. PLANS ARE BASED ON THE CIVIL DESIGN PLANS PER REFERENCE 2 AND ARE NOT BASED ON A FIELD SURVEY OF THE EXISTING CONDITIONS. BOUNDARY INFORMATION IS SHOWN PER REFERENCE 1.

NOTE:
FOR CONSTRUCTION STAKING SCHEDULING OR QUOTATIONS PLEASE CONTACT GREG BRAZE AT LEA & BRAZE ENGINEERING (510)887-4086 EXT 103.
gbraze@leabraze.com

NOTES

ALL DISTANCES AND DIMENSIONS ARE IN FEET AND DECIMALS OF A FOOT.

UNDERGROUND UTILITY LOCATION IS BASED ON SURFACE EVIDENCE.

BUILDING FOOTPRINTS ARE SHOWN AT GROUND LEVEL.

FINISH FLOOR ELEVATIONS ARE TAKEN AT DOOR THRESHOLD (EXTERIOR)

EASEMENT NOTE

EASEMENTS SHOWN PER PRELIMINARY TITLE REPORT PREPARED BY ORANGE COAST TITLE COMPANY OF NORTHERN CALIFORNIA, ORDER NO. 520-1597251-60, DATED AS OF MARCH 5, 2015.

OWNER'S INFORMATION

OWNER:
PURISSIMA CONTEMPORARY RESIDENCE
26270 PURISSIMA ROAD
C/O PATRICIA GUEVARA. AE3 PARTNERS
400 MONTGOMERY STREET, SUITE 805
SAN FRANCISCO, CA

APN: 182-06-034

REFERENCES

THIS FENCE PLAN IS SUPPLEMENTAL TO:

1. TOPOGRAPHIC SURVEY BY LEA & BRAZE ENGINEERING INC., ENTITLED:
   "TOPOGRAPHIC SURVEY"
   26270 PURISSIMA ROAD
   LOS ALTOS HILLS, CA
   DATE: 05-01-15
   JOB#: 2150271SU
2. GRADING AND DRAINAGE BY LEA & BRAZE ENGINEERING INC., ENTITLED:
   "GRADING AND DRAINAGE PLAN"
   26270 PURISSIMA ROAD
   LOS ALTOS HILLS, CA
   DATE: 07-13-15
   JOB#: 2150241

THE CONTRACTOR SHALL REFER TO THE ABOVE NOTED SURVEY AND PLAN, AND SHALL VERIFY BOTH EXISTING AND PROPOSED ITEMS ACCORDING TO THEM.

ESTIMATED EARTHWORKS QUANTITIES

CUT		MAX. DEPTH
CUT (SITE GRADING)	0 CU.YD.	0 FEET
CUT (WITHIN BUILDING FOOTPRINT)	0 CU.YD.	0 FEET
CUT TOTAL OVERALL VOLUME	0 CU.YD.	
FILL		**MAX. DEPTH**
FILL (SITE GRADING)	211 CU.YD.	3 FEET BACK YARD
FILL (WITHIN BUILDING FOOTPRINT)	0 CU.YD.	0 FEET
FILL TOTAL OVERALL VOLUME	211 CU.YD.	
TOTAL EXPORT:	0 CU.YD.	
TOTAL IMPORT:	211 CU.YD.	

NOTE: GRADING QUANTITIES REPRESENT BANK YARDAGE. IT DOES NOT INCLUDE ANY SWELLING OR SHRINKAGE FACTORS AND IS INTENDED TO REPRESENT IN-SITU CONDITIONS. QUANTITIES DO NOT INCLUDE OVER-EXCAVATION, TRENCHING, STRUCTURAL FOUNDATIONS OR PIERS, OR POOL EXCAVATION (IF ANY). NOTE ADDITIONAL EARTHWORKS, SUCH AS KEYWAYS OR BENCHING MAY BE REQUIRED BY THE GEOTECHNICAL ENGINEER IN THE FIELD AT TIME OF CONSTRUCTION. CONTRACTOR TO VERIFY QUANTITIES

0 10 20 40
SCALE: 1" = 20'

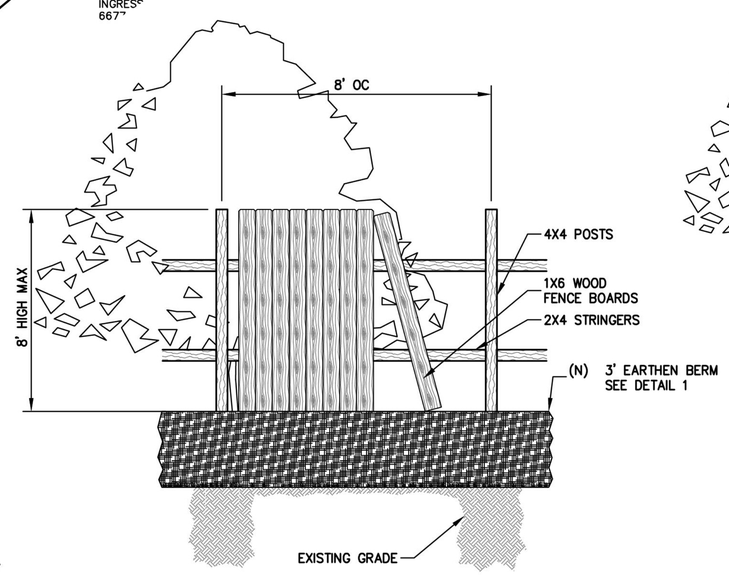

2 EX-F **WOOD RAIL FENCE (SOLID)**
NTS

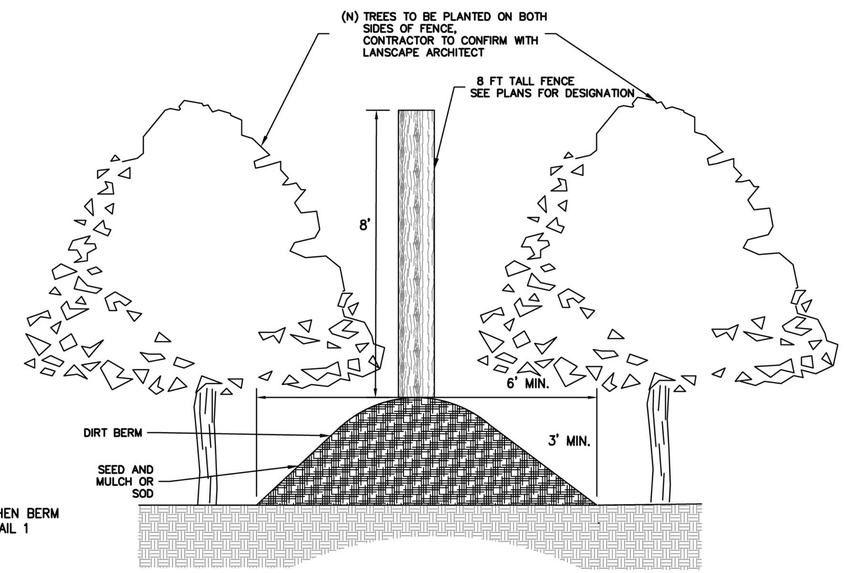

NOTES:

1. GRADIENT ALONG THE FLOW PATH SHALL HAVE A POSITIVE GRADE TO ASSURE DRAINAGE, BUT SHALL NOT BE SO STEEP AS TO RESULT IN EROSION DUE TO HIGH VELOCITY.
2. THE AREA UP-SLOPE OF THE BERM AT THE BASE OF INITIAL FILL SLOPE SHALL HAVE A MINIMUM SLOPE OF 0.5%.
3. COMPACT BERMS WITH HAND HELP COMPACTION DEVICE, TRACKHOE, BUCKET OR OTHER METHOD CAPABLE OF ATTAINING 85% DENSITY.

1 EX-F **DIRT BERM**
1:2

REGISTERED PROFESSIONAL ENGINEER PETER CARLINO No. C79555 CIVIL STATE OF CALIFORNIA
ORIGINAL SIGNATURES IN BLUE INK

LEA & BRAZE ENGINEERING, INC.
CIVIL ENGINEERS • LAND SURVEYORS
BAY AREA REGION
2495 INDUSTRIAL PKWY WEST
HAYWARD, CALIFORNIA 94545
(P) (510) 887-4086
(F) (510) 887-3019
SACRAMENTO REGION
3017 DOUGLAS BLVD. # 300
ROSEVILLE, CA 95661
(P) (916)966-1338
(F) (916)797-7363
WWW.LEABRAZE.COM

26270 PURISSIMA ROAD
LOS ALTOS HILLS, CALIFORNIA

SANTA CLARA COUNTY

APN: 182-06-034

FENCE EXHIBIT

REVISIONS	BY
–	–
–	–
–	–
–	–
–	–

JOB NO:	2150241
DATE:	07-10-20
SCALE:	1" = 20'
DESIGN BY:	CA
DRAWN BY:	TB
SHEET NO:	EX-F