Burke Road
Landscape Screening Submittal
08/06/2020

13505 Burke Road
Los Altos Hills, CA

Project Team

Owner:
Name: Jenny and Duston Williams
13505 Burke Road
Los Altos Hills, CA 94022

Landscape Architect:
Ron Lutsko Jr. and Emily Peterson
Lutsko Associates *Landscape*
3295 Mission Street
San Francisco, CA 94110
phone #415-920-2800

Architect:
Eric Peterson
Pacific Peninsula Group
718 Oak Grove Avenue
Menlo Park, CA 94025
phone # 650-323-7900

Civil Engineer:
Vergel Galura
Mac Leod & Associates
965 Center Street
San Carlos, CA 94070
phone # 650-593-8580

Structural Engineer:
Pacific Peninsula Group
718 Oak Grove Avenue
Menlo Park, CA 94025
phone # 650-323-7900

Sheet Index

L0.0	Title Sheet
L1.1	Site Plan
L5.4	Fence Detail 1
L7.1	Irrigation Plan
L7.2	Irrigation Notes and Legend
L7.3	Irrigation Detail
L7.4	Irrigation Detail
L7.5	Irrigation Worksheet
L8.1	Lighting Diagram
L8.2	Lighting Fixtures
C-1	Survey
C-2	Grading and Drainage Plan
C-3	Erosion and Sedimentation Control Plan
C-4	Civil Details
C-5	Civil Details and Notes

Project Data

A.P.N.:
175-26-013

Lot Area:
43,929 sf (Gross)
.972 acres (Net)

List of Standard Abbreviations

BLDG:	Building
BW:	Bottom of Wall
BS:	Bottom of Stair
CB:	Catch Basin
CJ:	Control Joint
CL:	Centerline
CLR:	Clear
CMU:	Concrete Masonry Unit
CONC:	Concrete
DEMO:	Demolition
DIAM:	Diameter
DIM:	Dimension
DTL:	Detail
DWGS:	Drawings
DS:	Downspout
EA:	Each
EJ:	Expansion Joint
EQ:	Equal
EQUIP:	Equipment
(E):	Existing
FFE:	Finish Floor Elevation
FG:	Finish Grade
FS:	Finish Surface
FT:	Foot, Feet
HB:	Hose Bib
LA:	Landscape Architect
MAX:	Maximum
MFR:	Manufacture, Manufacturer
MIN:	Minimum
MISC:	Miscellaneous
(N):	New
NIC:	Not In Contract
NTS:	Not To Scale
OC:	On Center
PA:	Planting Area
PGR:	Per Geotechnical Report
PL:	Property Line
QTY:	Quantity
R:	Radius
SAD:	See Architect's Drawings
SCD:	See Civil Engineer's Drawings
SSD:	See Structural Engineer's Drawings
M/F SCHED:	Materials and Finishes Schedule
SIM:	Similar
SF:	Square Foot
SPEC, SPECS:	Specification, Specifications
TC:	Top of Curb
TS:	Top of Stair
TW:	Top of Wall
TYP:	Typical
W/:	With
W/O:	Without
WWM:	Welded Wire mesh

Location Map

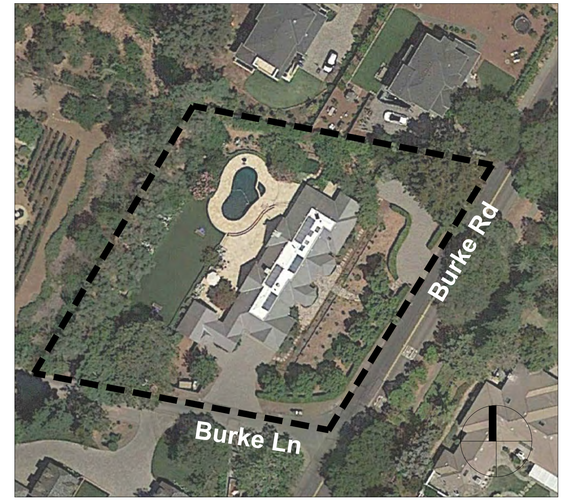

Abbreviations and Symbols:

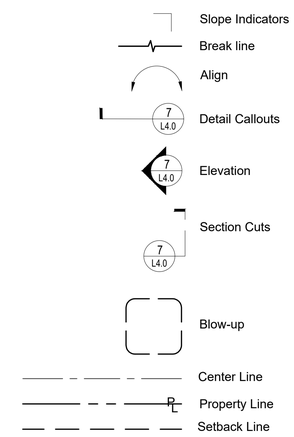

LUTSKO ASSOCIATES
landscape
3295 Mission Street
San Francisco, CA 94110-2002
t: 415.920.2800

Consultant:

Stamp:

Project Name:
Burke Road

13505 Burke Road
Los Altos Hills, CA

Sheet Title:
Title Sheet

Submittal:	Date:
100% DD Set	11-22-19
50% CD Set	03-30-20
Screening Submittal	05-18-20

Revision:	Date:
1 Per Town Comments	08-06-20

scale: as noted

sheet: L0.0

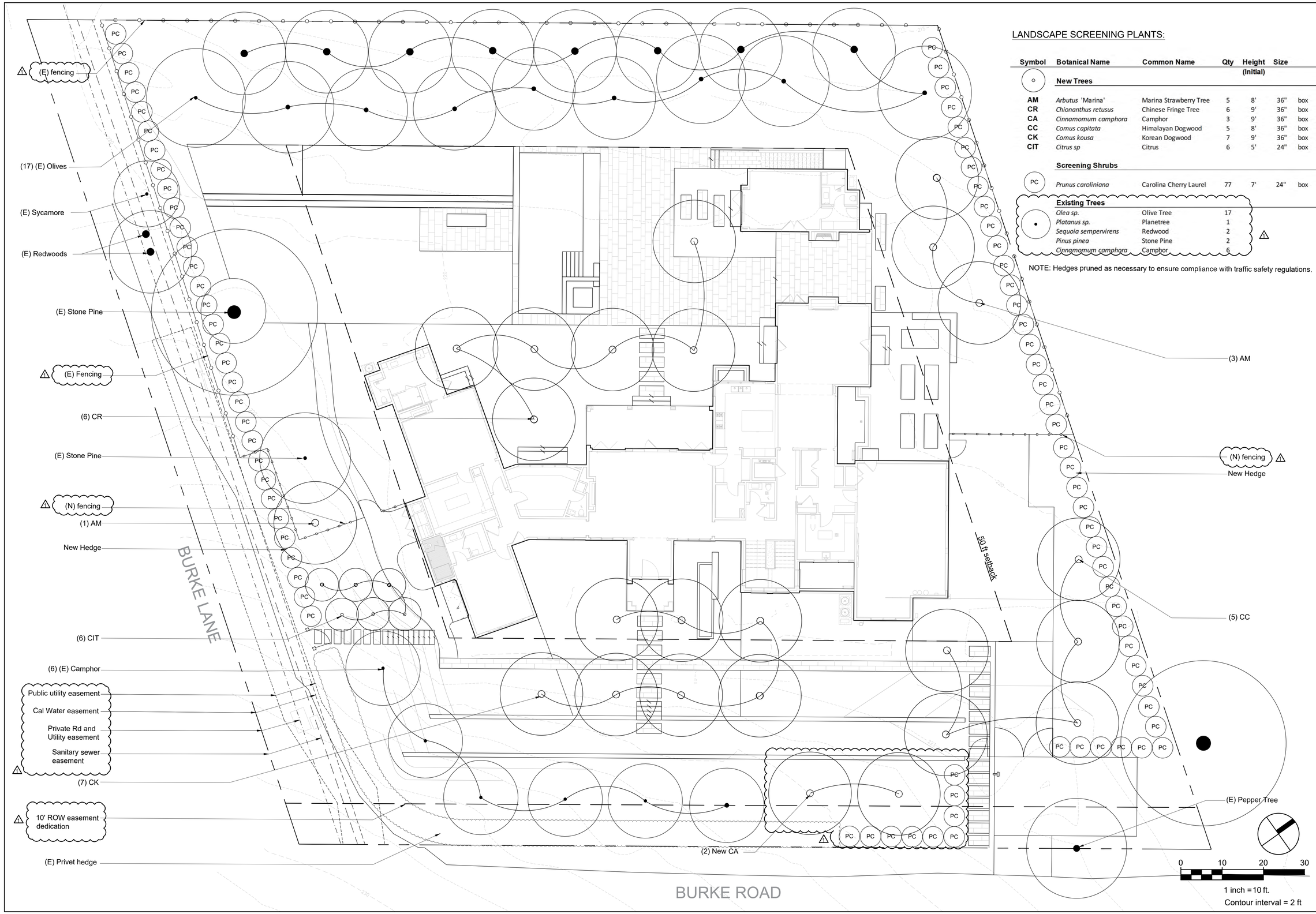

LANDSCAPE SCREENING PLANTS:

Symbol	Botanical Name	Common Name	Qty	Height (Initial)	Size	
	New Trees					
AM	*Arbutus* 'Marina'	Marina Strawberry Tree	5	8'	36"	box
CR	*Chionanthus retusus*	Chinese Fringe Tree	6	9'	36"	box
CA	*Cinnamomum camphora*	Camphor	3	9'	36"	box
CC	*Cornus capitata*	Himalayan Dogwood	5	8'	36"	box
CK	*Cornus kousa*	Korean Dogwood	7	9'	36"	box
CIT	*Citrus sp*	Citrus	6	5'	24"	box
	Screening Shrubs					
PC	*Prunus caroliniana*	Carolina Cherry Laurel	77	7'	24"	box
	Existing Trees					
	Olea sp.	Olive Tree	17			
	Platanus sp.	Planetree	1			
	Sequoia sempervirens	Redwood	2			
	Pinus pinea	Stone Pine	2			
	Cinnamomum camphora	Camphor	6			

NOTE: Hedges pruned as necessary to ensure compliance with traffic safety regulations.

LUTSKO ASSOCIATES
landscape

3295 Mission Street
San Francisco, CA 94110-2002
t: 415.920.2800

Consultant:

Stamp:

LICENSED LANDSCAPE ARCHITECT
Jon Bruno, JR. LIC. No. 2590
09-30-20
05-18-20
STATE OF CALIFORNIA

Project Name:

Burke Road

13505 Burke Road
Los Altos Hills, CA

Sheet Title:

Landscape Screening Plan

Submittal:	Date:
100% DD Set	11-22-19
50% CD Set	03-30-20
Screening Submittal	05-18-20

Revision:	Date:
1 Per Town Comments	08-06-20

scale: as noted

sheet: L1.1

NOT FOR CONSTRUCTION

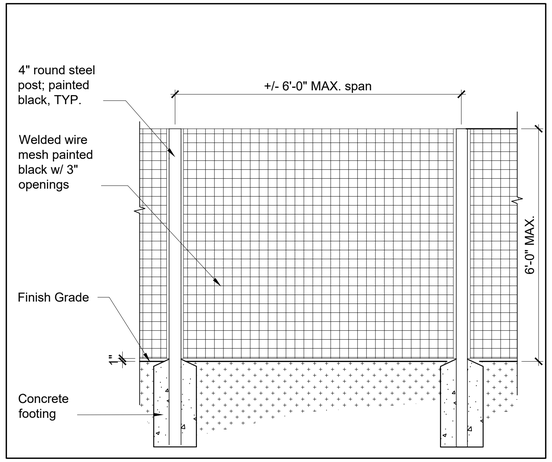

1 FENCE AT SIDE YARD

SCALE: 1/2" = 1'-0"

LUTSKO ASSOCIATES
landscape

3295 Mission Street
San Francisco, CA 94110-2002
t: 415.920.2800

Consultant:

Stamp:

Project Name:

Burke Road

13505 Burke Road
Los Altos Hills, CA

Sheet Title:

Fencing Details

Submittal:	Date:
100% DD Set	11-22-19
50% CD Set	03-30-20
Screening Submittal	05-18-20

Revision:	Date:
1 Per Town Comments	08-06-20

scale: as noted

1 sheet: L5.4

NOT FOR CONSTRUCTION

"I HAVE COMPLIED WITH THE CRITERIA OF THE MODEL WATER EFFICIENT LANDSCAPE ORDIANCE AND HAVE APPLIED THEM FOR THE EFFICIENT USE OF WATER IN THE IRRIGATION DESIGN PLAN."

JANET S. LUEHRS
Certified Irrigation Designer
CID
43274

BROOKWATER
IRRIGATION CONSULTANTS
480 ST. JOHN STREET, SUITE 220
PLEASANTON, CALIFORNIA 94566
TEL 925.855.0417 FAX 925.855.0357
E-MAIL JANET@BROOKWATER.COM

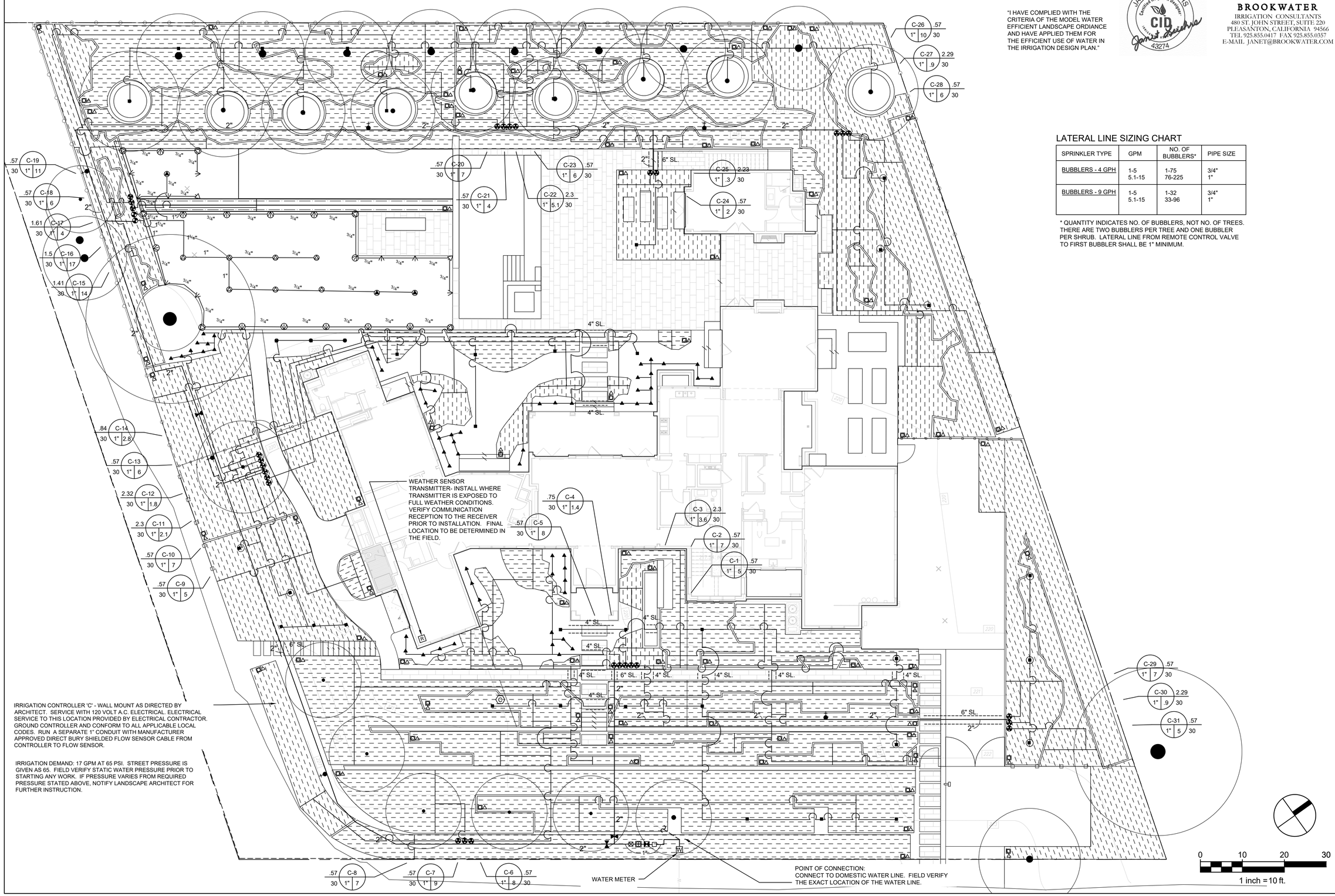

LATERAL LINE SIZING CHART

SPRINKLER TYPE	GPM	NO. OF BUBBLERS*	PIPE SIZE
BUBBLERS - 4 GPH	1-5 5.1-15	1-75 76-225	3/4" 1"
BUBBLERS - 9 GPH	1-5 5.1-15	1-32 33-96	3/4" 1"

* QUANTITY INDICATES NO. OF BUBBLERS, NOT NO. OF TREES. THERE ARE TWO BUBBLERS PER TREE AND ONE BUBBLER PER SHRUB. LATERAL LINE FROM REMOTE CONTROL VALVE TO FIRST BUBBLER SHALL BE 1" MINIMUM.

LUTSKO ASSOCIATES
landscape

3295 Mission Street
San Francisco, CA 94110-2002
t: 415.920.2600

Consultant:

Stamp:

Project Name:

Burke Road

13505 Burke Road
Los Altos Hills, CA

Sheet Title:

Irrigation Plan

Submittal:	Date:
Planning Set	07-18-19
100% DD Set	11-22-19
50% CD Set	03-30-20
Screening Submittal	05-18-20

Revision:	Date:
1 Per Town Comments	08-06-20

scale: as noted

sheet: L7.1

IRRIGATION NOTES

1. THE CONTRACTOR SHALL REVIEW RELATED DRAWINGS AND SHALL ENSURE COORDINATION WITH ALL APPLICABLE TRADES PRIOR TO SUBMITTING BID.

2. THE IRRIGATION SYSTEM SHALL BE INSTALLED IN CONFORMANCE WITH ALL APPLICABLE STATE AND LOCAL CODES AND ORDINANCES BY LICENSED CONTRACTORS AND EXPERIENCED WORKERS. CONTRACTOR SHALL OBTAIN AND PAY FOR ALL REQUIRED PERMITS AND FEES RELATING TO THEIR WORK.

3. THIS DESIGN IS DIAGRAMMATIC. ALL PIPING, VALVES, ETC. SHOWN WITHIN PAVED AREAS IS FOR DESIGN CLARIFICATION ONLY AND SHALL BE INSTALLED IN PLANTING AREAS WHERE POSSIBLE. AVOID ANY CONFLICTS BETWEEN THE SPRINKLER SYSTEM, PLANTING AND ARCHITECTURAL FEATURES.

4. PARALLEL PIPES MAY BE INSTALLED IN COMMON TRENCH. PIPES ARE NOT TO BE INSTALLED DIRECTLY ABOVE ONE ANOTHER. TRENCHES SHALL BE AMPLE SIZE TO PERMIT THE PIPES TO BE LAID AT THE ELEVATIONS INTENDED AND TO PERMIT SPACE FOR JOINING.

5. CONTRACTOR SHALL RESTORE SURFACES, EXISTING UNDERGROUND INSTALLATIONS, ETC., DAMAGED OR CUT AS A RESULT OF EXCAVATIONS, TO ORIGINAL CONDITIONS IN A MANNER APPROVED BY THE OWNER'S REPRESENTATIVE.

6. DO NOT WILLFULLY INSTALL THE SPRINKLER SYSTEM AS SHOWN ON THE DRAWINGS WHEN IT IS OBVIOUS IN THE FIELD THAT OBSTRUCTIONS, GRADE DIFFERENCES OR DIFFERENCES IN THE AREA DIMENSIONS EXIST THAT MIGHT NOT HAVE BEEN CONSIDERED IN THE ENGINEERING. SUCH OBSTRUCTIONS OR DIFFERENCES SHOULD BE BROUGHT TO THE ATTENTION OF THE OWNER'S AUTHORIZED REPRESENTATIVE. IN THE EVENT THAT THIS NOTIFICATION IS NOT PERFORMED, THE CONTRACTOR SHALL ASSUME FULL RESPONSIBILITY FOR ANY REVISIONS NECESSARY.

7. IT IS THE RESPONSIBILITY OF THE CONTRACTOR TO BECOME FAMILIAR WITH ALL GRADE DIFFERENCES, LOCATION OF WALLS, RETAINING WALLS, ETC. COORDINATE WORK WITH THE GENERAL CONTRACTOR AND OTHER SUBCONTRACTORS FOR THE LOCATION AND THE INSTALLATION OF PIPE SLEEVES THROUGH WALLS, UNDER ROADWAYS, PAVING, STRUCTURES, ETC. CONTRACTOR TO VERIFY THE LOCATION OF EXISTING UNDERGROUND UTILITIES AND STRUCTURES PRIOR TO THE EXCAVATION OF TRENCHES. CONTRACTOR IS TO REPAIR ANY DAMAGE CAUSED BY THEIR WORK AT NO ADDITIONAL COST TO THE OWNER.

8. DUE TO THE SCALE OF THE DRAWINGS, IT IS NOT POSSIBLE TO INDICATE ALL OFFSETS, FITTINGS, SLEEVES, ETC., WHICH MAY BE REQUIRED. CAREFULLY INVESTIGATE THE STRUCTURAL AND FINISHED CONDITIONS AFFECTING ALL WORK AND PLAN WORK ACCORDINGLY, FURNISHING SUCH FITTINGS, ETC., AS MAY BE REQUIRED TO MEET SUCH CONDITIONS. DRAWINGS ARE GENERALLY DIAGRAMMATIC AND INDICATIVE OF THE WORK TO BE INSTALLED. THE WORK SHALL BE INSTALLED IN SUCH A MANNER AS TO AVOID CONFLICTS BETWEEN IRRIGATION SYSTEMS, PLANTING, AND ARCHITECTURAL FEATURES.

9. ELECTRICAL CONTRACTOR TO SUPPLY 120 VAC (2.5 AMP) SERVICE TO CONTROLLER LOCATION. IRRIGATION CONTRACTOR TO MAKE FINAL CONNECTION FROM ELECTRICAL STUB-OUT TO CONTROLLER. IRRIGATION CONTROL WIRE SHALL BE #14, U.L. APPROVED FOR DIRECT BURIAL. COMMON WIRE SHALL BE #12 U.L. APPROVED AND SHALL BE WHITE IN COLOR. WIRING TO INDIVIDUAL REMOTE CONTROL VALVES SHALL BE COLOR OTHER THAN WHITE.

10. REMOTE CONTROL VALVES SHALL BE WIRED TO CONTROLLER IN SEQUENCE AS SHOWN ON PLANS. RUN WIRE FROM EACH RCV TO THE CONTROLLER. SPLICING WIRES TOGETHER OUTSIDE OF VALVE BOXES WILL NOT BE PERMITTED. ATTACH A LABEL TO CONTROL WIRE AT THE CONTROLLER AND ATTACH AN ID TAG AT EACH REMOTE CONTROL VALVE INDICATING CONTROLLER AND STATION NUMBER.

11. SPLICING OF 24-VOLT WIRES WILL NOT BE PERMITTED EXCEPT IN VALVE BOXES. LEAVE A 36" COIL OF EXCESS WIRE AT EACH SPLICE AND 100 FEET ON CENTER ALONG WIRE RUN. TAPE WIRE IN BUNDLES 10 FEET ON CENTER. NO TAPING PERMITTED INSIDE SLEEVES.

12. WIRE CONNECTORS SHALL BE 3M-DBR/Y-6 DIRECT BURY UNLESS OTHERWISE NOTED.

13. INSTALL ONE (1) SPARE CONTROL WIRE FOR EVERY 6 (SIX) STATIONS ON THE CONTROLLER ALONG THE ENTIRE MAIN LINE. SPARE WIRES SHALL BE THE SAME COLOR (ONE WITH A WHITE STRIPE) AND OF A DIFFERENT COLOR THAN OTHER CONTROL WIRES. LOOP 36" EXCESS WIRE INTO EACH SINGLE VALVE BOX AND INTO ONE VALVE BOX IN EACH GROUP OF VALVES.

14. VALVE LOCATIONS SHOWN ARE DIAGRAMMATIC. INSTALL IN GROUND COVER/SHRUB AREAS WHERE POSSIBLE (NOT IN LAWN AREA.)

15. INSTALL VALVE BOXES MINIMUM 12" FROM AND PERPENDICULAR TO WALK, CURB, LAWN, BUILDING OR LANDSCAPE FEATURE. AT MULTIPLE VALVE BOX GROUPS, EACH BOX SHALL BE AN EQUAL DISTANCE FROM THE WALK, CURB, LAWN, ETC. AND EACH BOX SHALL BE MINIMUM 12" APART. SHORT SIDE OF VALVE BOXES SHALL BE PARALLEL TO WALK, CURB, LAWN, ETC.

16. THOROUGHLY FLUSH MAIN LINE BEFORE INSTALLING VALVES.

17. ALL SPRINKLER HEADS SHALL BE SET PERPENDICULAR TO FINISH GRADE OF THE AREA TO BE IRRIGATED UNLESS OTHERWISE DESIGNATED ON THE PLANS.

18. IN LOCATIONS WHERE LOW HEAD DRAINAGE WILL CAUSE EROSION AND EXCESS WATER, USE POP-UP SPRINKLER MODELS WITH INTEGRAL CHECK VALVE OR A KING BROS. CV SERIES CHECK VALVE ON SHRUB RISERS IN LIEU OF SCHEDULE 80 COUPLING. FOR DRIP OR BUBBLER CIRCUITS, INSTALL KING BROS. CV SERIES CHECK VALVES IN LATERAL LINES FOR EVERY 10' OF ELEVATION CHANGE.

19. FLUSH AND ADJUST ALL SPRINKLER HEADS FOR OPTIMUM PERFORMANCE AND TO PREVENT OVERSPRAY ONTO WALKS, ROADWAYS AND/OR BUILDINGS AS MUCH AS POSSIBLE. THIS SHALL INCLUDE SELECTING THE BEST DEGREE OF FIXED ARC (OR AN ADJUSTABLE ARC IF FIXED ARC DOES NOT MATCH THE ARC TO BE IRRIGATED) TO FIT THE SITE CONDITIONS AND TO THROTTLE THE FLOW CONTROL AT EACH VALVE TO OBTAIN THE OPTIMUM OPERATING PRESSURE FOR EACH SYSTEM. ALL MAIN LINES SHALL BE FLUSHED PRIOR TO THE INSTALLATION OF IRRIGATION HEADS. AT 30 DAYS AFTER INSTALLATION EACH SYSTEM SHALL BE FLUSHED TO ELIMINATE GLUE AND DIRT PARTICLES FROM THE LINES.

20. WHEN VERTICAL OBSTRUCTIONS (STREET LIGHTS, TREES, FIRE HYDRANTS, ETC.) INTERFERE WITH THE SPRAY PATTERN OF THE HEADS SO AS TO PREVENT PROPER COVERAGE, FIELD ADJUST THE SPRINKLER SYSTEM BY INSTALLING A QUARTER, THIRD OR HALF CIRCLE HEAD AT THE SIDES OF THE OBSTRUCTION SO AS TO PROVIDE PROPER COVERAGE. ALL ADJUSTMENTS SHALL BE MADE AT NO ADDITIONAL COST TO THE OWNER.

21. NOTIFY ARCHITECT OF ANY ASPECTS OF LAYOUT THAT WILL PROVIDE INCOMPLETE OR INSUFFICIENT WATER COVERAGE OF PLANT MATERIAL AND DO NOT PROCEED UNTIL HIS/HER INSTRUCTIONS ARE OBTAINED.

22. LOCATE BUBBLERS ON UPHILL SIDE OF TREES. TREE BUBBLERS ARE FOR ESTABLISHMENT AND DROUGHT CONDITIONS. THEY ARE TO BE TURNED OFF AFTER TREES ARE ESTABLISHED AND TURNED ON DURING DROUGHT CONDITIONS.

23. IN ADDITION TO THE SLEEVES AND CONDUITS SHOWN ON THE DRAWINGS, THE IRRIGATION CONTRACTOR SHALL BE RESPONSIBLE FOR COORDINATING THE INSTALLATION OF SLEEVES AND CONDUITS OF SUFFICIENT SIZE UNDER ALL PAVED AREAS.

24. ALL EXCAVATIONS ARE TO BE FILLED WITH COMPACTED BACKFILL. BACKFILL MATERIAL SHALL BE THE EARTH EXCAVATED FROM THE TRENCH AND FREE OF ROCKS AND OTHER FOREIGN COURSE MATERIAL. COMPACT BACKFULL TO A MINIMUM OF 90 PERCENT OF ORIGINAL SOIL DENSITY. REPAIR ALL SETTLED TRENCHES PROMPTLY, FOR A PERIOD OF 1 YEAR AFTER COMPLETION OF WORK.

25. CONTRACTOR SHALL WARRANT THAT THE IRRIGATION SYSTEM WILL BE FREE FROM DEFECTS IN MATERIALS AND WORKMANSHIP FOR A PERIOD OF 1 YEAR AFTER FINAL ACCEPTANCE OF WORK.

26. ALL CONSTANT PRESSURE PIPES SHALL BE TESTED AT A MINIMUM OF 125 PSI FOR TWO HOURS. CENTER LOAD PIPING WITH A SMALL AMOUNT OF BACKFILL TO PREVENT ARCHING OR SLIPPING UNDER PRESSURE. NO FITTINGS SHALL BE COVERED. REPAIR FAULTY JOINTS WITH NEW MATERIALS. DO NOT USE CEMENT OR CAULKING TO REPAIR LEAKS.

27. WHERE IT IS NECESSARY TO EXCAVATE ADJACENT TO EXISTING TREES, USE ALL POSSIBLE CARE TO AVOID INJURY TO TREES, AND TREE ROOTS. EXCAVATION IN AREAS WHERE 2 INCH AND LARGER ROOTS OCCUR SHALL BE DONE BY HAND. ROOTS 2 INCHES AND LARGER IN DIAMETER SHALL BE WRAPPED IN A PLASTIC BAG AND SECURED WITH A RUBBER BAND. TRENCHES ADJACENT TO TREE SHOULD BE CLOSED WITHIN 24 HOURS; WHERE THIS IS NOT POSSIBLE, THE SIDE OF THE TRENCH ADJACENT TO THE TREE SHALL BE KEPT SHADED WITH BURLAP OR CANVAS.

28. THE SPRINKLER SYSTEM DESIGN IS BASED ON THE MINIMUM OPERATING PRESSURE SHOWN ON THE IRRIGATION DRAWINGS. VERIFY WATER PRESSURE PRIOR TO CONSTRUCTION. REPORT ANY DIFFERENCE BETWEEN THE WATER PRESSURE INDICATED ON THE DRAWINGS AND THE ACTUAL PRESSURE READING AT THE IRRIGATION POINT OF CONNECTION TO THE OWNER'S AUTHORIZED REPRESENTATIVE.

29. IRRIGATION DEMAND: REFER TO IRRIGATION POINTS OF CONNECTION.

30. OPERATE IRRIGATION CONTROLLER(S) BETWEEN THE HOURS OF 10:00 PM AND 7:00 AM.

31. INSTALL FILTERATION UNIT PRIOR TO ORDERING ENCLOSURE. ORDER ENCLOSURE WITH APPROPRIATE INSIDE DIMENSIONS TO HOUSE INSTALLED FILTRATION UNIT.

32. NOTIFY ALL LOCAL JURISDICTIONS FOR INSPECTION AND TESTING OF INSTALLED BACKFLOW PREVENTION DEVICE.

33. NOTIFY UNDERGROUND SERVICE ALERT AT 811 AT LEAST 48 HOURS PRIOR TO ANY EXCAVATION.

34. AT LEAST 10 DAYS PRIOR TO COMPLETION OF CONSTRUCTION, PROVIDE THE OWNER WITH A MAINTENANCE MANUAL. DATA SHALL BE ON 8 1/2" X 11" SHEETS, IN A 3-RING BINDER AND SHALL INCLUDE:
    - INDEX SHEET WITH CONTRACTOR'S CONTACT INFORMATION AND LIST OF EQUIPMENT WITH LOCAL MANUFACTURER'S REPRESENTATIVES.
    - CATALOG AND PARTS SHEET OF ALL MATERIAL AND EQUIPMENT.
    - COMPLETE OPERATING AND MAINTENANCE INSTRUCTIONS FOR ALL EQUIPMENT.
    - COMPLETE AND DATED MANUFACTURER'S WARRANTIES.

35. AT COMPLETION OF MAINTENANCE PERIOD, PROVIDE OWNER WITH THREE (3) EACH OF ALL OPERATING AND SERVICING KEYS AND WRENCHES REQUIRED FOR COMPLETE MAINTENANCE AND OPERATION OF ALL HEADS AND VALVES. PROVIDE TWO (2) EACH OF KEYS AND HOSE SWIVELS FOR QUICK COUPLERS AND KEYS TO CONTROLLER CABINETS AND/OR ENCLOSURES.

"I HAVE COMPLIED WITH THE CRITERIA OF THE MODEL WATER EFFICIENT LANDSCAPE ORDIANCE AND HAVE APPLIED THEM FOR THE EFFICIENT USE OF WATER IN THE IRRIGATION DESIGN PLAN."

JANET S. LUEHRS
Certified Irrigation Designer
CID
43274

BROOKWATER
IRRIGATION CONSULTANTS
480 ST. JOHN STREET, SUITE 220
PLEASANTON, CALIFORNIA 94566
TEL 925.855.0417 FAX 925.855.0357
E-MAIL JANET@BROOKWATER.COM

IRRIGATION LEGEND

SYMBOL	MODEL NUMBER	DESCRIPTION	PSI	FLOW RATE (GPM)	MAX. RADIUS	MAX. SPACING	DETAIL #
	570Z-6P-PRX-COM-O-T-10F,H,Q	TORO POP-UP LAWN SPRAY	30	1.03,.51,.23	10'	9'	L7.4/18
	570Z-6P-PRX-COM-O-T-12F,H,Q	TORO POP-UP LAWN SPRAY	30	1.48,.74,.37	12'	11'	L7.4/18
▲	DB-04-PC-CV	TORO PRESSURE COMPENSATING DRIP BUBBLER INSTALL ONE BUBBLER PER SHRUB	40	4 GPH	-	-	L7.3/9
■	DB-09-PC-CV	TORO PRESSURE COMPENSATING DRIP BUBBLER INSTALL TWO BUBBLERS PER TREE	40	9 GPH	-	-	L7.3/8
△	EBV-0500-S	NDS 1/2" BALL VALVE FOR FLUSHING					L7.3/12
NOT SHOWN	T-YD-500-34	TORO DL2000 AIR VENT					L7.4/13
	570Z-6P-SI-5Q	TORO POP-UP SPRAY OPERATION INDICATOR W/ MPR 5' NOZZLE ADJUSTED TO NO FLOW					L7.4/14
	700-OMR-100 SERIES/LT-T SERIES	IRRITROL REMOTE CONTROL VALVE WITH PRESSURE REGULATION / KBI PVC BALL VALVE					L7.3/11
	DZK-700 / LT-1000-T	TORO DRIP ZONE VALVE KIT - INCL. REMOTE CONTROL VALVE, WYE FILTER WITH 150 MESH SCREEN, AND PRESET PRESSURE REGULATOR / NDS SCH 80 PVC BALL VALVE					L7.3/10
	T-113-LF	NIBCO LEAD FREE GATE VALVE (LINE SIZE)					L7.3/6
	FSI-T10-000	CST 1" FLOW SENSOR					L7.3/2
	2160-H	GRISWOLD 1" MASTER CONTROL VALVE (NORMALLY OPEN)					L7.3/1
	975XL2-1"	WILKINS LEAD-FREE REDUCED PRESSURE BACKFLOW PREVENTER					L7.4/17
	MODEL 70	BADGER 1" WATER METER (SUB-METER FOR IRRIGATION)					L7.4/16
R	CL-100-WIRELESS	IRRITROL CLIMATE LOGIC WIRELESS WEATHER SENSOR					L7.3/7
	216	ARROW HEAD-CHAMPION HOSE BIB W/ INTEGRAL VACUUM BREAKER					L7.4/19
C	MC-36E PROMAX-UA	IRRITROL 36 STATION MC-E CONTROLLER - WALL MOUNT (CONNECT MASTER VALVE TO STATION 1) PRO MAX UNIVERSAL MAINTENANCE REMOTE KIT					L7.4/15
C-1 / 1" / 15 / 1.6 / 30		CONTROLLER AND STATION NUMBER APPLICATION RATE (INCHES) OPERATING PRESSURE (PSI) APPROXIMATE GALLONS PER MINUTE REMOTE CONTROL VALVE SIZE					
		MAIN LINE: 1120-SCHEDULE 40 PVC SOLVENT WELD PLASTIC PIPE WITH SCHEDULE 80 AND SCHEDULE 40 PVC SOLVENT WELD FITTINGS. 18" COVER.					L7.3/4
		LATERAL LINE: 1120-CLASS 200 PSI PVC SOLVENT WELD PIPE WITH SCHEDULE 40 PVC SOLVENT WELD FITTINGS. 12" COVER.					L7.3/4
		SUB-SURFACE DRIPLINE: TORO DL2000 RGP-212-10 DRIPLINE WITH ROOT GUARD. USE ONLY DL2000 DRIPLINE TRI-LOC FITTINGS. 2" COVER. (12" EMITTER SPACING; .53 GPH PER EMITTER)					L7.4/20-25
		SUB-SURFACE DRIPLINE: TORO DL2000 RGP-412-10 DRIPLINE WITH ROOT GUARD. USE ONLY DL2000 DRIPLINE TRI-LOC FITTINGS. 2" COVER. (12" EMITTER SPACING; 1.0 GPH PER EMITTER)					L7.4/20-25
		SLEEVE (SL): 1120-CLASS 200 PVC PLASTIC PIPE. 24" COVER.					L7.3/4

DRIPLINE NOTES:

1. PLANS ARE DIAGRAMMATIC. INSTALL DRIPLINE AND COMPONENTS PER MANUFACTURERS INSTRUCTIONS AND INSTALLATION DETAILS.

2. INSTALL DRIPLINE A MAXIMUM OF 18" APART (12" IN TURF AREAS) WITH EMITTERS TRIANGULARLY SPACED. INSTALL 2" FROM PERIMETER OF PLANTED AREA. THERE SHOULD BE A MINIMUM OF TWO DRIPLINE LATERALS IN EACH PLANTED AREA. DRIPLINE SHALL BE INSTALLED AT A CONSISTANT DEPTH THROUGHOUT THE CIRCUIT.

3. PLACE AIR/VACUUM RELIEF VALVES AT THE HIGHEST POINTS OF EACH ZONE AND JUST BELOW CHECK VALVES ON SLOPES. INSTALL ONE AIR/VACUUM RELIEF VALVE FOR EVERY 750' OF TOTAL DRIPLINE PER ZONE.

4. PLACE FLUSH VALVES AT THE HYDRAULIC CENTER OF THE EXHAUST HEADER OR AT LOW POINT ON SLOPES. INSTALL MINIMUM OF ONE FOR EVERY 15 GPM.

5. INSTALL IN-LINE CHECK VALVES ON SLOPES GREATER THAN 3% AND WHERE LOW-LINE DRAINAGE COULD CAUSE WET AREAS IN THE LOWEST AREAS OF AN IRRIGATION ZONE. CHECK VALVES SHALL BE PLACED EVERY 4-5 FEET BETWEEN DRIPLINE LATERALS AND BEFORE THE FLUSH VALVE.

6. ON ALL SLOPES AND MOUNDS, PLACE THE DRIPLINE LATERALS PARALLEL TO THE SLOPE CONTOUR WHERE POSSIBLE. INCREASE THE LATERAL SPACING BY 25% ON THE LOWER ONE-THIRD OF THE SLOPE TO AVOID EXCESS DRAINAGE.

7. PVC SUPPLY AND FLUSH LINE SIZING GUIDE (ALL SUPPLY AND FLUSH LINES SHALL BE THE SAME SIZE FOR THE ENTIRE ZONE):
    - 0-8 GPM - 3/4"
    - 8.1-15 GPM - 1"
    - 15.1-25 GPM - 1 1/4"

8. FITTINGS SHALL BE OF THE SAME MANUFACTURER AS DRIPLINE..

9. THOROUGHLY FLUSH EACH INSTALLATION SEGMENT TO ENSURE NO DEBRIS CONTAMINATION OCCURS.

10. IN TURF OR NOW-MOW GRASS AREAS, A TEMPORARY OVERHEAD SPRAY SYSTEM WILL NEED TO BE PROVIDED UNTIL THE TURF SEED OR SOD IS ESTABLISHED. OVERHEAD WATERING CAN BE DISCONTINUED WHEN EDGES OF THE SOD CANNOT BE PULLED UP. RUN THE DRIPLINE SYSTEM SEVERAL TIMES DAILY IN ADDITION TO THE TEMPORARY OVERHEAD SYSTEM.

11. RUN THE DRIPLINE SYSTEM EVERY DAY OR EVERY OTHER DAY TO ESTABLISH PLANT MATERIAL. MAINTAIN A CONSISTENT MOISTURE BALANCE IN THE SOIL. IT IS IMPORTANT TO KEEP THE SOIL MOIST WITHOUT SATURATION.

LUTSKO ASSOCIATES
landscape
3295 Mission Street
San Francisco, CA 94110-2002
t: 415.920.2600

Consultant:

Stamp:

Project Name:
Burke Road

13505 Burke Road
Los Altos Hills, CA

Sheet Title:
Irrigation Note & Legend

Submittal:	Date:
Planning Set	07-18-19
100% DD Set	11-22-19
50% CD Set	03-30-20
Screening Submittal	05-18-20

Revision:	Date:
1 Per Town Comments	08-06-20

scale: as noted

sheet: L7.2

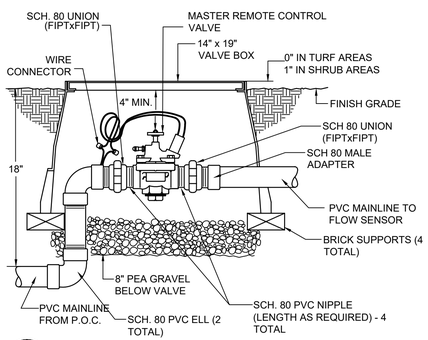

1 MASTER REMOTE CONTROL VALVE

NOT TO SCALE

NOTE: FLOW SENSOR MUST BE INSTALLED WITH INSERT (TOP) VERTICAL AND BODY (TEE) POSITIONED HORIZONTALLY.

#18 GAUGE DIRECT BURIAL SENSOR CABLE, PROVIDE 36" EXTRA CABLE. (MUST BE RUN IN 1" CONDUIT FROM SENSOR TO CONTROLLER)

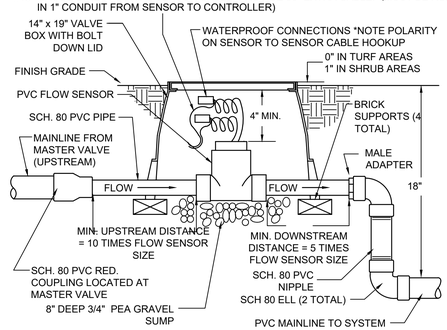

2 PVC FLOW SENSOR INSTALLATION DETAIL

NOT TO SCALE

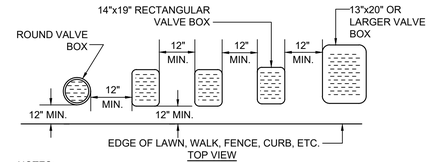

NOTES:

1. CENTER BOX OVER VALVE TO FACILITATE SERVICING VALVE.
2. SET BOXES 1" ABOVE FINISH GRADE OR MULCH COVER IN GROUND COVER/SHRUB AREA AND FLUSH WITH FINISH GRADE IN TURF AREA.
3. SET VALVE BOX ASSEMBLY IN GROUND COVER/SHRUB AREA WHERE POSSIBLE. INSTALL IN LAWN AREA ONLY IF GROUND COVER/SHRUB AREA DOES NOT EXIST ADJACENT TO LAWN.
4. SET BOXES PARALLEL TO EACH OTHER AND PERPENDICULAR TO EDGE.
5. AVOID HEAVILY COMPACTING SOIL AROUND VALVE BOX EDGES TO PREVENT COLLAPSE AND DEFORMATION OF VALVE BOX SIDES.
6. VALVE BOXES SHALL HAVE BOLT DOWN LIDS WITH BOLTS INSTALLED.
7. VALVE BOXES SHALL BE BY NDS, CARSON, OR EQUAL.

3 VALVE BOX INSTALLATION DETAIL

NOT TO SCALE

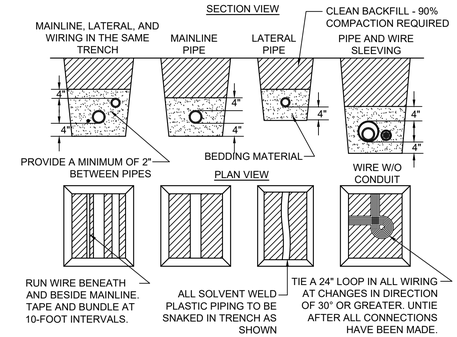

NOTES:

1. SLEEVE BELOW ALL HARDSCAPE ELEMENTS WITH SPECIFIED PVC PIPE TWICE THE DIAMETER OF THE PIPE OR WIRE BUNDLE WITHIN.
2. FOR PIPE AND WIRE BURIAL DEPTHS REFER TO IRRIGATION LEGEND AND SPECIFICATIONS.

4 PIPE AND WIRE TRENCHING

NOT TO SCALE

STEP 1: STRIP WIRES 1/2" FROM ENDS.

STEP 2: APPLY SCOTCHLOK Y SPRING CONNECTOR IN A CLOCKWISE DIRECTION.

STEP 3: INSERT SPLICE TO BOTTOM OF GEL-FILLED TUBE. CHECK TO MAKE SURE CONNECTOR HAS BEEN PUSHED PAST LOCKING FINGERS AND IS SEATED AT BOTTOM OF TUBE.

STEP 4: POSITION WIRES IN WIRE CHANNELS AND CLOSE INSULATOR TUBE COVER.

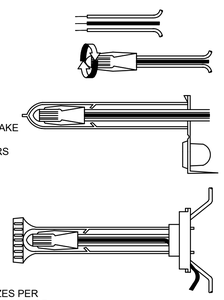

NOTE: MAXIMUM WIRE SIZES PER CONNECTOR ARE THREE # 14'S OR TWO #12'S.

5 WIRE CONNECTION DETAIL

NOT TO SCALE

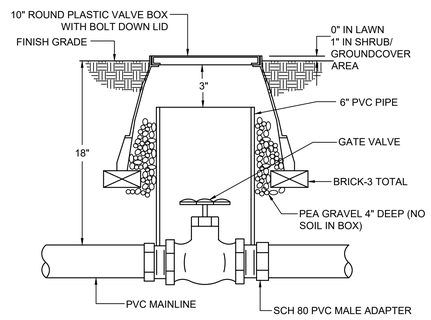

6 GATE VALVE DETAIL

NOT TO SCALE

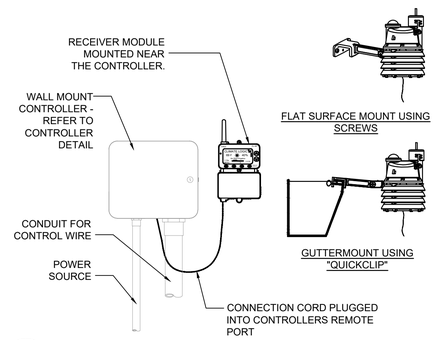

7 IRRITROL CLIMATE LOGIC WEATHER SENSOR

NOT TO SCALE

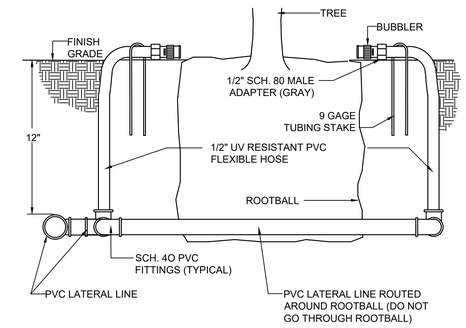

8 TREE BUBBLER DETAIL

NOT TO SCALE

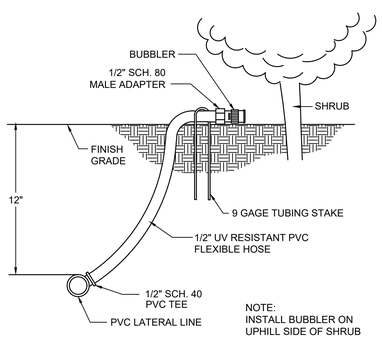

9 SHRUB BUBBLER ON FLEX HOSE DETAIL

NOT TO SCALE

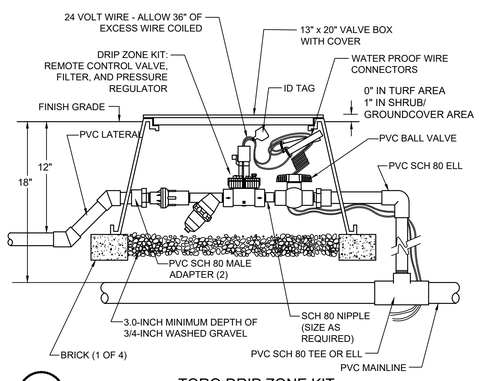

10 TORO DRIP ZONE KIT

NOT TO SCALE

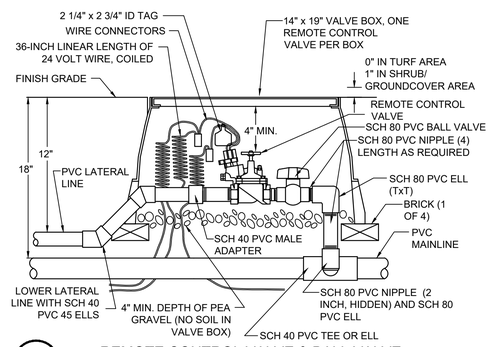

11 REMOTE CONTROL VALVE & BALL VALVE

NOT TO SCALE

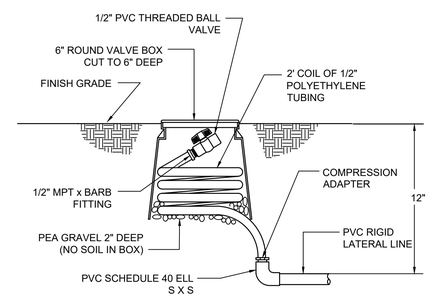

12 MANUAL FLUSH VALVE DETAIL

NOT TO SCALE

BROOKWATER
IRRIGATION CONSULTANTS
480 ST. JOHN STREET, SUITE 220
PLEASANTON, CALIFORNIA 94566
TEL 925.855.0417 FAX 925.855.0357
E-MAIL JANET@BROOKWATER.COM

"I HAVE COMPLIED WITH THE CRITERIA OF THE MODEL WATER EFFICIENT LANDSCAPE ORDIANCE AND HAVE APPLIED THEM FOR THE EFFICIENT USE OF WATER IN THE IRRIGATION DESIGN PLAN."

LUTSKO ASSOCIATES
landscape

3295 Mission Street
San Francisco, CA 94110-2002
t: 415.920.2600

Consultant:

Stamp:

Project Name:

Burke Road

13505 Burke Road
Los Altos Hills, CA

Sheet Title:

Irrigation Detail

Submittal:	Date:
Planning Set	07-18-19
100% DD Set	11-22-19
50% CD Set	03-30-20
Screening Submittal	05-18-20

Revision:	Date:
1 Per Town Comments	08-06-20

scale: as noted

sheet: L7.3

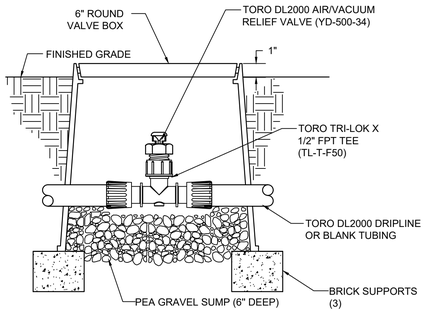

NOTE:
AIR/VACUUM RELIEF VALVE CANNOT BE CONNECTED LOWER THAN DRIPLINE LATERALS.

13 TORO DL2000 AIR/VACUUM RELIEF VALVE - PLUMBED TO TUBING

NOT TO SCALE

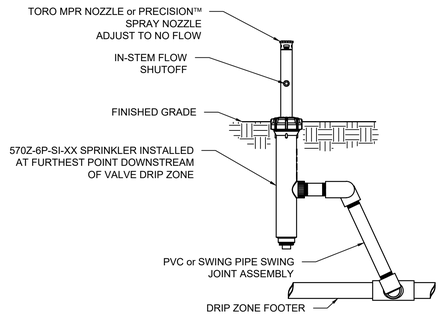

14 TORO 570Z POP-UP OPERATION INDICATOR

NOT TO SCALE

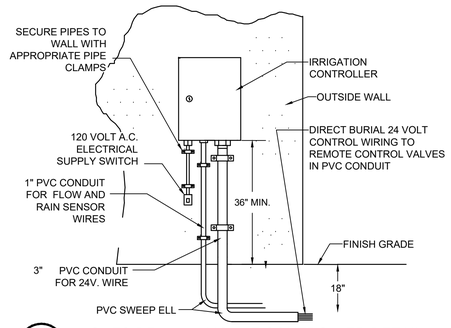

15 OUTSIDE WALL MOUNT CONTROLLER DETAIL

NOT TO SCALE

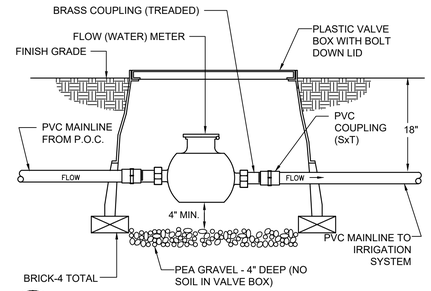

16 FLOW METER (SUB-METER)

NOT TO SCALE

NOTE: EVENLY COAT METAL FITTINGS EXPOSED TO SOIL AND CONCRETE WITH 3M SCOTCHRAP PIPE PRIMER AND THEN WRAP WITH 3M SCOTCHRAP NO. 51 BLACK TAPE (3/4" OVERLAP). USE DIELECTRIC FITTINGS WHERE DISSIMILAR METALS COME INTO CONTACT.

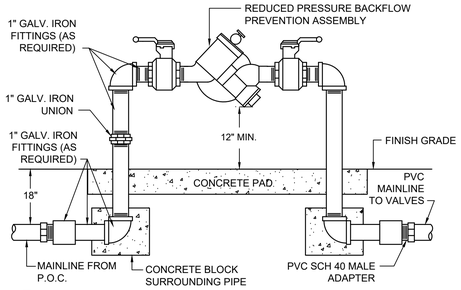

17 REDUCED PRESSURE BACKFLOW ASSEMBLY

NOT TO SCALE

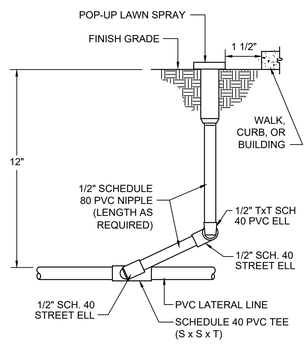

NOTE:
PRE-FABRICATED SWING JOINTS MAY BE USED. SWING JOINTS SHALL BE BY LASCO, RAINBIRD, OR EQUAL

18 LAWN POP-UP INSTALLATION DETAIL

NOT TO SCALE

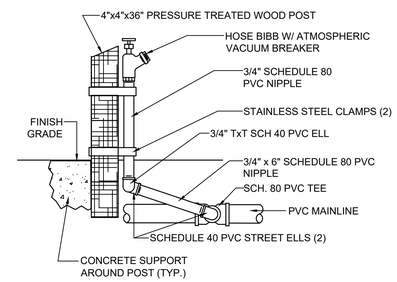

19 HOSE BIBB DETAIL

NOT TO SCALE

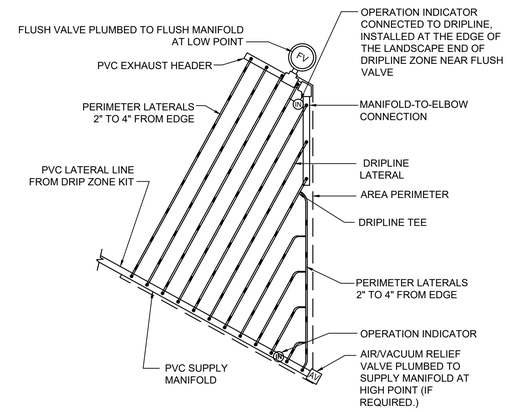

PLAN

20 TYPICAL ISLAND LAYOUT END FEED

NOT TO SCALE

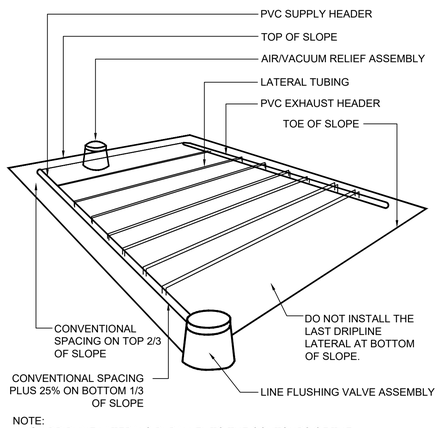

NOTE:
ALIGN DRIPLINE LATERALS PARALLEL TO THE CONTOURS OF THE SLOPE

21 INLINE DRIP SPACING LAYOUT ON SLOPE

NOT TO SCALE

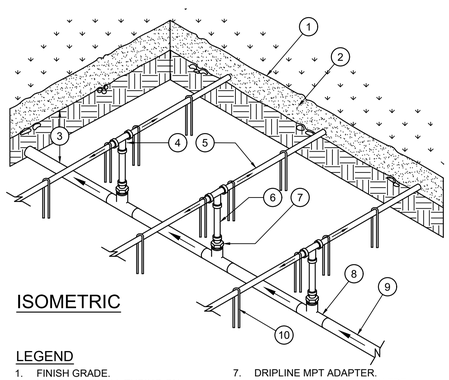

ISOMETRIC

LEGEND

1. FINISH GRADE.
2. MULCH - INSTALL TUBING ON GRADE, UNDER MULCH
3. DEPTH OF PVC SUPPLY MANIFOLD PER SPECIFICATIONS.
4. DRIPLINE TEE FITTING.
5. DRIPLINE LATERAL.
6. BLANK POLY TUBING, LENGTH AS NECESSARY.
7. DRIPLINE MPT ADAPTER.
8. PVC TEE (SxSxT) WITH 1/2" FPT OUTLET.
9. PVC SUPPLY MANIFOLD FROM REMOTE CONTROL VALVE ASSEMBLY.
10. WIRE STAKE - EVERY 24", USE ONLY ROUNDED STAKES

22 CENTER FEED MANIFOLD - ON-GRADE

NOT TO SCALE

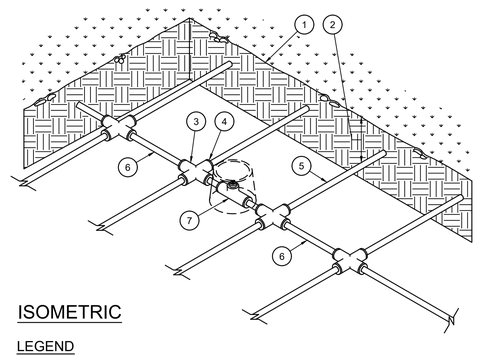

ISOMETRIC

LEGEND

1. FINISH GRADE.
2. DEPTH OF TUBING PER SPECIFICATIONS
3. PVC CROSS (SxSxSxS)
4. COMPRESSION ADAPER.
5. DRIPLINE LATERAL.
6. AIR/VACUUM RELIEF LATERAL, BLANK POLY TUBING CENTERED ON MOUND OR BERM
7. AIR/VACUUM RELIEF VALVE AT HIGH POINT. REFER TO AIR/VACUUM RELIEF VALVE DETAIL.

23 AIR/VACUUM RELIEF LATERAL

NOT TO SCALE

BROOKWATER
IRRIGATION CONSULTANTS
480 ST. JOHN STREET, SUITE 220
PLEASANTON, CALIFORNIA 94566
TEL 925.855.0417 FAX 925.855.0357
E-MAIL JANET@BROOKWATER.COM

JANET S. LUEHRS
Certified Irrigation Designer
CID
43274

"I HAVE COMPLIED WITH THE CRITERIA OF THE MODEL WATER EFFICIENT LANDSCAPE ORDIANCE AND HAVE APPLIED THEM FOR THE EFFICIENT USE OF WATER IN THE IRRIGATION DESIGN PLAN."

LUTSKO ASSOCIATES
landscape
3295 Mission Street
San Francisco, CA 94110-2002
t: 415.920.2600

Consultant:

Stamp:

Project Name:

Burke Road

13505 Burke Road
Los Altos Hills, CA

Sheet Title:

Irrigation Detail

Submittal:	Date:
Planning Set	07-18-19
100% DD Set	11-22-19
50% CD Set	03-30-20
Screening Submittal	05-18-20

Revision:	Date:
1 Per Town Comments	08-06-20

scale: as noted

sheet: L7.4

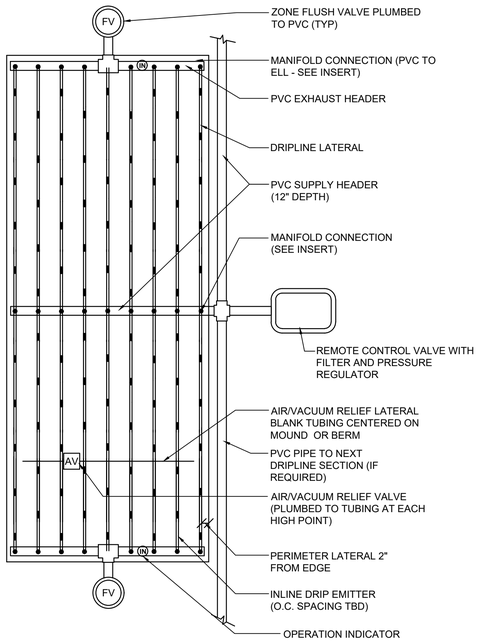

24 CENTER FEED INLINE DRIP LAYOUT

NOT TO SCALE

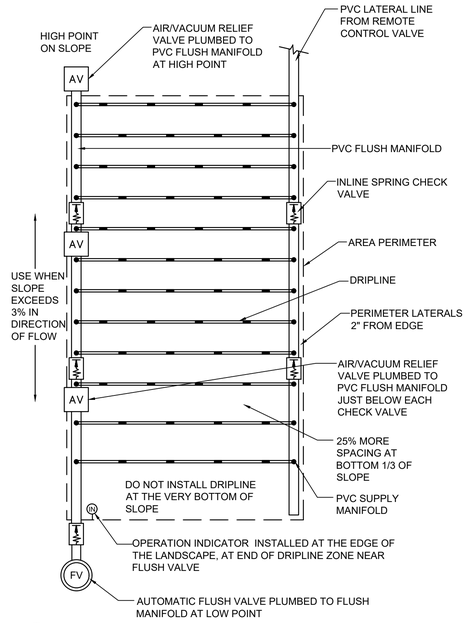

25 INLINE DRIP LAYOUT FOR SLOPES

NOT TO SCALE

"I HAVE COMPLIED WITH THE CRITERIA OF THE MODEL WATER EFFICIENT LANDSCAPE ORDIANCE AND HAVE APPLIED THEM FOR THE EFFICIENT USE OF WATER IN THE IRRIGATION DESIGN PLAN."

JANET S. LUEHRS Certified Irrigation Designer CID 43274

BROOKWATER
IRRIGATION CONSULTANTS
480 ST. JOHN STREET, SUITE 220
PLEASANTON, CALIFORNIA 94566
TEL 925.855.0417 FAX 925.855.0357
E-MAIL JANET@BROOKWATER.COM

CITY OF
LOS ALTOS HILLS
LANDSCAPE WATER USE STATEMENT

PROJECT NAME: BURKE ROAD
PROJECT ADDRESS: 13505 BURKE ROAD

PREPARED BY: JANET LUEHRS (CID, CLIA #006435)
BROOKWATER INC., IRRIGATION CONSULTANTS
FIVE CROW CANYON COURT, SUITE 105
SAN RAMON, CA 94583
925-855-0417
925-855-0357 (FAX)
Janet@Brookwater.com (e-mail)

"I have complied with the criteria of the ordinance and applied them accordingly for the efficient use of water in the irrigation design plan."

Signed: Janet Luehrs

PART ONE PARCEL WATER BUDGET

PBW = [(1.0-Slope) x .8 x ETo x .62 x ((.55 x (An-MDA) + (.45 x SLA)) / 748] +120

AVERAGE SLOPE PERCENTAGE (NEAREST HUNDREDTH)	7.10%
WATER CONSERVATION FACTOR	0.8
YEARLY ETo	43.0
CONVERSION FACTOR	0.62
ET ADJUSTMENT FACTOR	0.55
NET LOT AREA (An)	42340.32 SQUARE FEET
MAXIMUM DEVELOPMENT AREA (MDA)	14580 SQUARE FEET
SPECIAL LANDSCAPE AREA (SLA)	75 SQUARE FEET
TOTAL PARCEL WATER BUDGET (PBW)	**303,188 GALLONS PER YEAR**
TOTAL UNITS (PBW / 748) + 120	**525.33 UNITS (CCF) PER YEAR**

PART TWO ESTIMATED TOTAL WATER USE (ETWU) - LANDSCAPE

(AVERAGE *ETAF* AND *ETWU* FROM WATER EFFICIENT LANDSCAPE WORKSHEET)

AVERAGE ETAF FOR REGULAR LANDSCAPE AREAS (TOTAL ETAF x AREA / TOTAL AREA)	0.49
ETWU FOR REGULAR LANDSCAPE AREAS	**307,204 GALLONS PER YEAR**
SITE WIDE ETAF	0.49
ETWU FOR ALL LANDSCAPE AREAS	**309,204 GALLONS PER YEAR**
TOTAL ACRE FEET	0.95 ACRE FEET
TOTAL CUBIC FEET	41070.120 CUBIC FEET
TOTAL HUNDRED CUBIC FEET	**530.701 UNITS (CCF) PER YEAR**
AVERAGE GALLONS PER DAY	842 GALLONS PER DAY

BURKE ROAD
WATER EFFICIENT LANDSCAPE WORKSHEET

Reference Evapotranspiration (Eto) 43

ZONE NO.	PLANT TYPE	HYDROZONE* (PLANT WATER USE)	PLANT FACTOR (PF)	AVG LANDSCAPE COEFFICIENT	IRRIGATION METHOD**	IRRIGATION EFFICIENCY (IE)	ETAF (PF/IE)	HYDROZONE AREA (HA) (Sq Ft)	ETAF x HA	ESTIMATED TOTAL WATER USE (ETWU)	% LANDSCAPE AREA
REGULAR LANDSCAPE AREA											
C-1	SHRUB	MW	0.50	0.50	DL	0.81	0.62	725	448	11,931	3.1%
C-2	SHRUB	LW	0.30	0.30	DL	0.81	0.37	1,085	402	10,713	4.6%
C-3	TREE	MW	0.50	0.50	B	0.81	0.62	151	93	2,485	0.6%
C-4	SHRUB	MW	0.50	0.50	B	0.81	0.62	173	107	2,847	0.7%
C-5	SHRUB	LW	0.30	0.30	DL	0.81	0.37	1,209	448	11,938	5.1%
C-6	SHRUB	MW	0.50	0.50	DL	0.81	0.62	1,224	756	20,143	5.2%
C-7	SHRUB	LW	0.30	0.30	DL	0.81	0.37	1,422	527	14,041	6.0%
C-8	SHRUB	LW	0.30	0.30	DL	0.81	0.37	1,092	404	10,782	4.6%
C-9	SHRUB	LW	0.30	0.30	DL	0.81	0.37	800	296	7,899	3.4%
C-10	SHRUB	LW	0.30	0.30	DL	0.81	0.37	1,063	394	10,496	4.5%
C-11	TREE	MW	0.50	0.50	B	0.81	0.62	88	54	1,448	0.4%
C-13	SHRUB	LW	0.30	0.30	DL	0.81	0.37	936	347	9,242	4.0%
C-14	SHRUB	MW	0.50	0.50	B	0.81	0.62	322	199	5,299	1.4%
C-15	TURF	WST	0.70	0.70	S	0.75	0.93	891	832	22,170	3.8%
C-16	TURF	WST	0.70	0.70	S	0.75	0.93	1,024	956	25,480	4.3%
C-17	TURF	WST	0.70	0.70	DL	0.81	0.86	220	190	5,069	0.9%
C-18	SHRUB	MW	0.50	0.50	DL	0.81	0.62	908	560	14,943	3.8%
C-19	SHRUB	LW	0.30	0.30	DL	0.81	0.37	1,701	630	16,796	7.2%
C-20	SHRUB	LW	0.30	0.30	DL	0.81	0.37	1,147	425	11,326	4.9%
C-21	SHRUB	LW	0.30	0.30	DL	0.81	0.37	628	233	6,201	2.7%
C-22	TREE	VLW	0.20	0.20	B	0.81	0.25	214	53	1,409	0.9%
C-23	SHRUB	MW	0.50	0.50	DL	0.81	0.62	939	580	15,453	4.0%
C-24	SHRUB	LW	0.30	0.30	DL	0.81	0.37	333	123	3,288	1.4%
C-25	TREE	MW	0.50	0.50	B	0.81	0.62	13	8	214	0.1%
C-26	SHRUB	LW	0.30	0.30	DL	0.81	0.37	1,678	621	16,569	7.1%
C-27	TREE	LW	0.30	0.30	B	0.81	0.37	38	14	375	0.2%
C-28	SHRUB	MW	0.50	0.50	DL	0.81	0.62	905	559	14,893	3.8%
C-29	SHRUB	LW	0.30	0.30	DL	0.81	0.37	1,053	390	10,397	4.5%
C-30	TREE	MW	0.50	0.50	B	0.81	0.62	38	23	625	0.2%
C-31	SHRUB	MW	0.50	0.50	DL	0.81	0.62	696	430	11,454	2.9%
POOL / SPA COVERED		WF	0.80	0.80		1.00	0.80	761	609	16,236	3.2%
FOUNTAIN		WF	0.80	0.80		1.00	0.80	52	42	1,120	0.2%
TOTALS (REGULAR LANDSCAPE AREAS)								**23,529**	**11,751**	**313,283**	**99.7%**
SPECIAL LANDSCAPE AREA											
C-12	TREE	MW			B		1.00	75	47	1,240	0.3%
TOTALS (SPECIAL LANDSCAPE AREAS)								**75**	**47**	**1,240**	**0.3%**
TOTALS FOR ALL AREAS								***23,604***	***11,798***	***314,523***	***100%***

HYDROZONE SUMMARY

*Hydrozone Description	Total Sq. Ft.	% of Landscape
Cool Season Turf (CST)	0	0.0%
Warm Season Turf (WST)	2,135	9.0%
High Water Use Plants (HW)	0	0.0%
Bioretention Plants (BR)	0	0.0%
Medium Water Use Plants (MW)	6,182	26.2%
Low Water Use Plants (LW)	14,185	60.1%
Very Low Water Use Plants (VLW)	214	0.9%
Water Feature	813	3.4%
Special Landscape Area (SLA)	75	0.3%
TOTAL	23,604	100.0%

**Irrigation Method	Total Sq. Ft.	% of Landscape
Rotor (FC-R, PC-R)	0	0.0%
Multi-Stream Rotator (MR)	0	0.0%
Spray (S)	1,915	8.4%
Bubbler (B)	1,112	4.9%
Drip (D)	0	0.0%
In-Line Drip (DL)	19,764	86.7%
Micro Spray (MS)	0	0.0%
Other (O)	0	0.0%

LUTSKO ASSOCIATES
landscape
3295 Mission Street
San Francisco, CA 94110-2002
t: 415.920.2600

Consultant:

Stamp:

Project Name:
Burke Road

13505 Burke Road
Los Altos Hills, CA

Sheet Title:
Irrigation Worksheet

Submittal:	Date:
Planning Set	07-18-19
100% DD Set	11-22-19
50% CD Set	03-30-20
Screening Submittal	05-18-20

Revision:	Date:
1 Per Town Comments	08-06-20

scale: as noted

1 sheet: L7.5

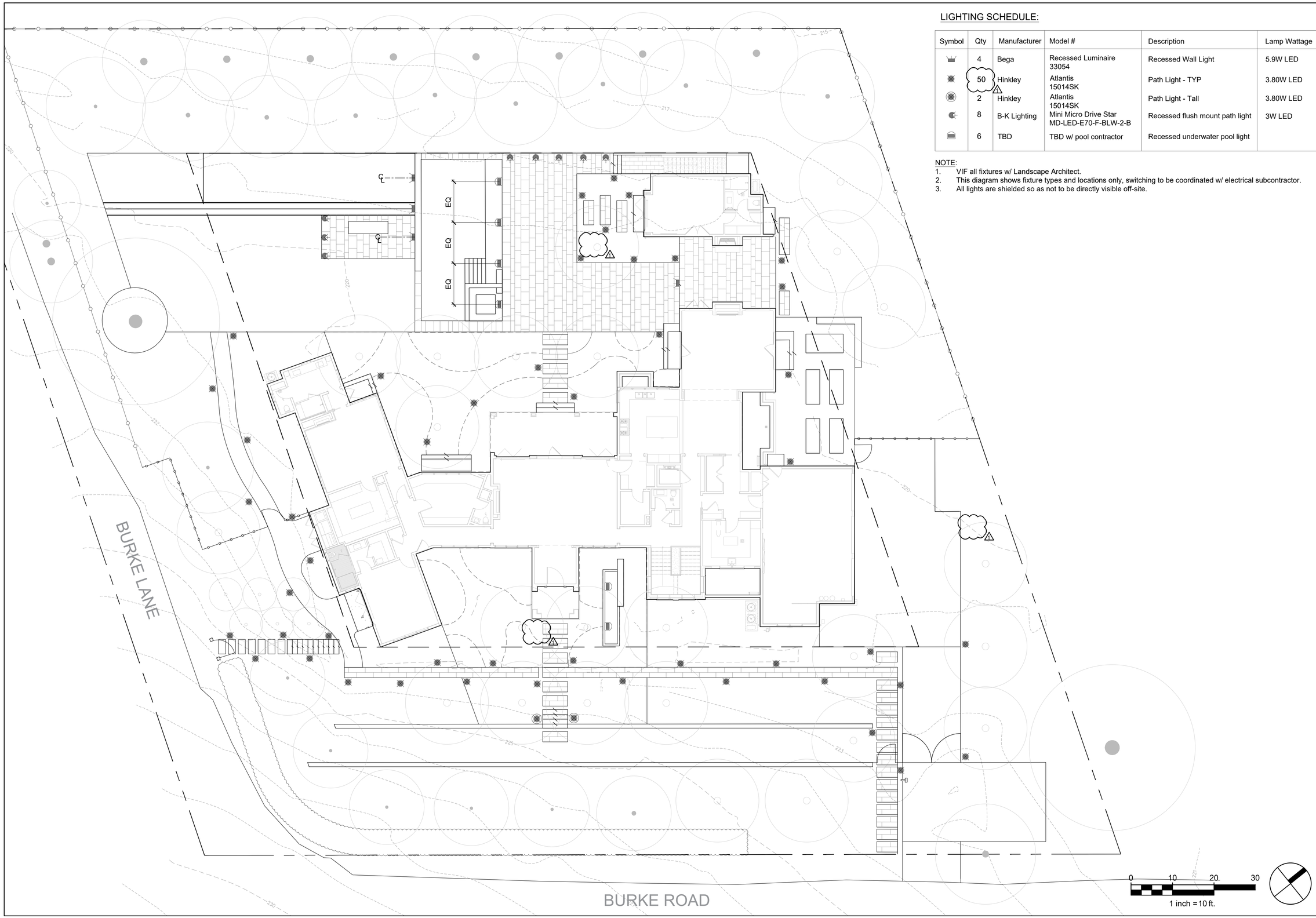

LIGHTING SCHEDULE:

Symbol	Qty	Manufacturer	Model #	Description	Lamp Wattage
	4	Bega	Recessed Luminaire 33054	Recessed Wall Light	5.9W LED
	50	Hinkley	Atlantis 15014SK	Path Light - TYP	3.80W LED
	2	Hinkley	Atlantis 15014SK	Path Light - Tall	3.80W LED
	8	B-K Lighting	Mini Micro Drive Star MD-LED-E70-F-BLW-2-B	Recessed flush mount path light	3W LED
	6	TBD	TBD w/ pool contractor	Recessed underwater pool light	

NOTE:
1. VIF all fixtures w/ Landscape Architect.
2. This diagram shows fixture types and locations only, switching to be coordinated w/ electrical subcontractor.
3. All lights are shielded so as not to be directly visible off-site.

LUTSKO ASSOCIATES
landscape

3295 Mission Street
San Francisco, CA 94110-2002
t: 415.920.2800

Consultant:

Stamp:

LICENSED LANDSCAPE ARCHITECT
NEW LUTSKO, JR. LIC. NO. 2400
09-30-20
05-18-20
STATE OF CALIFORNIA

Project Name:

Burke Road

13505 Burke Road
Los Altos Hills, CA

Sheet Title:

Lighting Diagram

Submittal:	Date:
100% DD Set	11-22-19
50% CD Set	03-30-20
Screening Submittal	05-18-20

Revision:	Date:
1 Per Town Comments	08-06-20

scale: as noted

sheet: L8.1

NOT FOR CONSTRUCTION

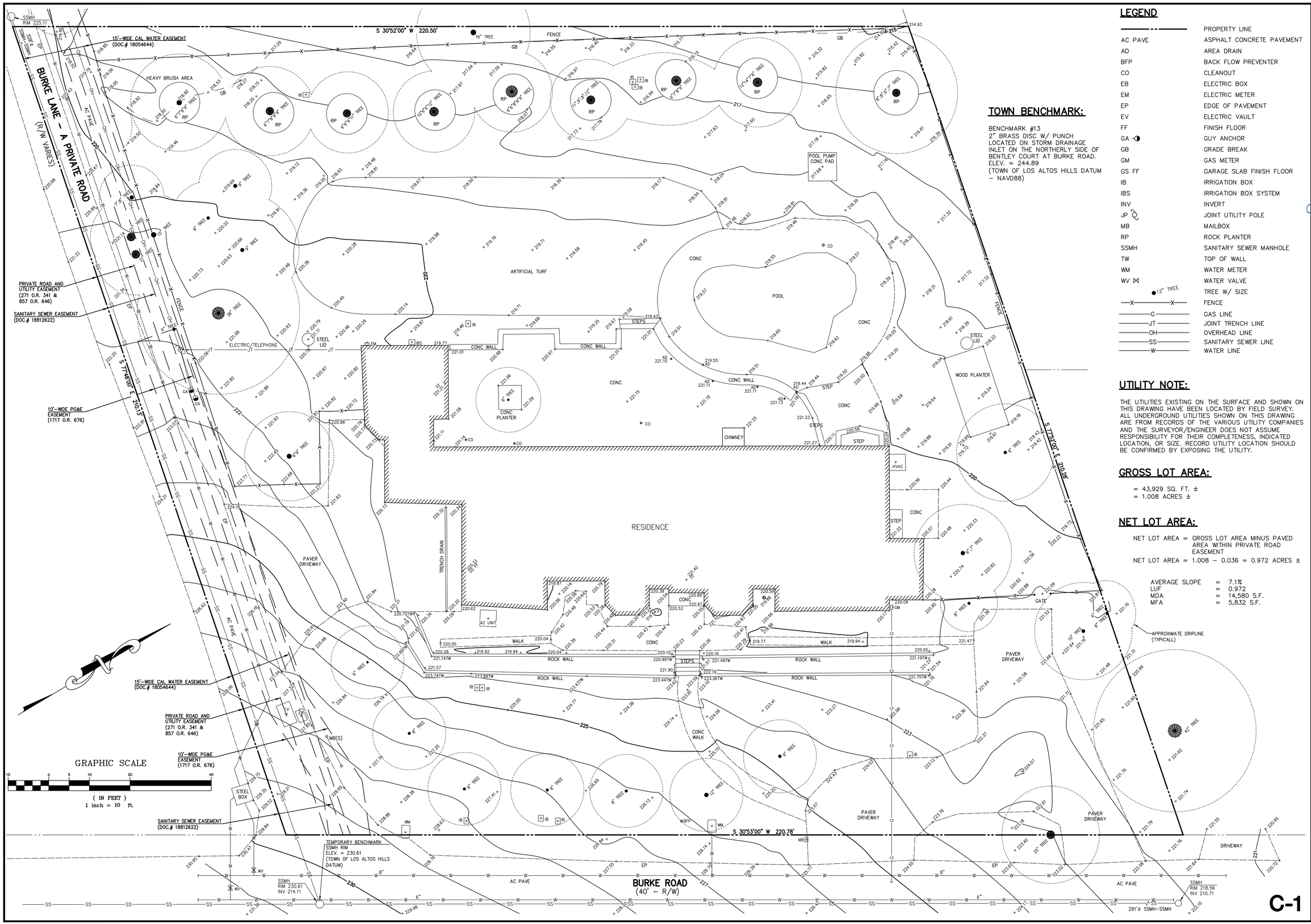

TOWN BENCHMARK:

BENCHMARK #13
2" BRASS DISC W/ PUNCH
LOCATED ON STORM DRAINAGE INLET ON THE NORTHERLY SIDE OF BENTLEY COURT AT BURKE ROAD.
ELEV. = 244.89
(TOWN OF LOS ALTOS HILLS DATUM – NAVD88)

LEGEND

	PROPERTY LINE
AC PAVE	ASPHALT CONCRETE PAVEMENT
AD	AREA DRAIN
BFP	BACK FLOW PREVENTER
CO	CLEANOUT
EB	ELECTRIC BOX
EM	ELECTRIC METER
EP	EDGE OF PAVEMENT
EV	ELECTRIC VAULT
FF	FINISH FLOOR
GA	GUY ANCHOR
GB	GRADE BREAK
GM	GAS METER
GS FF	GARAGE SLAB FINISH FLOOR
IB	IRRIGATION BOX
IBS	IRRIGATION BOX SYSTEM
INV	INVERT
JP	JOINT UTILITY POLE
MB	MAILBOX
RP	ROCK PLANTER
SSMH	SANITARY SEWER MANHOLE
TW	TOP OF WALL
WM	WATER METER
WV	WATER VALVE
12" TREE	TREE W/ SIZE
X	FENCE
G	GAS LINE
JT	JOINT TRENCH LINE
OH	OVERHEAD LINE
SS	SANITARY SEWER LINE
W	WATER LINE

UTILITY NOTE:

THE UTILITIES EXISTING ON THE SURFACE AND SHOWN ON THIS DRAWING HAVE BEEN LOCATED BY FIELD SURVEY. ALL UNDERGROUND UTILITIES SHOWN ON THIS DRAWING ARE FROM RECORDS OF THE VARIOUS UTILITY COMPANIES AND THE SURVEYOR/ENGINEER DOES NOT ASSUME RESPONSIBILITY FOR THEIR COMPLETENESS, INDICATED LOCATION, OR SIZE. RECORD UTILITY LOCATION SHOULD BE CONFIRMED BY EXPOSING THE UTILITY.

GROSS LOT AREA:

= 43,929 SQ. FT. ±
= 1.008 ACRES ±

NET LOT AREA:

NET LOT AREA = GROSS LOT AREA MINUS PAVED AREA WITHIN PRIVATE ROAD EASEMENT
NET LOT AREA = 1.008 – 0.036 = 0.972 ACRES ±

AVERAGE SLOPE	=	7.1%
LUF	=	0.972
MDA	=	14,580 S.F.
MFA	=	5,832 S.F.

REV.	DESCRIPTION	BY:	DATE:
—	PER TOWN COMMENTS	DJK	12/14/18

LICENSED LAND SURVEYOR DANIEL G. MACLEOD No. 5304 STATE OF CALIFORNIA

MacLEOD AND ASSOCIATES
CIVIL ENGINEERING • LAND SURVEYING
965 CENTER STREET • SAN CARLOS • CA 94070 • (650) 593–8580

PREPARED FOR:
JENNY WILLIAMS

TOPOGRAPHIC SURVEY PLAN

13505 BURKE ROAD
A.P.N. 175–26–013
DOC.# 23864932
LOS ALTOS HILLS SANTA CLARA COUNTY CALIFORNIA

DRAWN BY:	MDL
DESIGNED BY:	---
CHECKED BY:	DGM
SCALE:	1"=10'
DATE:	05–30–18
DRAWING NO.	4570–TOPO
SHEET	1 OF 6

C-1

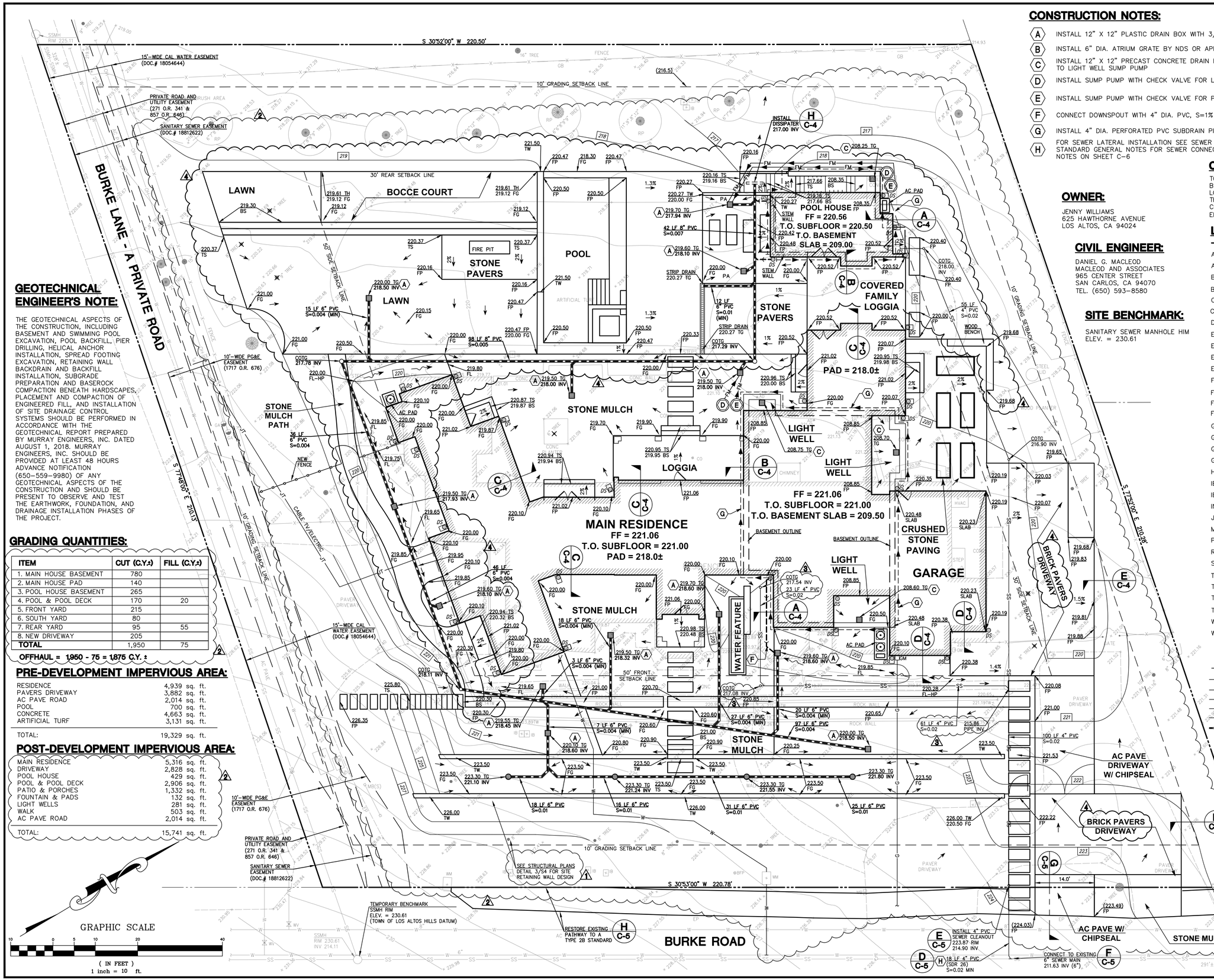

GEOTECHNICAL ENGINEER'S NOTE:

THE GEOTECHNICAL ASPECTS OF THE CONSTRUCTION, INCLUDING BASEMENT AND SWIMMING POOL EXCAVATION, POOL BACKFILL, PIER DRILLING, HELICAL ANCHOR INSTALLATION, SPREAD FOOTING EXCAVATION, RETAINING WALL BACKDRAIN AND BACKFILL INSTALLATION, SUBGRADE PREPARATION AND BASEROCK COMPACTION BENEATH HARDSCAPES, PLACEMENT AND COMPACTION OF ENGINEERED FILL, AND INSTALLATION OF SITE DRAINAGE CONTROL SYSTEMS SHOULD BE PERFORMED IN ACCORDANCE WITH THE GEOTECHNICAL REPORT PREPARED BY MURRAY ENGINEERS, INC. DATED AUGUST 1, 2018. MURRAY ENGINEERS, INC. SHOULD BE PROVIDED AT LEAST 48 HOURS ADVANCE NOTIFICATION (650-559-9980) OF ANY GEOTECHNICAL ASPECTS OF THE CONSTRUCTION AND SHOULD BE PRESENT TO OBSERVE AND TEST THE EARTHWORK, FOUNDATION, AND DRAINAGE INSTALLATION PHASES OF THE PROJECT.

GRADING QUANTITIES:

ITEM	CUT (C.Y.±)	FILL (C.Y.±)
1. MAIN HOUSE BASEMENT	780	
2. MAIN HOUSE PAD	140	
3. POOL HOUSE BASEMENT	265	
4. POOL & POOL DECK	170	20
5. FRONT YARD	215	
6. SOUTH YARD	80	
7. REAR YARD	95	55
8. NEW DRIVEWAY	205	
TOTAL	1,950	75

OFFHAUL = 1950 - 75 = 1,875 C.Y. ±

PRE-DEVELOPMENT IMPERVIOUS AREA:

RESIDENCE	4,939 sq. ft.
PAVERS DRIVEWAY	3,882 sq. ft.
AC PAVE ROAD	2,014 sq. ft.
POOL	700 sq. ft.
CONCRETE	4,663 sq. ft.
ARTIFICIAL TURF	3,131 sq. ft.
TOTAL:	19,329 sq. ft.

POST-DEVELOPMENT IMPERVIOUS AREA:

MAIN RESIDENCE	5,316 sq. ft.
DRIVEWAY	2,828 sq. ft.
POOL HOUSE	429 sq. ft.
POOL & POOL DECK	2,906 sq. ft.
PATIO & PORCHES	1,332 sq. ft.
FOUNTAIN & PADS	132 sq. ft.
LIGHT WELLS	281 sq. ft.
WALK	503 sq. ft.
AC PAVE ROAD	2,014 sq. ft.
TOTAL:	15,741 sq. ft.

CONSTRUCTION NOTES:

- (A) INSTALL 12" X 12" PLASTIC DRAIN BOX WITH 3/4" GRATE OPENING BY NDS OR APPROVED EQUAL
- (B) INSTALL 6" DIA. ATRIUM GRATE BY NDS OR APPROVED EQUAL
- (C) INSTALL 12" X 12" PRECAST CONCRETE DRAIN BOX WITH GRATE COVER AND CONNECT TO LIGHT WELL SUMP PUMP
- (D) INSTALL SUMP PUMP WITH CHECK VALVE FOR LIGHT WELL DRAINS (F C-4)
- (E) INSTALL SUMP PUMP WITH CHECK VALVE FOR PERIMETER SUBDRAIN (G C-4)
- (F) CONNECT DOWNSPOUT WITH 4" DIA. PVC, S=1% MIN (TYPICAL)
- (G) INSTALL 4" DIA. PERFORATED PVC SUBDRAIN PIPE AT 1.5% MIN. SLOPE (TYPICAL)
- (H) FOR SEWER LATERAL INSTALLATION SEE SEWER STANDARD TRENCHING DETAILS, STANDARD GENERAL NOTES FOR SEWER CONNECTION AND TRAFFIC CONTROL GENERAL NOTES ON SHEET C-6

OWNER:

JENNY WILLIAMS
625 HAWTHORNE AVENUE
LOS ALTOS, CA 94024

CIVIL ENGINEER:

DANIEL G. MACLEOD
MACLEOD AND ASSOCIATES
965 CENTER STREET
SAN CARLOS, CA 94070
TEL. (650) 593-8580

SITE BENCHMARK:

SANITARY SEWER MANHOLE HIM
ELEV. = 230.61

CITY BENCHMARK:

TOWN OF LOS ALTOS HILLS
BENCHMARK #13
LOCATED ON STORM DRAINAGE INLET AT THE NORTHERLY SIDE OF BENTLEY COURT AT BURKE ROAD
ELEVATION = 244.89 (NAVD88 DATUM)

LEGEND

	PROPERTY LINE
AC PAVE	ASPHALT CONCRETE PAVEMENT
AD	AREA DRAIN
BFP	BACK FLOW PREVENTER
BS	BOTTOM OF STEP
CO	CLEANOUT
COTG	CLEANOUT TO FINISH GRADE
DS	DOWNSPOUT
EB	ELECTRIC BOX
EM	ELECTRIC METER
EP	EDGE OF PAVEMENT
EV	ELECTRIC VAULT
FF	FINISH FLOOR
FG	FINISH GRADE
FL	FLOWLINE
FP	FINISH PAVE
GA	GUY ANCHOR
GB	GRADE BREAK
GM	GAS METER
GS FF	GARAGE SLAB FINISH FLOOR
HP	HIGH POINT
IB	IRRIGATION BOX
IBS	IRRIGATION BOX SYSTEM
INV	INVERT
JP	JOINT UTILITY POLE
MB	MAILBOX
PA	PLANTING AREA
RP	ROCK PLANTER
SSMH	SANITARY SEWER MANHOLE
TG	TOP OF GRATE
TH	TOP OF HEADER
TS	TOP OF STEP
TW	TOP OF WALL
WM	WATER METER
WV	WATER VALVE
12" TREE	TREE W/ SIZE
12" TREE	EXIST. TREE TO BE REMOVED
X	FENCE
G	GAS LINE
JT	JOINT TRENCH LINE
OH	OVERHEAD LINE
SS	SANITARY SEWER LINE
W	WATER LINE
	NEW STORM DRAIN LINE
DS	DOWNSPOUT WITH PRECAST CONCRETE SPLASH BLOCK
FM	FORCEMAIN

REV.	DESCRIPTION	BY:	DATE:
4	LANDSCAPE REVISION	DJK	05/05/20
3	ADD SEWER LATERAL	VPG	10/23/19
2	SITE PLAN REVISION	DJK	08/01/19
1	PER TOWN COMMENTS	DJK	04/17/19
	ADD TYPE 2B PATH	DJK	02/20/19

REGISTERED PROFESSIONAL ENGINEER DANIEL G. MACLEOD No. 35048 CIVIL STATE OF CALIFORNIA

MacLEOD AND ASSOCIATES
CIVIL ENGINEERING • LAND SURVEYING
965 CENTER STREET • SAN CARLOS • CA 94070 • (650) 593-8580

PREPARED FOR: JENNY WILLIAMS

GRADING AND DRAINAGE PLAN

13505 BURKE ROAD
LOS ALTOS HILLS SANTA CLARA COUNTY CALIFORNIA

DRAWN BY:	DJK
DESIGNED BY:	VPG/DJK
CHECKED BY:	DGM
SCALE:	1"=10'
DATE:	10/08/18
DRAWING NO.	4570-GRAD
SHEET	2 OF 6

C-2

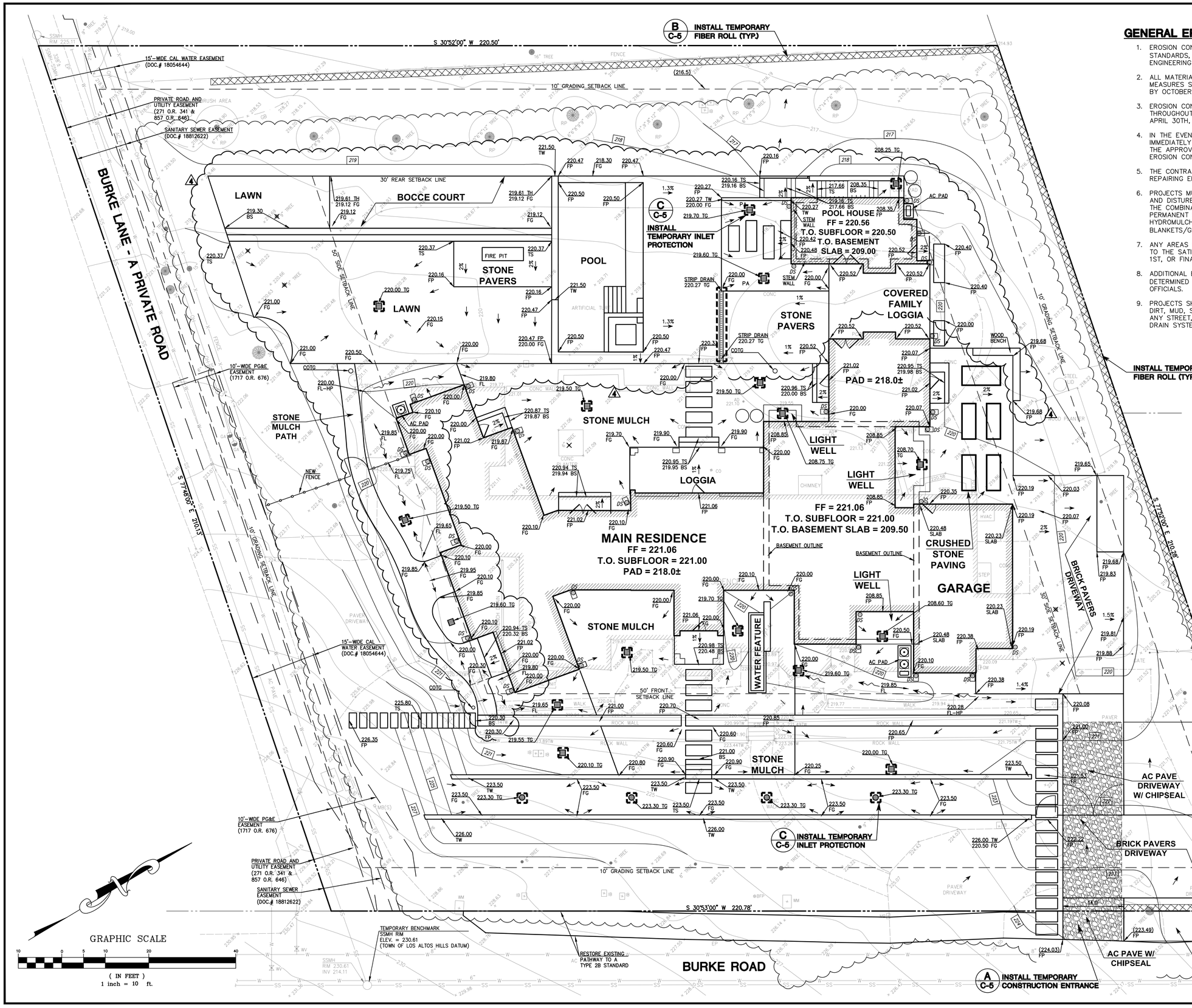

GENERAL EROSION CONTROL NOTES:

1. EROSION CONTROL MEASURES SHALL CONFORM TO ABAG STANDARDS, TOWN STANDARDS AND THE APPROVAL OF THE TOWN'S ENGINEERING DEPARTMENT.
2. ALL MATERIALS NECESSARY FOR THE APPROVED EROSION CONTROL MEASURES SHALL BE ON SITE BY SEPTEMBER 15TH AND IN PLACE BY OCTOBER 1ST.
3. EROSION CONTROL SYSTEMS SHALL BE INSTALLED AND MAINTAINED THROUGHOUT THE RAINY SEASON, OR FROM OCTOBER 1ST THROUGH APRIL 30TH, WHICHEVER IS LONGER.
4. IN THE EVENT OF RAIN, ALL GRADING WORK IS TO CEASE IMMEDIATELY AND THE SITE IS TO BE SEALED IN ACCORDANCE WITH THE APPROVED EROSION CONTROL MEASURES AND APPROVED EROSION CONTROL PLAN.
5. THE CONTRACTOR SHALL BE RESPONSIBLE FOR CHECKING AND REPAIRING EROSION CONTROL SYSTEMS AFTER EACH STORM.
6. PROJECTS MUST HAVE ALL CUT AND FILL SLOPES PROTECTED BY AND DISTURBED AREAS BY ONE OF THE FOLLOWING MEASURES OR THE COMBINATION OF THEM: TEMPORARY SEEDING AND MULCHING, PERMANENT SEEDING AND MULCHING, HYDROMULCHING–HYDROSEEDING, EROSION CONTROL BLANKETS/GEOTEXTILES, AND FIBER ROLLS.
7. ANY AREAS OF DISTURBED SOIL SHALL BE SEEDED OR REPLANTED TO THE SATISFACTION OF THE CITY ENGINEER PRIOR TO OCTOBER 1ST, OR FINAL INSPECTION, WHICHEVER IS SOONER.
8. ADDITIONAL EROSION CONTROL MEASURES MAY BE REQUIRED AS DETERMINED BY TOWN'S ENGINEERING DEPARTMENT OR BUILDING OFFICIALS.
9. PROJECTS SHALL PREVENT ANY ACCUMULATION OR DEPOSIT OF DIRT, MUD, SAND, ROCKS, GRAVEL OR DEBRIS ON THE SURFACE OF ANY STREET, ALLEY OR PUBLIC PLACE OR IN ANY PUBLIC STORM DRAIN SYSTEM.

REV.	DESCRIPTION	BY:	DATE:
4	LANDSCAPE REVISION	DJK	05/05/20
3	SITE PLAN REVISION	DJK	08/01/19
2	ADD TYPE 2B PATH	DJK	02/20/19
1	PER TOWN COMMENTS/SITE REV.	DJK	12/14/18

REGISTERED PROFESSIONAL ENGINEER
DANIEL G. MACLEOD
No. 35048
CIVIL
STATE OF CALIFORNIA

MacLEOD AND ASSOCIATES
CIVIL ENGINEERING • LAND SURVEYING
965 CENTER STREET • SAN CARLOS • CA 94070 • (650) 593-8580

PREPARED FOR:
JENNY WILLIAMS

EROSION AND SEDIMENTATION CONTROL PLAN

13505 BURKE ROAD
LOS ALTOS HILLS SANTA CLARA COUNTY CALIFORNIA

DRAWN BY:	DJK
DESIGNED BY:	VPG/DJK
CHECKED BY:	DGM
SCALE:	1"=10'
DATE:	10/08/18
DRAWING NO.	4570-GRAD
SHEET	3 OF 6

C-3

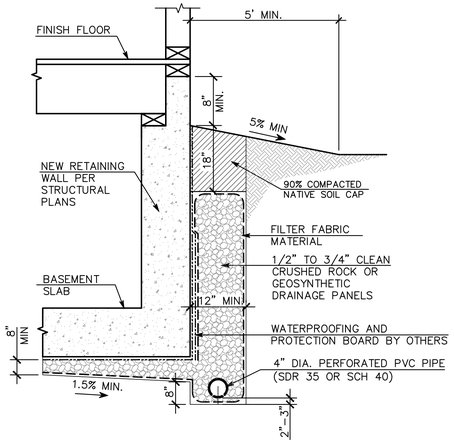

A HOUSE (W/ BASEMENT) & POOL HOUSE PERIMETER GRADING ADJACENT TO PERVIOUS SURFACE

(NOT TO SCALE)

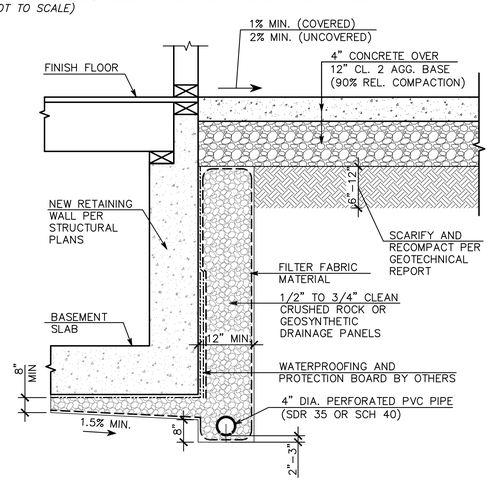

B HOUSE (W/ BASEMENT) & POOL HOUSE PERIMETER GRADING ADJACENT TO IMPERVIOUS SURFACE

(NOT TO SCALE)

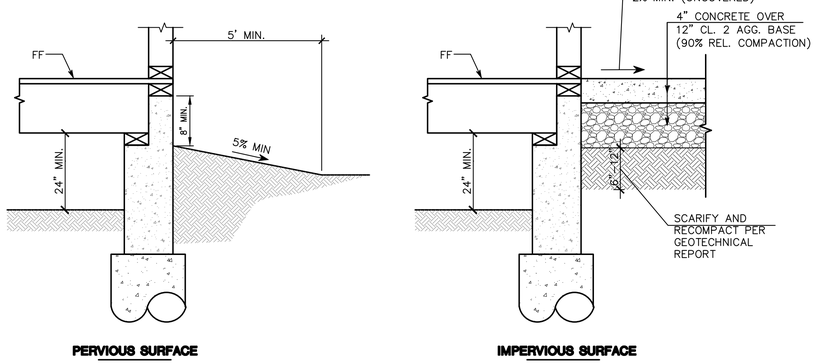

C HOUSE PERIMETER GRADING (W/ CRAWLSPACE)

(NOT TO SCALE)

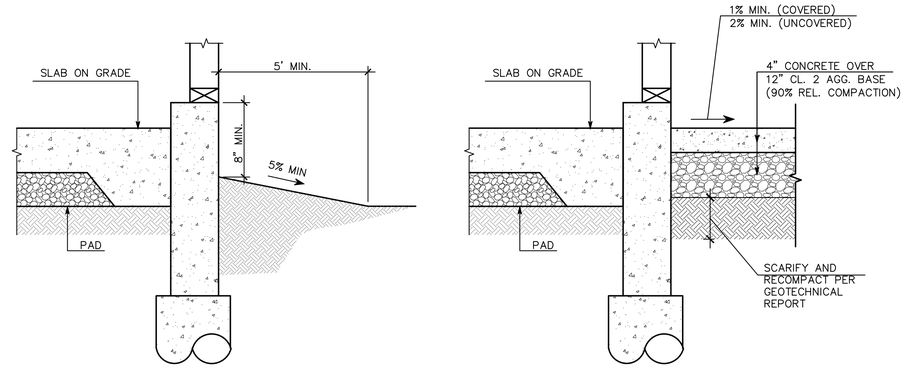

D GARAGE PERIMETER GRADING

SCALE: (NOT TO SCALE)

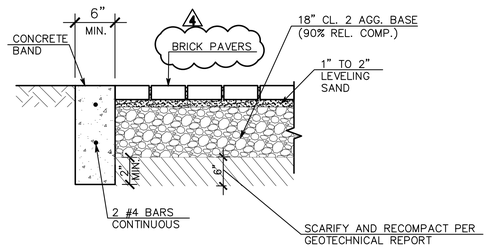

E DRIVEWAY PAVEMENT SECTION

(NOT TO SCALE)

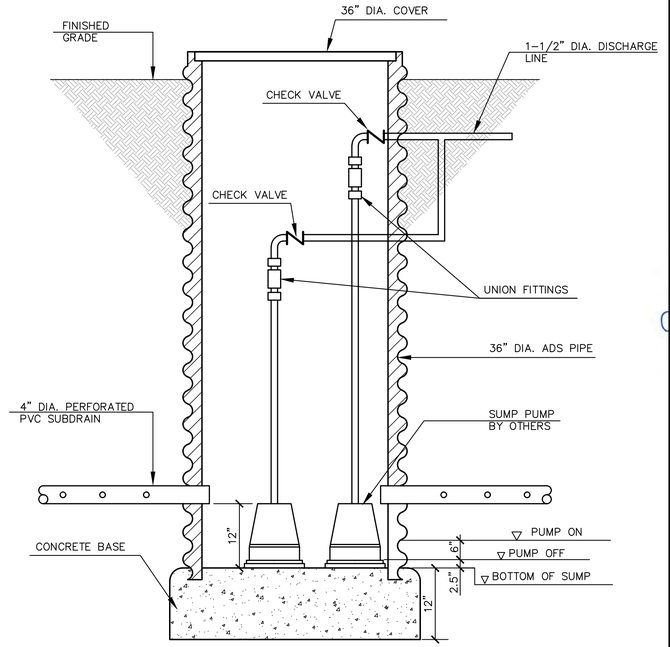

G SUMP PUMP SCHEMATIC DETAIL (BASEMENT SUBDRAIN)

(NOT TO SCALE)

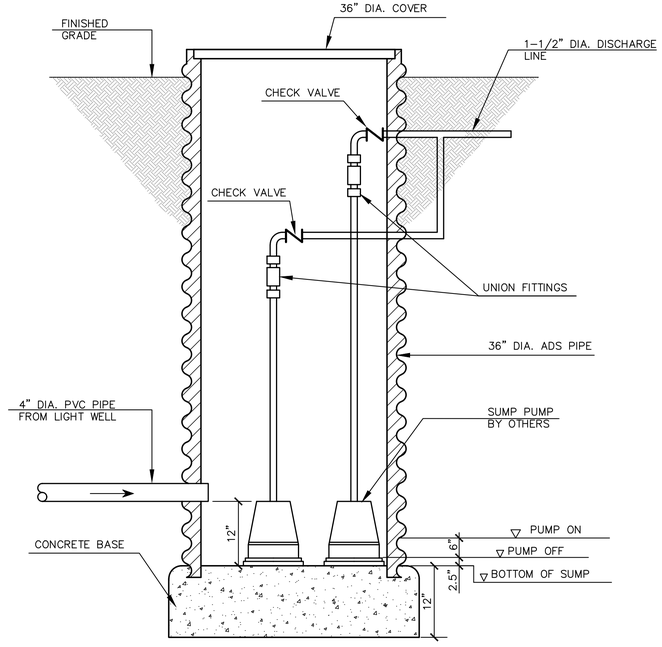

F SUMP PUMP SCHEMATIC DETAIL (LIGHTWELL DRAIN SYSTEM)

(NOT TO SCALE)

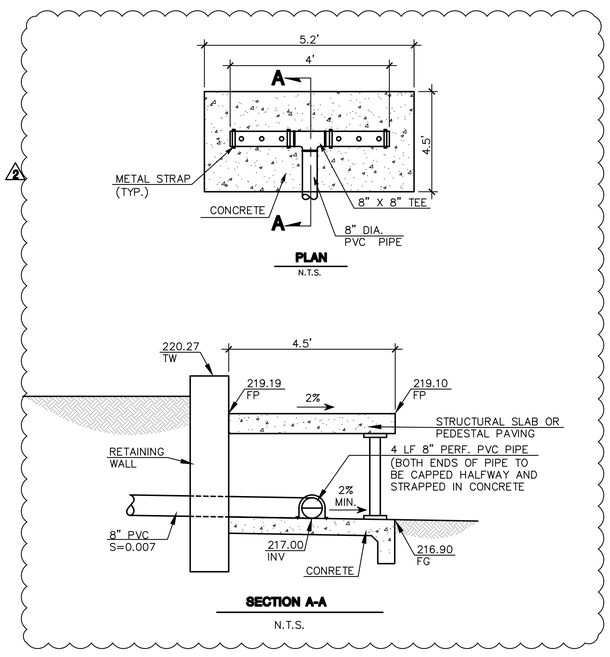

H ENERGY DISSIPATER

SCALE: NOT TO SCALE

REV.	DESCRIPTION	BY:	DATE:
1	PER TOWN COMMENTS/SITE REV.	DJK	12/14/18
2	SITE PLAN REVISION	DJK	08/01/19
3	LANDSCAPE REVISION	DJK	04/29/20
4	LANDSCAPE REVISION	DJK	04/29/20
5	LANDSCAPE REVISION	DJK	04/29/20

REGISTERED PROFESSIONAL ENGINEER DANIEL G. MacLEOD No. 35048 CIVIL STATE OF CALIFORNIA

MacLEOD AND ASSOCIATES
CIVIL ENGINEERING • LAND SURVEYING
965 CENTER STREET • SAN CARLOS • CA 94070 • (650) 593-8580

PREPARED FOR: JENNY WILLIAMS

CIVIL DETAILS

LOS ALTOS HILLS SANTA CLARA COUNTY CALIFORNIA

DRAWN BY:	DJK
DESIGNED BY:	VPG/DJK
CHECKED BY:	DGM
SCALE:	NONE
DATE:	10/08/18
DRAWING NO.	4570-GRAD
SHEET	4 OF 6

C-4

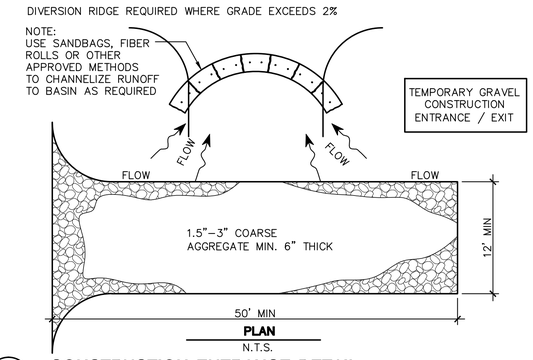

TEMPORARY GRAVEL CONSTRUCTION ENTRANCE / EXIT

THE ENTRANCE SHALL BE MAINTAINED IN CONDITION THAT WILL PREVENT TRACKING OR FLOWING OF SEDIMENT ONTO PUBLIC–RIGHT OF WAYS. THIS MAY REQUIRE TOP DRESSING, REPAIR AND /OR CLEANUP OF ANY MEASURES USED TO TRAP SEDIMENT.

WHEN NECESSARY, WHEELS SHALL BE CLEANED PRIOR TO ENTRANCE ONTO PUBLIC RIGHT OF WAY.

WHEN WASHING IS REQUIRED, IT SHALL BE DONE ON AN AREA STABILIZED WITH CRUSHED STONE THAT DRAINS INTO AN APPROVED SEDIMENT TRAP OR SEDIMENT BASIN.

A CONSTRUCTION ENTRANCE DETAIL

SCALE: (NOT TO SCALE)

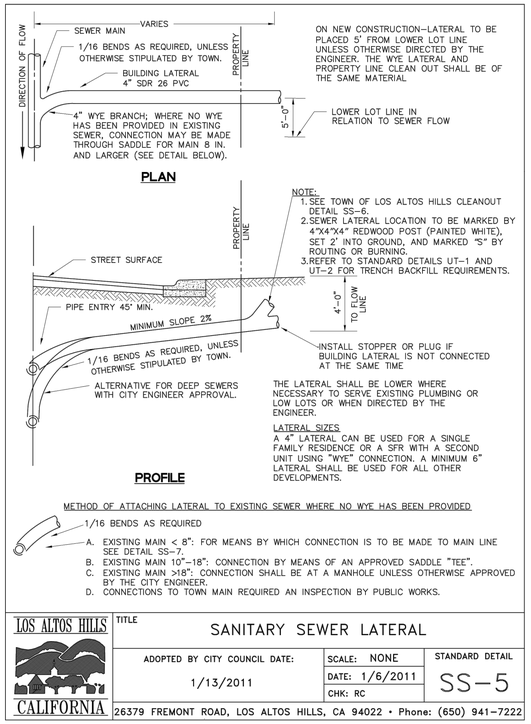

ON NEW CONSTRUCTION–LATERAL TO BE PLACED 5' FROM LOWER LOT LINE UNLESS OTHERWISE DIRECTED BY THE ENGINEER. THE WYE LATERAL AND PROPERTY LINE CLEAN OUT SHALL BE OF THE SAME MATERIAL

NOTE:
1. SEE TOWN OF LOS ALTOS HILLS CLEANOUT DETAIL SS–6.
2. SEWER LATERAL LOCATION TO BE MARKED BY 4"X4"X4" REDWOOD POST (PAINTED WHITE), SET 2' INTO GROUND, AND MARKED "S" BY ROUTING OR BURNING.
3. REFER TO STANDARD DETAILS UT–1 AND UT–2 FOR TRENCH BACKFILL REQUIREMENTS.

THE LATERAL SHALL BE LOWER WHERE NECESSARY TO SERVE EXISTING PLUMBING OR LOW LOTS OR WHEN DIRECTED BY THE ENGINEER.

LATERAL SIZES
A 4" LATERAL CAN BE USED FOR A SINGLE FAMILY RESIDENCE OR A SFR WITH A SECOND UNIT USING "WYE" CONNECTION. A MINIMUM 6" LATERAL SHALL BE USED FOR ALL OTHER DEVELOPMENTS.

METHOD OF ATTACHING LATERAL TO EXISTING SEWER WHERE NO WYE HAS BEEN PROVIDED

LOS ALTOS HILLS CALIFORNIA

TITLE SANITARY SEWER LATERAL

ADOPTED BY CITY COUNCIL DATE:	SCALE: NONE	STANDARD DETAIL
1/13/2011	DATE: 1/6/2011	SS–5
	CHK: RC	

26379 FREMONT ROAD, LOS ALTOS HILLS, CA 94022 • Phone: (650) 941–7222

D SANITARY SEWER LATERAL

SCALE: (NOT TO SCALE)

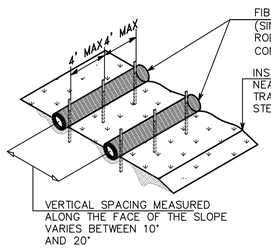

TYPICAL FIBER ROLL INSTALLATION

N.T.S.

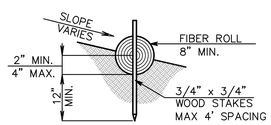

ENTRENCHMENT DETAIL

N.T.S.

B FIBER ROLL DETAIL

SCALE: (NOT TO SCALE)

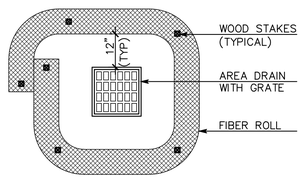

C DRAIN INLET PROTECTION DETAIL

SCALE: NOT TO SCALE

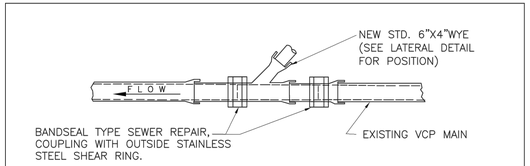

NOTE:
THE NEWLY INSTALLED WYE SHALL BE OF THE SAME MATERIAL AS THE EXISTING MAIN.

VITRIFIED CLAY (VCP)

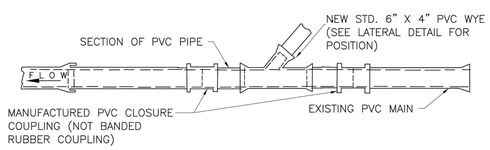

NOTE:
ALL PVC, PIPE AND FITTINGS SHALL BE SDR 26 AND SHALL HAVE RUBBER GASKETED JOINTS. SOLVENT WELDED JOINTS SHALL NOT BE ALLOWED

POLYVINYL CHLORIDE PIPE (PVC)

NOTE:
LATERAL CONNECTION INSTALLATION ON NEWLY INSTALLED PIPE WILL BE AS DIRECTED BY THE DEPARTMENT OF PUBLIC WORKS.

LOS ALTOS HILLS CALIFORNIA

TITLE LATERAL CONNECTION TO EXISTING SEWER MAIN

ADOPTED BY CITY COUNCIL DATE:	SCALE: NONE	STANDARD DETAIL
1/13/2011	DATE: 1/4/2011	SS–7
	CHK: RC	

26379 FREMONT ROAD, LOS ALTOS HILLS, CA 94022 • Phone: (650) 941–7222

F SANITARY SEWER LATERAL CONNECTION TO (E) MAIN

SCALE: (NOT TO SCALE)

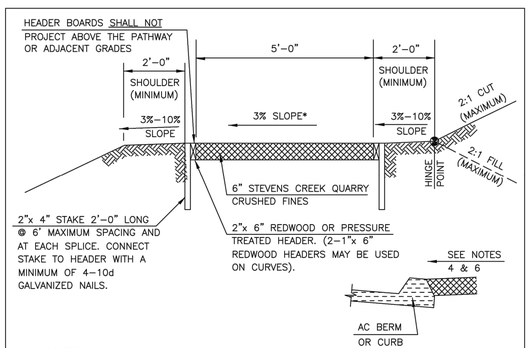

NOTES:

1. PATHWAY MATERIAL AND SHOULDERS SHALL BE COMPACTED TO 95% RELATIVE DENSITY.
2. IRRIGATION SYSTEMS SHALL NOT BE LOCATED CLOSER THAN 3 FEET TO A PATHWAY. NO IRRIGATION WATER MAY BE DIRECTED TOWARD OR ON THE PATHWAY.
3. TREES AND SHRUBS SHALL NOT BE PLANTED CLOSER THAN 5 FEET TO A PATHWAY. GROUND COVER MAY NOT BE PLANTED CLOSER THAN 3 FEET FROM A PATHWAY.
*4. 5% MAXIMUM IF APPROVED BY THE CITY ENGINEER. PATHWAY AND SHOULDER CROSS SLOPES SHALL DRAIN TOWARD OR AWAY FROM THE ADJACENT ROAD AS APPROVED BY THE CITY ENGINEER.
5. UTILITY BOXES, SERVICE METERS, MANHOLES, MAIL BOXES, FIRE HYDRANTS AND ALL OTHER OBSTRUCTIONS SHALL NOT BE ALLOWED WITHIN THE PATHWAY. PATHWAYS MAY MEANDER AROUND EXISTING UTILITY POLES, FIRE HYDRANTS AND MAIL BOXES WHERE FEASIBLE.
6. HEADER BOARDS MAY BE OMITTED ON THE SIDE OF THE PATHWAY IMMEDIATELY ADJACENT TO BERM AND CURBS.
7. SEE STANDARD DETAIL #21 FOR WATER BAR INSTALLATION.

LOS ALTOS HILLS CALIFORNIA

TITLE ROADSIDE PATH TYPE (2B)

ADOPTED BY CITY COUNCIL DATE:	SCALE: NONE	STANDARD DETAIL
12/07/2011	DATE: 11/18/2011	15
	CHK: JMP	

26379 FREMONT ROAD, LOS ALTOS HILLS, CA 94022 • Phone: (650) 941–7222

H ROADSIDE PATH TYPE (2B) STANDARD DETAIL

SCALE: (NOT TO SCALE)

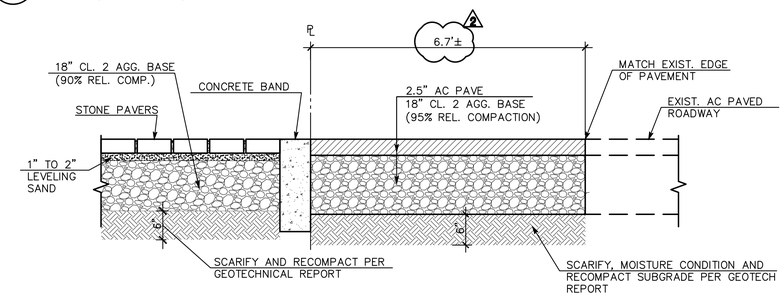

G DRIVEWAY PAVEMENT SECTION

(NOT TO SCALE)

GENERAL NOTES:

1. RAIN WATER LEADERS SHALL DISPERSE ONTO PRECAST CONCRETE SPLASH BLOCKS OR IMPERVIOUS AREAS AND DISSIPATE INTO LANDSCAPE AREAS, UNLESS OTHERWISE NOTED.
2. ALL MATERIALS SHALL BE FURNISHED BY AND INSTALLED BY THE CONTRACTOR UNLESS OTHERWISE NOTED.
3. WHEN APPLICABLE, ALL CONSTRUCTION MATERIALS AND METHODS SHALL COMPLY WITH THE ORDINANCES, SPECIFICATIONS AND STANDARDS OF THE TOWN OF LOS ALTOS HILLS, UNLESS OTHERWISE NOTED.
4. CONTRACTOR SHALL NOTIFY UNDERGROUND SERVICE ALERT (U.S.A.) PRIOR TO START OF CONSTRUCTION. PHONE (800) 227–2600.
5. THE CONTRACTOR SHALL BE RESPONSIBLE FOR DISTRIBUTING ANY EXCESS MATERIAL OR SUPPLYING MATERIAL FOR DEFICIENCIES TO BRING DRIVEWAY AND BUILDING PADS TO REQUIRED GRADE.
6. UTILITIES AND UNDERGROUND FACILITIES INDICATED ARE FOR INFORMATION ONLY. IT IS THE CONTRACTOR'S RESPONSIBILITY TO VERIFY THE LOCATION AND DEPTH WITH THE APPROPRIATE AGENCIES. NEITHER THE OWNER NOR THE CITY OR THE ENGINEER ASSUMES RESPONSIBILITY THAT THE UTILITIES AND UNDERGROUND FACILITIES INDICATED WILL BE THE UTILITIES AND UNDERGROUND FACILITIES ENCOUNTERED.
7. THE CONTRACTOR IS RESPONSIBLE FOR MATCHING EXISTING SURROUNDING LANDSCAPE AND OTHER IMPROVEMENTS WITH A SMOOTH TRANSITION IN PAVING, GRADING, ETC., AND TO AVOID ABRUPT OR APPARENT CHANGES OR CROSS SLOPES, LOW SPOTS OR HAZARDOUS CONDITIONS.
8. THE CONTRACTOR SHALL BE RESPONSIBLE FOR OBTAINING NECESSARY PERMITS FOR ALL WORK SHOWN ON THESE PLANS.

REV.	DESCRIPTION	BY:	DATE:
4	SITE PLAN REVISION	DJK	08/01/19
—	ADD TYPE 2B PATH	DJK	02/20/19
—	PER TOWN COMMENTS/SITE REV.	DJK	12/14/18

REGISTERED PROFESSIONAL ENGINEER DANIEL G. MACLEOD No. 35048 CIVIL STATE OF CALIFORNIA

MacLEOD AND ASSOCIATES
CIVIL ENGINEERING • LAND SURVEYING
965 CENTER STREET • SAN CARLOS • CA 94070 • (650) 593–8580

PREPARED FOR: JENNY WILLIAMS

CIVIL DETAILS & NOTES

LOS ALTOS HILLS SANTA CLARA COUNTY CALIFORNIA

DRAWN BY:	DJK
DESIGNED BY:	VPG/DJK
CHECKED BY:	DGM
SCALE:	NONE
DATE:	10/08/18
DRAWING NO.	4570–GRAD
SHEET	5 OF 6

C-5

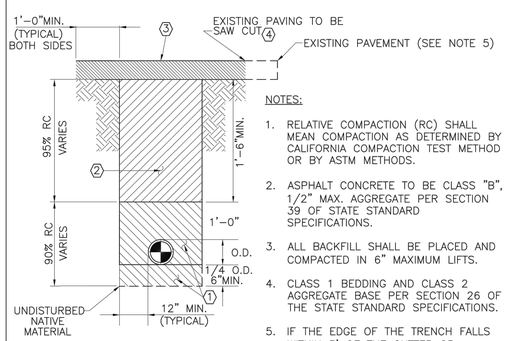

NOTES:

1. RELATIVE COMPACTION (RC) SHALL MEAN COMPACTION AS DETERMINED BY CALIFORNIA COMPACTION TEST METHOD OR BY ASTM METHODS.
2. ASPHALT CONCRETE TO BE CLASS "B", 1/2" MAX. AGGREGATE PER SECTION 39 OF STATE STANDARD SPECIFICATIONS.
3. ALL BACKFILL SHALL BE PLACED AND COMPACTED IN 6" MAXIMUM LIFTS.
4. CLASS 1 BEDDING AND CLASS 2 AGGREGATE BASE PER SECTION 26 OF THE STATE STANDARD SPECIFICATIONS.
5. IF THE EDGE OF THE TRENCH FALLS WITHIN 3' OF THE GUTTER OR SHOULDER EDGE, THE ENTIRE PAVEMENT SHALL BE REMOVED.

LEGEND:

1. CLASS 1 BEDDING (3/4" DRAIN ROCK)
2. CLASS 2 AGGREGATE BASE, 3/4" MAX.
3. 6" ASPHALT CONCRETE OR MATCH EXISTING DEPTH, WHICHEVER IS GREATER. AC SHALL BE PLACED IN 4" LIFTS MAX.
4. APPLY TACK COAT ON SAW CUT EDGES PER SECTION 94 OF STATE SPECIFICATIONS.

LOS ALTOS HILLS CALIFORNIA	TITLE BACKFILL DETAIL – STREET		
	ADOPTED BY CITY COUNCIL DATE: 1/13/2011	SCALE: NONE DATE: 1/4/2011 CHK: RC	STANDARD DETAIL UT–1
	26379 FREMONT ROAD, LOS ALTOS HILLS, CA 94022 • Phone: (650) 941–7222		

(A) CITY STANDARD DETAIL

SCALE: (NOT TO SCALE)

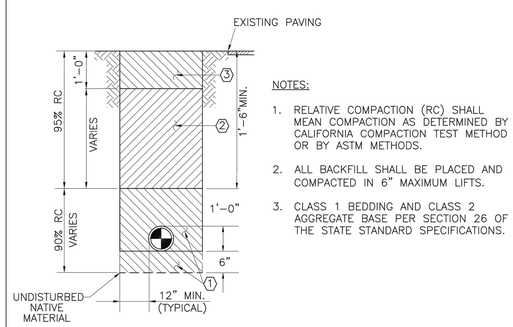

NOTES:

1. RELATIVE COMPACTION (RC) SHALL MEAN COMPACTION AS DETERMINED BY CALIFORNIA COMPACTION TEST METHOD OR BY ASTM METHODS.
2. ALL BACKFILL SHALL BE PLACED AND COMPACTED IN 6" MAXIMUM LIFTS.
3. CLASS 1 BEDDING AND CLASS 2 AGGREGATE BASE PER SECTION 26 OF THE STATE STANDARD SPECIFICATIONS.

LEGEND:

1. CLASS 1 BEDDING (3/4" DRAIN ROCK)
2. NATIVE BACKFILL MATERIAL
3. WITHIN TOWN PATHWAYS, USE 6" STEVENS CREEK QUARRY CRUSHER FINES OVER 6" DRAIN ROCK (1/2") OR EQUAL AS APPROVED BY THE CITY ENGINEER. WITHIN SHOULDERS, USE 12" CLASS 2 AGGREGATE BASE, 3/4" MAXIMUM.

LOS ALTOS HILLS CALIFORNIA	TITLE BACKFILL DETAIL – SHOULDER/EASEMENT		
	ADOPTED BY CITY COUNCIL DATE: 1/13/2011	SCALE: NONE DATE: 1/4/2011 CHK: RC	STANDARD DETAIL UT–2
	26379 FREMONT ROAD, LOS ALTOS HILLS, CA 94022 • Phone: (650) 941–7222		

(B) CITY STANDARD DETAIL

SCALE: (NOT TO SCALE)

Town of Los Altos Hills
Sanitary Sewer Construction Standards

GENERAL NOTES

1. All References to "Town" in these general notes shall mean Town of Los Altos Hills Public Works Department.
2. All sanitary sewer workmanship and materials shall conform to requirements of current Town Standard Details, Construction Standards, and the City Engineer.
3. The approval of these plans by the Town shall be interpreted to mean that the sanitary sewer design shown on these plans meets the Town's Standards. The Town's approval in no way guarantees any other aspect of this plan or its accuracy relative to actual field conditions.
4. The City Engineer is authorized to require modifications during construction.
5. The contractor shall contact the Town at 650-941-7222, two (2) working days in advance of beginning any sanitary sewer work. The contractor shall thereafter keep the Town Inspector informed of his schedule for sanitary sewer work.
6. Prior to commencement of excavation work, the contractor shall contact all utility companies by calling Underground Service Alert (USA) at 1-800-227-2600 at least forty-eight (48) hours prior to start of construction.
7. The contractor shall field verify the location of all utilities before beginning any excavation.
8. The contractor shall obtain any and all permits required by the Town before beginning any sanitary sewer work.
9. Contractor shall obtain encroachment permit prior to any work in the Town right-of-way. A pre-construction meeting is required with the Public Works Department.
10. Applicant shall provide sufficient deposit to the Town for inspection, testing, community outreach, staff time, arborist, traffic consultants, safety specialist and other services as determined by the City Engineer. Any outstanding deposit shall be paid in full prior to final sign off.
11. Sewer connection permits shall be issued by the Town for all proposed new connections.
12. Existing sanitary sewer service shall be maintained at all times. The contractor shall use whatever means necessary (e.g. pumps, bypass lines, etc.) to maintain this service during construction.
13. Prior to commencing any sanitary sewer work in easements, the contractor shall provide the Town with adequate evidence that all affected property owners (and tenants where applicable) were notified forty-eight (48) hours prior to the date of work and that they have updated that notice in a timely manner when those dates have changed.
14. All sanitary sewer work constructed without inspection by the Town shall be removed and reconstructed with inspection.
15. All sanitary sewer laterals shall be 4" PVC-SDR 26 or approved equal, one per lot and marked with the letter 'S' on a post per Town's standards.
16. Sewer mains shall be minimum of 8" PVC-SDR 26 or approved equal and have (a) 1% minimum slope or as approved by the City Engineer, and (b) minimum self-cleaning velocity of 2 feet per second.
17. Sewer laterals shall be a minimum of 4' below top of curb or finished ground at property line unless authorized by the City Engineer.
18. The contractor shall be responsible for verifying the elevation of all existing storm drains and sewers to be extended or connected prior to commencing work.
19. Traffic Control Plan shall be prepared by a licensed Traffic Engineer. Traffic Control Plan shall be in accordance with Town's construction standards and subject to review and approval of the City Engineer prior to permit issuance.
20. Two open traffic lanes are required during all non-working hours. One travel lane may be closed during work hours when flaggers are present.
21. Sewer trenches and permanent pavement within right-of-way and/or easements shall conform to Town's Standard Detail UT-1 and UT-2.
22. The contractor shall place temporary form fitting pieces of plywood or other suitable material over the bottoms of the manholes to prevent entry of foreign materials from the manhole to the pipe.
23. No open trenches in the street right-of-way will be allowed overnight. All trenches shall be backfill the same day the trench was excavated, except that portion of the trench or excavation to be used for connecting the extension of the installation. That said portion shall be adequately barricaded and protected to the satisfaction of the City Engineer or his representative. Excavations or trenches for poured in place concrete manhole may remain open for a period not to exceed seven days, providing said excavation or trenches are adequately barricaded, fenced, and plated with skid resistant steel plate of adequate thickness and flushed with pavement. The number of plates to be utilized each day shall be approved by the City Engineering or his representative.
24. All utility frames and covers, existing and proposed monuments, shall be brought to finish grade after finished paving.
25. 'Tracer Wire' shall be installed along the top of the pipe for all sections of the sewer line. The wire shall be solid copper AWG #10 with an insulated jacket. Detector tape shall also be installed within top 12" of pavement.
26. Sanitary sewer mains shall be flushed, mandreled, air tested, and video taped in accordance with Town's testing and retesting requirements.
27. Contractor shall submit video inspection CD/DVD to the Town for review and approval of the City Engineer prior to acceptance of the sewer main. The Contractor shall be responsible for repairing any defective sections observed in the video inspection to City engineer's satisfaction.
28. In areas where the existing road pavement is trenched for installation of the sewer main, contractor shall restore the pavement per Town of Los Altos Hills Standards. If the trench is more than 300 feet long, the street shall be slurry sealed. In the case where slurry seal is not suitable as determined by the Town, a fee may be required prior to permit issuance.
29. An as-built mylar plan, consists of locations of all sewer main and lateral wyes in the main trunk with reference to manholes, shall be submitted prior to acceptance of the improvements.
30. The Town is not responsible for cleaning private sewer laterals. The property owner is fully responsible for maintenance, repair, and replacement of the (a) lateral from the house to the main including wye connection at the main, (b) overflow, and (c) backflow devices.
31. All works to be done to the satisfaction of the City Engineer.

Town of Los Altos Hills
Sanitary Sewer Construction Standards

TRAFFIC CONTROL

1. The contractor shall provide for safe movement of vehicular, bicycle, equestrian, and pedestrian traffic through and around construction operations. Traffic control requirements set forth herein are the minimum requirements imposed. The contractor shall be solely responsible for providing all protective measures necessary.
2. Traffic Control Plans:
   a. Shall be prepared by a licensed Traffic Engineer to clearly describe proposed traffic control measures for vehicles, bicycles, equestrians, and pedestrians. The plans shall be generally in accordance with the illustration included in the Manual of Traffic Control.
   b. Shall provide a detailed approach for detours and to control traffic through the construction zone,
   c. Shall consist of scaled drawings for each situation anticipated to be encountered, i.e. intersections, mid-block (each during working and non-working hours), etc.
   d. Shall show signs, traffic control devices and flaggers as required.
   e. Shall conform to Caltrans and Town Standards,
   f. Are subject to review and approval of the City Engineer before construction begins.
3. Traffic Control Devices:
   a. General –
      i. Provide traffic control devices in sufficient quantities and types as required to provide safe and adequate traffic control
      ii. During hours of darkness, approved lights and/or flares shall be included, in proper working order, to illuminate signs and hazards and alert approaching traffic.
      iii. Provide and maintain barricades along all open trenches in contact with traffic.
      iv. No work may begin on any day or at any time before traffic control devices have been placed, test driven and, if required, adjusted and revised.
      v. Contractor shall install additional traffic control measures as required by the City Engineer or his representative.
   b. Cones or Delineators –
      i. Cones or Delineators shall consist of cylindrical or cone shaped plastic devices, which shall be 18-inch to 48-inche in height.
      ii. Cones or Delineators shall have a flexible base of suitable weight, which will ensure stability.
      iii. Cones used during hours of darkness shall be internally illuminated or reflectorized meeting the requirements of the Manual of Traffic Controls.
   c. Barricades –
      i. Barricades shall be Type I, Type II or Type III barricades as set forth in the Manual of Traffic Controls.
      ii. Barricades used during hours of darkness shall be equipped with flashers.
   d. Electronic message boards to be placed 14 days prior to start of work.
   e. Placement –
      i. Place all traffic control devices in accordance with the manual of Traffic controls and favorably reviewed Traffic Control Plan.
      ii. Adjust locations of devices to suit the conditions and circumstances of each detour situation. In all cases, place signs to most effectively convey their messages to approaching traffic.
   f. Test Drive of Detour –
      i. Immediately after traffic control devices have been placed, the detour shall be test driven by the Contractor's representative.
      ii. Test drive shall include approach to the detour from each possible direction and traversing full length of each detour route.
      iii. The Contractor shall adjust and revise all traffic control devices as determined to be required by test drive through and shall repeat test drive if determined necessary by the City Engineer.
      iv. The Contractor shall provide additional traffic control devices if required to maintain flow of traffic through construction operation.
   g. Maintenance of Devices –
      i. The Contractor shall maintain all traffic control devices, at proper locations and in proper working order, at all times during construction operation and whenever a hazard resulting from Contractor's operation exists.
      ii. The Contractor shall adjust and revise traffic control devices, placement, etc., to suit changing conditions around construction operations.
   h. Removal of Devices –
      i. Traffic control device shall remain in place at all times required to alert approaching traffic of upcoming hazards.
      ii. After hazard has been removed, remove all traffic control devices. Remove signs or cover their messages.
4. Flaggers:
   a. General –
      i. The Contractor shall employ flaggers as required for each specific detour
      ii. The Contractor shall employ flaggers at all locations on a construction site where barricades and warning signs cannot control the moving traffic.
   b. Placement – where flaggers are required, they shall be logically placed in relation to the equipment or operation so as to give adequate warning and shall be placed approximately 100 feet ahead of impact point.
   c. Warning Signs –
      i. Place a warning sign ahead of the flagger reading: "Flagger Ahead." The distance between the sign and the flagger shall be based on the average traffic speed.
      ii. During hours of darkness, illuminate flagger stations such that the flagger will be clearly visible to approaching traffic. Lights for illuminating the flagger station shall be reviewed and approved by the City Engineer.
   d. Equipment –
      i. Provide flagger with a red or orange warning garment when flagging. Provide flaggers with approved hand signs and two-way radios for communication.
      ii. When flagging during hours of darkness, the flagger shall signal with a red light or flare and shall have a belt and suspender harness outside his garment fitted with reflectors or made from reflectorized cloth, unless the garment is well reflectorized in one of these ways.
5. Access to Private Property
   a. General – the Contractor shall schedule operations to minimize disruption of access to private properties.
   b. Notice to Residents – Prior to blocking access to any private driveway or parking lot entrance, the Contractor shall notify the resident or business owner or tenant of pending closure and allow resident to remove vehicles.
   c. Nights – during non-working hours no driveway, house or parking lot shall be denied access to a public roadway.
6. Notice to Agencies:
   a. The Contractor shall notify in writing all agencies having jurisdiction at least forty-eight (48) hours, excluding holidays and weekends, prior to instituting any lane closure or detour. At the end of each day's work, the Contractor shall inform the ambulance service, police, and fire departments of the status of all detours and/or lane or road closures that will be in effect the next day.
   b. List of Agencies:
      i. Town of Los Altos Hills
      ii. County Fire & Police Department
      iii. U.S. Postal Service
      iv. Ambulance Services
      v. Green Waste Recovery
7. Emergency Vehicle Access Through Detours:
   a. During construction I nor adjacent to roadways in the project site, Contractor shall maintain at least one lane open in each direction of the road to allow emergency vehicle access for police, fire and ambulance to the project vicinity.
   b. During all detours and/or street closures the Contractor shall provide for movement of emergency vehicles through the work area.
   c. It is essential that the Contractor's work and equipment does not impede egress from any fire or police station to other area of their service area.
8. Diverting Traffic:
   a. Diverting Pedestrian, Equestrian, and Bicyclist Traffic:
      i. Whenever construction operations obstruct the flow of pedestrian, equestrian, and/or bicycle traffic or present a hazard to pedestrians, horses, and bicyclists, the Contractor shall take appropriate action to protect and separate them from the work area.
      ii. Such action may include placement of barricades between pedestrians, horses, and bicyclists and work areas, placement of warning signs, and provision of personnel as required to protect pedestrians, horses, cyclists as conditions of warrant.
   b. Diverting Vehicular Traffic:
      i. Whenever construction operations obstruct the flow of vehicular traffic or present a hazard to vehicles operating in the vicinity of construction operations, the Contractor shall take appropriate action to warn, detour and otherwise protect approaching drivers and vehicles.
9. Parking Restrictions:
   a. General – The Contractor shall post approved "No Parking" signs at all location necessary to establish work areas and detour traffic
   b. Signs – signs shall be placed at least 24 hours in advance or restriction.
   c. Contractor shall provide his own staging areas.

PLATING AND TEMPORARY SURFACING

1. Trenches will be covered with plates which shall be flushed with existing pavement and skid resistant.
2. The temporary surfacing shall be Class 2 aggregate base as specified in Section 26 of the Standard Specifications. The aggregate base shall be equal in depth to the existing pavement structural section, but in any case not less than eighteen (18") inches in depth. The aggregate base shall be brought within one (1") inch of the top of the existing paving and covered with temporary "cold mix" asphalt paving using an MC-250, MC-800 or approved equal. All temporary surfacing shall be installed the same day as backfilling and shall be level with the existing paving.

   The Contractor shall maintain the temporary surfacing level with the existing paved surface at all times. All dirt and gravel and debris of any kind shall be removed from Town streets by the end of the day. All temporary asphalt shall comply fully with the Bay Area Air Quality Management District's Regulation 8, Rule 15.

   Section 302 of Rule 15 prohibits the use of "cut back" asphalt (including MC-70) during the months of April through October in paving material or in paving and maintenance operations. The Contractor shall use only slow-cure (SC) liquid asphalts for temporary trench paving during April through October.

   In the event the Contractor does not comply fully with the above requirements, no further excavation will be permitted until the requirements are met.
3. All work shall be done to the satisfaction of the City Engineer.

REV.	DESCRIPTION	BY:	DATE:

REGISTERED PROFESSIONAL ENGINEER DANIEL G. MacLEOD No. 35048 CIVIL STATE OF CALIFORNIA

MacLEOD AND ASSOCIATES
CIVIL ENGINEERING • LAND SURVEYING
965 CENTER STREET • SAN CARLOS • CA 94070 • (650) 593–8580

PREPARED FOR: JENNY WILLIAMS

TOWN'S STANDARD DETAILS AND NOTES

LOS ALTOS HILLS — 13505 BURKE ROAD — SANTA CLARA COUNTY — CALIFORNIA

DRAWN BY:	DJK
DESIGNED BY:	VPG/DJK
CHECKED BY:	DGM
SCALE:	NONE
DATE:	10/08/18
DRAWING NO.	4570–CITY
SHEET	6 OF 6

C-6