Town of Los Altos Hills
Sewer System Management Plan

WDID # 2SSO10149

Prepared by RMC Water and Environment (2006~2008)
Revision #1 by staff: 2009
Revision #2 by staff: 2012
Revision #3 by staff: 2013
Revision #4 by V. W. Housen & Associates: 2016
Revision #5 by staff: 2019

Original Council Adoption Date:	January 24, 2013
Original Prepared by:	RMC Water and Environment
City Council Readopted Date:	May 19, 2016
Resolution Number:	24-16

TABLE OF CONTENTS

ELEMENT 1: GOALS **1-1**
1.1 Regulatory Requirements for Goals Element 1-1
SWRCB Requirement *1-1*
1.2 Element 1 – Appendix 1-1
1.3 Goals 1-1
ELEMENT 2: ORGANIZATION **2-1**
2.1 Regulatory Requirements for Organization Element 2-1
SWRCB Requirement *2-1*
2.2 Element 2 – Appendix A 2-1
2.3 Organization 2-1
Department Organization *2-1*
General Responsibilities *2-2*
Legally Responsible Official (LRO) - Data Submitter *2-4*
Responsibility for SSMP Implementation *2-4*
2.4 SSO Reporting Chain of Communication 2-5
SSO Response Chain of Communication *2-6*
ELEMENT 3: LEGAL AUTHORITY **3-1**
3.1 Regulatory Requirements for Legal Authority Element 3-1
SWRCB Requirement *3-1*
3.2 Element 3 – Appendix B 3-1
3.3 Legal Authority 3-1
Prevention of Illicit Discharges *3-2*
Proper Design and Construction of Sewers and Connections *3-3*
Access for Maintenance, Inspection, or Repair of Laterals *3-3*
Limit Discharge of Fats, Oils, and Grease *3-3*
Enforcement of Violations *3-4*
3.4 Agreements with Other Agencies 3-4
ELEMENT 4: OPERATION & MAINTENANCE PROGRAM **4-1**
4.1 Regulatory Requirements for Measures and Activities 4-1
SWRCB Requirement *4-1*
4.2 Element 4 – Appendix C 4-2
4.3 Collection System Map 4-2
4.4 Operations and Maintenance Resources and Budget 4-4
4.5 Routine Preventive Operation and Maintenance 4-4
4.6 Rehabilitation and Replacement Plan 4-6
4.7 Scheduled Inspections and Condition Assessment 4-7
Manhole Inspection *4-7*
Pump Station Inspections and Assessment *4-8*
4.8 Training 4-8
4.9 Contingency Equipment and Replacement Inventories 4-8
ELEMENT 5: DESIGN & PERFORMANCE PROVISIONS **5-1**
5.1 Regulatory Requirements for Design & Construction Standards 5-1
SWRCB Requirement *5-1*
5.2 Element 5 – Appendix D 5-1

5.3 Design & Construction Standards 5-1

ELEMENT 6: OVERFLOW EMERGENCY RESPONSE PLAN (OERP) 6-1

6.1 Regulatory Requirements for OERP 6-1

SWRCB Requirement 6-1

6.2 Element 6 – Appendix E 6-1

6.3 Overflow Emergency Response Plan 6-2

Overflow Response Responsibilities 6-2

Overflow Emergency Response Plan Sections 6-2

6.4 Notification, Reporting, Monitoring, and Record Keeping Requirements 6-3

6.5 Water Quality Monitoring Plan 6-5

6.6 SSO Technical Report 6-5

6.7 SSO Response Training 6-6

Initial and Annual Refresher Training 6-6

SSO Response Drills 6-7

SSO Training and Record Keeping 6-7

Contractors Working on Town Sewer Facilities 6-7

ELEMENT 7: FOG CONTROL PROGRAM 7-1

7.1 Regulatory Requirements for FOG Control Element 7-1

SWRCB Requirement 7-1

7.2 Element 7 – Appendix F 7-1

7.3 FOG Control Program 7-2

7.4 FOG Control Activities 7-2

Hot Spot Identification and Cleaning 7-2

Public Outreach 7-2

Legal Authority 7-3

Identification of FOG Issues 7-4

ELEMENT 8: SYSTEM EVALUATION & CAPACITY ASSURANCE PLAN 8-1

8.1 Regulatory Requirements for Capacity Management 8-1

SWRCB Requirement 8-1

8.2 Element 8 – Appendix G 8-1

8.3 Capacity Evaluation 8-1

Flow Monitoring Study 8-2

ELEMENT 9: MONITORING, MEASUREMENT, & PROGRAM MODIFICATIONS 9-1

9.1 Regulatory Requirements for Monitoring, Measurement, and Program Modifications 9-1

SWRCB Requirement 9-1

9.2 Element 9 – Appendix H 9-1

9.3 Monitoring and Measurement 9-1

9.4 SSO Trends 9-3

9.5 SSMP Modifications 9-5

ELEMENT 10: SSMP AUDITS 10-1

10.1 Regulatory Requirements for SSMP Audits 10-1

SWRCB Requirement 10-1

10.2 Element 10 – Appendix I 10-1

10.3 SSMP Audits 10-1
ELEMENT 11: COMMUNICATION PROGRAM 11-1
11.1 Regulatory Requirements for Communication Program 11-1
SWRCB Requirement 11-1
11.2 Element 11 – Appendix J 11-1
11.3 Communication Program 11-1

List of Tables

Table I-1: Summary of Pump Station Information 2
Table 2-1. SSMP Responsible Staff 2-5
Table 3-1: Municipal Code related to State WDR 3-2
Table 4-1: West Bay Proposed Cleaning Plan 4-5
Table 6-1: Notification, Reporting, Monitoring, and Record Keeping 6-4
Table 8-1: Flow Metering Locations 8-3
Table 9-1. SSMP Monitoring Parameters, by SSMP Element 9-2
Table 9-2. SSO Trends 9-3
Table 9-3: SSO by Cause 9-4

List of Figures

Figure I-1. Town of Los Altos Hills Service Area Map 3
Figure 2-1. Organization Chart of Town Sewer-Related Staff 2-2
Figure 2-2. West Bay Organizational Chart 2-2
Figure 2-3. SSO Response Typical Chain of Communication 2-27
Figure 4-1: Town Grid Map Book 4-3
Figure 9-1. SSO Trends 9-4
Figure 9-2: SSOs by Cause 9-5

Appendices

Appendix A Element 2 Supporting Documents (Organization)
Appendix B Element 3 Supporting Documents (Legal Authority)
Appendix C Element 4 Supporting Documents (Operation & Maintenance Program)
Appendix D Element 5 Supporting Documents (Design & Performance Provisions)
Appendix E Element 6 Supporting Documents (Overflow Emergency Response Plan)
Appendix F Element 7 Supporting Documents (FOG Control Program)
Appendix G Element 8 Supporting Documents (Systems Evaluation & Capacity Assurance Plan)
Appendix H Element 9 Supporting Documents (MMRM)
Appendix I Element 10 Supporting Documents (SSMP Audits)
Appendix J Element 11 Supporting Documents (Communication Plan)

List of Abbreviations

ADWF	Average Dry Weather Flow
BACWA	Bay Area Clean Water Agencies
BAPPG	Bay Area Pollution Prevention Group
BMP	Best Management Practice
BOD	Biological Oxygen Demand
BSF	Base Sanitary Flow
CAD	Computer Aided Drafting
CCTV	Close-Circuit Television
CIP	Capital Improvement Plan
CMMS	Computerized Maintenance Management System
COD	Chemical Oxygen Demand
CWEA	California Water Environment Association
CIWQS	California Integrated Water Quality System
DIP	Ductile iron pipe
DWF	Dry Weather Flow
EXEC	Executive Order
FOG	fats, oils, and grease
GIS	Geographical Information System
GWDR	General Waste Discharge Requirements
GWT	Groundwater Infiltration
HDPE	High-density polyethylene
HP	Horsepower
I/I	Inflow and Infiltration
LRO	Legally Responsible Official
MMRM	Monitoring, Measurement, & Program Modifications
MRP	Municipal Regional Permit
NASSCO	National Association of Sewer Service Companies
NPDES	National Pollutant Discharge Elimination System
OERP	Overflow Emergency Response Plan
OES	Office of Emergency Services
PACP	Pipeline Assessment and Certification Program
PVC	Polyvinyl chloride

PW	Public Works
PWWF	Peak Wet Weather Flow
ROW	Right-of-Way
RWQCB	Regional Water Quality Control Board, San Francisco Region
SORP	Sanitary Sewer Overflow Response Plan
SSMP	Sanitary Sewer System Management Plan
SSO	sewer system overflow
SWRCB	State Water Resources Control Board
Town	Town of Los Altos Hills
VCP	Vitrified Clay Pipe
VWHA	V.W. Housen & Associates
WDR	Waste Discharge Requirements
WDID	Waste Discharge Identification Number
West Bay	West Bay Sanitary District
WWF	Wet Weather Flow

INTRODUCTION

This introductory section provides background information on the purpose and organization of the Sewer System Management Plan (SSMP), as well as a brief overview of the Town's service area and sewer system.

SSMP Background

On May 2, 2006, the State Water Resources Quality Control Board (SWRCB) issued a directive through Order No. 2006-0003-DWQ to require all public wastewater collection system agencies in California with greater than one mile of sewers to be regulated under General Waste Discharge Requirements (Statewide WDR). In July 2013, portions of this Order related to monitoring and reporting were amended by Order No. 2013-0058-EXEC (Amended MRP). The SWRCB action also mandates the development of an SSMP and the reporting of SSOs using an electronic reporting system.

As of February 2016, the Town is in the process of redesigning its website and will make the SSMP available on the website once this process is completed. The Town's waste discharge identification number (WDID) in the California Integrated Water Quality System (CWIQS) is 2SSO10149.

Document Organization

This SSMP is intended to meet the requirements the Statewide WDR and Amended MRP. The SSMP includes eleven elements, as listed below. Each of these elements forms a section of this document.

1. Goals
2. Organization
3. Legal Authority
4. Operation and Maintenance Program
5. Design and Performance Standards
6. Overflow Emergency Response Plan
7. Fats, Oils, and Grease (FOG) Control Program
8. System Evaluation and Capacity Assurance Plan
9. Monitoring, Measurement, and Program Modifications
10. SSMP Program Audits
11. Communication Program

Each element section is organized into sub-sections, as follows:

1. Description of SWRCB requirement for that element,
2. Identification of associated Appendix and list of supporting information included in the Appendix. Information expected to require relatively frequent updates (such as names and phone numbers of staff), as well as other supporting information, such as forms or schedules, are included in the Appendix.
3. Discussion of the respective topic.

Town Service Area and Sewer System

The Town of Los Altos Hills (Town) covers an 8.4 square mile area in Santa Clara County adjacent to the City of Los Altos and the City of Palo Alto. The Town is primarily residential, with a population of approximately 8,000, comprising 1,750 residential and eight non-residential connections. The Town has a minimum parcel size of one acre. Approximately half of the Town's properties are served by the sanitary sewer system; the remainder parcels are on septic tanks. An additional 5.8 square miles of unincorporated land adjacent to the Town's boundaries have been designated by the County of Santa Clara as being within the Town's Sphere of Influence, and may be subject to the Town's guidelines for annexation.

The Town's sewer system consists of approximately 56 miles of pipe including approximately 1,800 feet of force main. Pipe diameters range from 6 to 10 inches, with the majority (approximately 80% by length) being 6 inches in diameter. There are 1,684 manholes and junctions (defined as a convergence of 2 or more sewer pipes) and 91 cleanouts owned by the Town. The system includes two pump stations owned and maintained by the Town (Purissima and O'Keefe lift stations), as well as several privately-owned and maintained lift stations. Table I-1 summarizes information for both lift stations owned by the Town. Collected sewage is conveyed via the City of Palo Alto or the City of Los Altos sewer systems to the Palo Alto Regional Water Quality Control Plant for treatment.

Table I-1: Summary of Pump Station Information

Pump Station	Parameter	Information
Purissima	Address	28002 Purissima Road
	# of pumps	4 total: 2 at dry pits , 2 at wet wells
	Model / Horsepower	Flygt 3152 @ 23HP(dry pit), Flygt 3153 @ 23HP (wet well)
	Avg run time	0.76 hour per day
O'Keefe	Address	O'Keefe at Dover Court
	# of pumps	2 total at wet wells
	Model / Horsepower	Flygt 3085 @ 3 HP
	Avg run time	1.26 hours per day

Two sewer basins in the southern portion of the system flow to the City of Los Altos, whereas the northern portion of the system flows to the City of Palo Alto. Since August 2014, the system has been maintained by a private contractor, West Bay Sanitary District (West Bay). For several years prior to this time, the system was maintained by Veolia Water.

West Bay assists the Town in sewer operations, maintenance, and emergency response. The Town, via West Bay, owns and maintains the public sewer main lines and force mains in the collection system while private homeowners are responsible for their own laterals between the building and the mainline connection. Additionally, the 12-inch trunk sewers within the Palo Alto Basin are owned and maintained by the City of Palo Alto.

Figure I-1 on the following page shows the Town boundary, which also comprises the Town's collection system area.

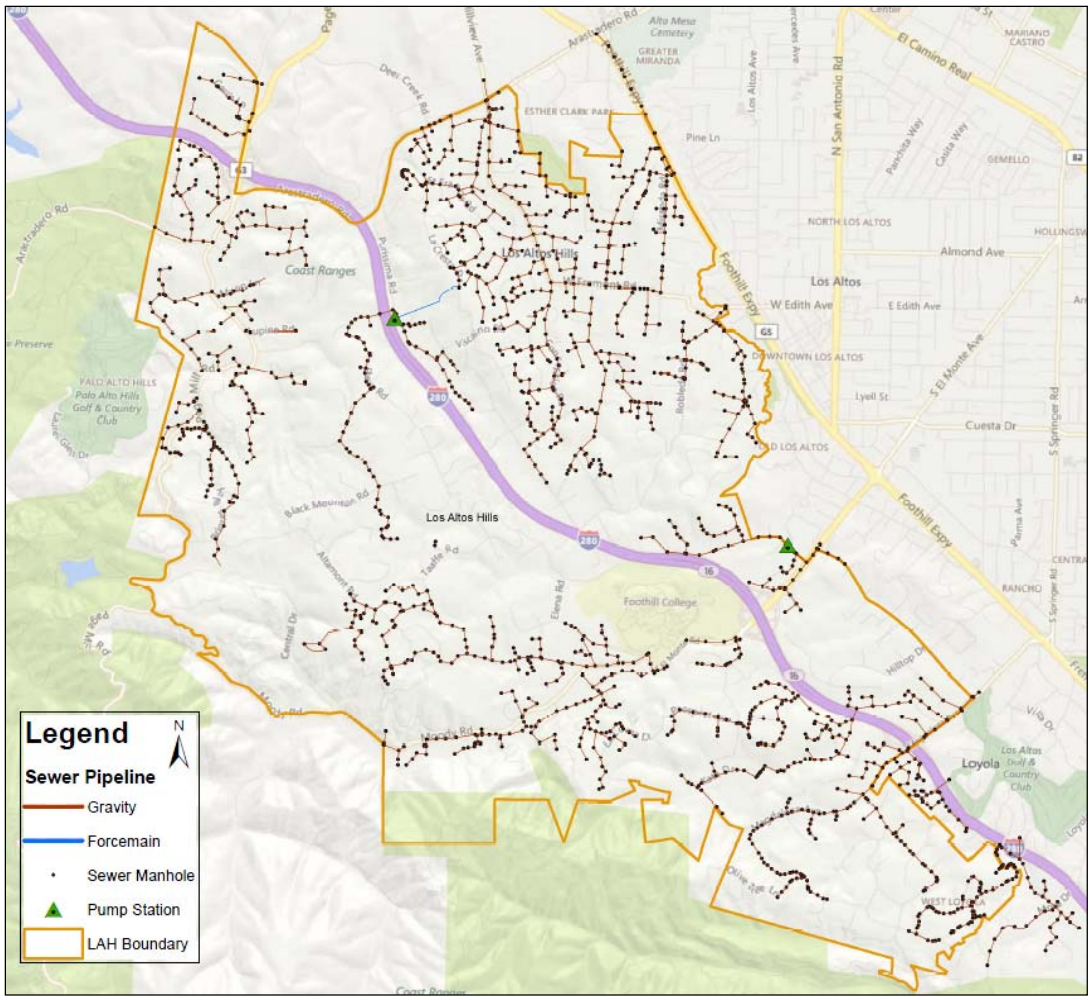

Figure I-1. Town of Los Altos Hills Service Area Map

Table I-1 identifies the objectives that must be addressed to comply with each SSMP element.

Table I-2. SSMP Objectives

Element	Objective
Goals	• Properly manage, operate and maintain the collection system • Provide capacity to convey base and peak flows • Minimize the frequency and severity of SSOs • Mitigate the impact of SSOs
Organization	• Identify agency staff responsible for the SSMP • Identify chain of communication for responding to and reporting SSOs
Legal Authority	• Control I/I from the collection system and laterals • Require proper design and construction of sewers and connections • Require proper sewer installation, testing and inspection • Ability to impose source control requirements
Operation and Maintenance Program	• Maintain up-to-date maps • Allocate adequate resources for system operation and maintenance • Prioritize preventative maintenance activities • Identify critical equipment and spare parts to minimize equipment and/or facility downtime • Provide staff training on a regular basis
Design & Construction Standards	• Identify minimum design and construction standards and specifications • Identify procedures and standards for inspecting and testing
Overflow Emergency Response Plan (OERP)	• Provide SSO notification procedures • Develop and implement a plan to respond to SSOs • Develop procedures to report and notify SSOs • Develop procedures to prevent overflows from reaching surface waters, and to minimize or correct any adverse impact from SSOs
FOG Control Program	• Develop a Fats, Oil and Grease (FOG) control plan, if needed
System Evaluation and Capacity Assurance	• Establish a process to access the current and future capacity requirements • Implement a capital improvement plan to provide hydraulic capacity
Monitoring, Measurement and Program Modifications	• Measure the effectiveness of each SSMP element • Monitor each SSMP element and make updates as necessary
SSMP Audits	• Conduct a bi-annual audit that includes deficiencies and steps to correct them
Communication Program	• Communicate with public (Customers) on SSMP development, implementation and performance and create a plan for communication with tributary/satellite sewer systems

Element 1: GOALS

This SSMP element identifies goals the Town has set for the management, operation and maintenance of the sewer system and discusses the role of the SSMP in supporting these goals. These goals provide focus for Town staff and its contractor in improving the management of the Town's wastewater collection system.

1.1 Regulatory Requirements for Goals Element

The SWRCB requirement for the Goals element of the SSMP is as follows:

SWRCB Requirement

The collection system agency must develop goals to properly manage, operate, and maintain all parts of its wastewater collection system in order to reduce and prevent SSOs, as well as to mitigate any SSOs that occur.

1.2 Element 1 – Appendix

There is no appendix associated with Element 1.

1.3 Goals

This SSMP contributes to the proper management of the collection system and assists the Town in minimizing the frequency and impacts of SSOs through appropriate maintenance and emergency response. Specific goals of the Town's SSMP are as follows:

1. To minimize the frequency of SSOs.
2. To mitigate impacts associated with SSOs.
3. To effectively coordinate with contractors to provide efficient and effective SSO response.
4. To effectively coordinate with contractors to properly manage, operate, maintain all portions of the Town's wastewater collection system.
5. To provide adequate capacity to convey peak wastewater flows within the Town service area.
6. To plan for the appropriate renewal and replacement of wastewater collection system facilities to maintain their long-term structural integrity and reliability.
7. To respond quickly and respectfully to public notifications of SSOs or other collection system problems.
8. To provide a safe working environment for Town employees.
9. To meet all applicable regulatory notification and reporting requirements.

Element 2:
ORGANIZATION

This section of the SSMP describes the organization of Town staff and contractors responsible for sewer-related work, including staff responsible for implementing this SSMP, responding to SSO events, and meeting the SSO reporting requirements. This section also includes the designation of the Legally Responsible Official.

2.1 Regulatory Requirements for Organization Element

The SWRCB requirements for the Organization element of the SSMP are as follows:

SWRCB Requirement

The collection system agency's SSMP must identify:

1. The name of the responsible or authorized representative;
2. The names and telephone numbers for management, administrative, and maintenance positions responsible for implementing specific measures in the SSMP program. Include lines of authority as shown in an organization chart or similar document with a narrative explanation; and
3. The chain of communication for reporting SSOs, from receipt of a complaint or other information, including the person responsible for reporting SSOs to the State and Regional Water Board and other agencies if applicable (such as California Office of Emergency Services (Cal-OES), County Health Officer, and County Environmental Health Agency).

2.2 Element 2 – Appendix A

Supporting information for Element 2 is included in Appendix A. This appendix includes the following documents:

1. Table of sewer staff names and phone numbers (update as needed).
2. Contact numbers for the SSO Chain of Communication (update as needed)

2.3 Organization

This section discusses the organization, general responsibilities, and roles of sewer staff, the Legally Responsible Official, and key staff responsible for implementing and maintaining the SSMP.

Department Organization

The organization chart for the management, operation, and maintenance of the Town's wastewater collection system is shown on Figure 2-1. The names and phone numbers of staff currently filling these positions are included in Appendix A, Table 1. The Town also maintains a current list of all staff positions, names, and contact information on its website at http://www.losaltoshills.ca.gov/engineering.

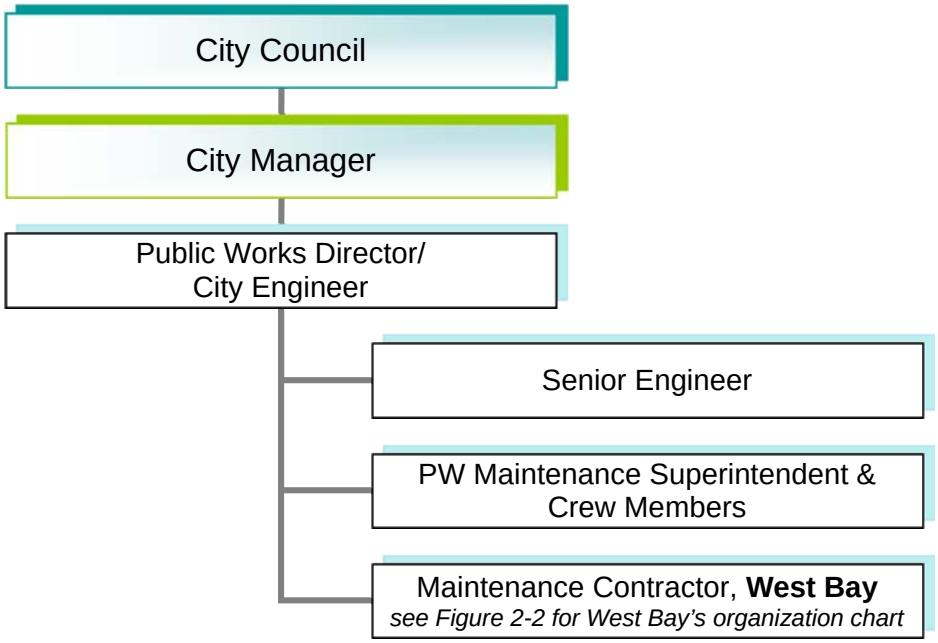

Figure 2-1. Organization Chart of Town Sewer-Related Staff

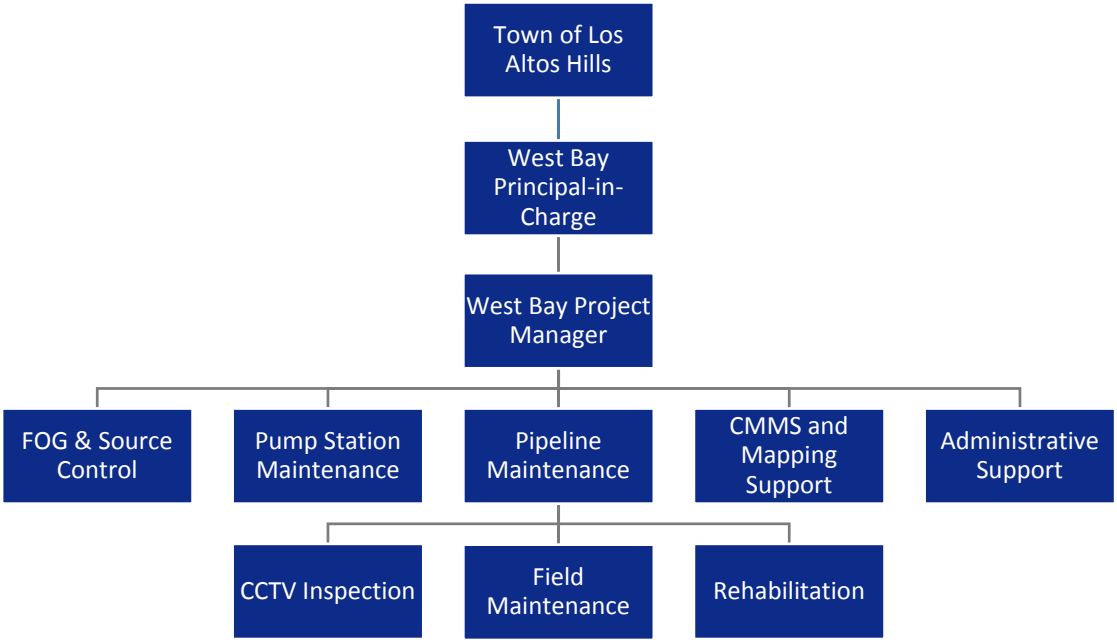

Figure 2-2. West Bay Organization Chart

General Responsibilities

Los Altos Hills

City Manager. Provides overall day-to-day administration of Town operations and services and implementation of Council policies.

Public Works Director/City Engineer. Oversees the Engineering Department, administers public improvement and maintenance projects and services, oversees Public Works maintenance, directs master planning studies, and manage Town Crew and Maintenance Contractor. Also serves as the Town's Legally Responsible Official (LRO).

Senior Engineer. Designs, coordinates and reviews capital improvement program projects, reports sewer overflow incidents for regulatory compliance, performs engineering-related tasks, manages City Engineering records, and coordinates with Town Crew and Maintenance Contractor. The Senior Engineer is authorized to submit SSO reports to the appropriate government agencies.

PW Maintenance Superintendent. In addition to general maintenance throughout the Town, serves as the on-call person for major after-hours emergencies.

Maintenance Contractor (West Bay). Provides sewer system maintenance for sewer main lines and pump stations, and provides emergency response services within Town sewer system.

West Bay Sanitary District

Principal in Charge. Provides general manager expertise in all aspects of West Bay's services to the Town.

Project Manager. Manages day-to-day Operation and Maintenance activities, including cleaning, CCTV inspection, root control as desired by the Town, and as needed oversight of construction and rehabilitation activities. The project manager also manages the team, budget, equipment, and emergency response.

Pipeline Maintenance Lead. Leads the field maintenance team, including cleaning, rehabilitation, and field response. Provides support to the project manager and serves as the acting Maintenance Superintendent when the project manager is not available for routine or emergency response.

Pump Station Specialist. Leads the Town's pump station maintenance activities.

CMMS and Mapping Manager. Provides database, mapping, and CMMS database support for the project.

FOG & Source Control Specialist. Serves as the regulatory compliance officer and safety officer. This person will provides assistance to the team in managing FOG control within the collection system as required.

Pipeline Maintenance Crew. Responsible for routine preventive maintenance operations. The maintenance crew conducts cleaning, CCTV, and rehabilitation operations within the Town's system. All West Bay CCTV field staff are California Water Environment

Association (CWEA) and National Association of Sewer System Companies (NASSCO) Pipeline Assessment Certification Program (PACP) certified.

Legally Responsible Official (LRO) - Data Submitter

The Town's LRO in all wastewater collection system matters is the Public Works Director. The Public Works Director is authorized to certify electronic spill reports submitted to the SWRCB.

The Town's Senior Engineer serves as the backup LRO, and is authorized to submit SSO reports to the appropriate government agencies.

Responsibility for SSMP Implementation

The Town's Public Works (PW) Director is responsible for the overall implementation and update of this SSMP. The Public Works Director is supported by the Senior Engineer.

Table 2-1 lists the staff person that is responsible for implementation of each of the SSMP Elements.

Table 2-1. SSMP Responsible Staff

SSMP Element	Responsible Position
Goals	• The PW Director leads Town staff and contractor in the implementation of the Town's goals.
Organization	• The PW Director recommends updates related to the Division of organizational structure. City Council approves any organizational changes.
Legal Authority	• The PW Director upholds the Town Ordinance.
Operations & Maintenance	• The PW Director/Town Senior Engineer manages the Town's sewer-related resources and budget. The Senior Engineer, under direction of the PW Director, coordinates with the contractor on collection system maintenance operations.
Design and Construction Standards	• The Senior Engineer reviews design and construction documents to ensure that all construction projects meet the Town's standards, and also updates standards for installation, rehabilitation and repair, as needed. The Senior Engineer manages the inspection of all construction projects to ensure the Town's construction standards have been followed.
Overflow Emergency Response Plan	• The Senior Engineer maintains the Overflow Emergency Response Plan. The contractor implements the plan, makes revisions, and oversees regular training for maintenance crew members.
FOG Control Program	• The Senior Engineer provides oversight to the contractor, who identifies grease hot spots and maintains an effective cleaning program for grease problem sewers. In addition, the contractor enforces discharge regulations, as needed.
System Evaluation and Capacity Assurance	• The City Engineer establishes and assesses capacity requirements for the Town's collection system and manages preparation and implementation of the Town's System Evaluation and Capacity Assurance Plan. The PW Director together with the Senior Engineer develops long-term Capital Improvement Plan including updating budgets and schedules.
Monitoring, Measurement and Program Modifications	• The PW Director monitors implementation and assesses success of the overall SSMP program elements.
SSMP Audits	• The PW Director with the assistance of the Senior Engineer performs biennial audit of the sections of the SSMP.
Communication Plan	• The City Council, City Manager, PW Director, and Senior Engineer communicate with the public and nearby agencies of the Town's SSMP.

2.4 SSO Reporting Chain of Communication

Figure 2-3 contains a flowchart depicting the overall chain of communication for responding to and reporting SSOs, from observation of an SSO to reporting the SSO to

the SWQCB. Document 2 in Appendix A contains contact numbers for all entities included in the SSO reporting chain of communication. The SSO Reporting process is described in more detail in Element 6: Overflow Emergency Response Plan.

SSO Response Chain of Communication

A public observer of an SSO would typically call the Town Hall. During regular business hours, the Town Hall receptionist forwards the call to the Town Senior Engineer. The Senior Engineer determines the location of the SSO and then calls the appropriate agency or contractor for response, cleanup, and containment. If the SSO occurred on a main owned by the City of Palo Alto, Palo Alto responds and reports the overflow. Otherwise, after containment and cleanup, the contractor reports back to the Town Senior Engineer, and the Senior Engineer notifies the Public Works Director and appropriate regulatory agencies.

After hours, the Town Hall message directs callers to County Communications. County Communications attempts to determine the appropriate agency or contractor to call for response. If they are unsure, they generally contact Public Works Director and/or Maintenance Superintendent who informs them of the correct responder to call.

Town SSOs are typically small volume (most less than 100 gallons) with little potential for human health impacts or impact to surface water. If an SSO of more than 1,000 gallons were to occur after hours, County Communications would contact the Town's Public Works Director and/or Maintenance Superintendent, who serves as the after-hours on-call personnel for all major emergencies. The Public Works Director and/or Maintenance Superintendent would then contact the appropriate response agencies and the contractor as well as the Senior Engineer.

If the contractor determines that a sewer repair is needed to correct the overflow, the Town Senior Engineer contacts an emergency sewer repair contractor (see Appendix A, Table 2).

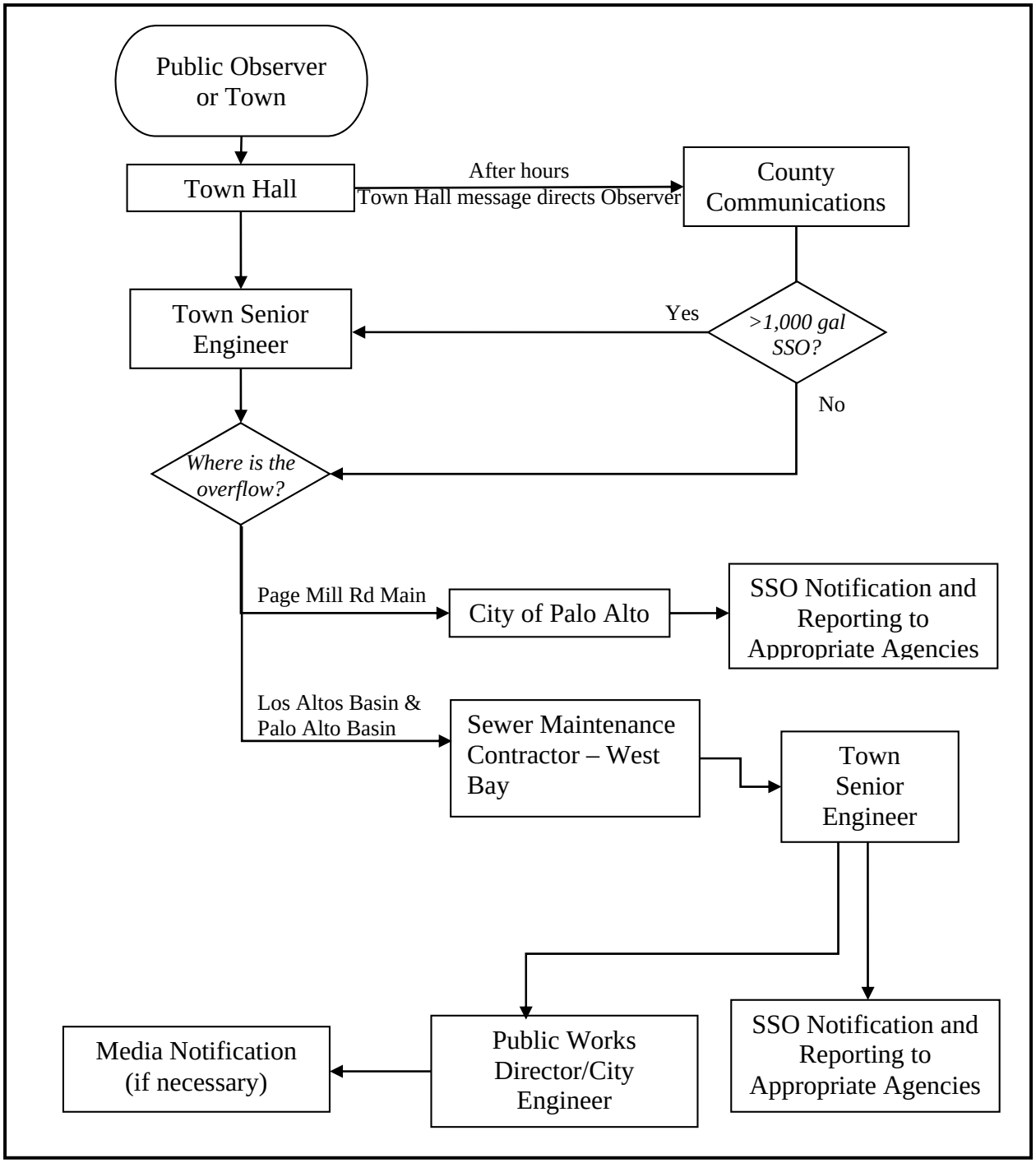

Figure 2-3. SSO Response Typical Chain of Communication

Element 3:
LEGAL AUTHORITY

This element of the SSMP discusses the Town's Legal Authority, including its Municipal Code and agreements with other agencies.

3.1 Regulatory Requirements for Legal Authority Element

The SWRCB requirements for the Legal Authority element of the SSMP are summarized below:

SWRCB Requirement

The Town must demonstrate, through collection system use ordinances, service agreements, or other legally binding procedures, that it possesses the necessary legal authority to:

(a) Prevent illicit discharges into its wastewater collection system (examples may include infiltration and inflow (I/I), storm water, chemical dumping, unauthorized debris and cut roots, etc.);

(b) Require that sewers and connections be properly designed and constructed;

(c) Ensure access for maintenance, inspection, or repairs for portions of the lateral owned or maintained by the Public Agency;

(d) Limit the discharge of fats, oils, and grease and other debris that may cause blockages, and

(e) Enforce any violation of its sewer ordinances.

3.2 Element 3 – Appendix B

Supporting information for Element 3 is included in Appendix B. This appendix includes the following documents:

1. Ordinance No. 440 (version of Municipal Code Title 6, Chapter 4, Article 4 (Sewer Use Code) that was adopted by the City Council on September 15, 2005).
2. City of Palo Alto and City of Los Altos discharge agreement.
3. 2014 West Bay Sanitary Sewer System maintenance contract and 2015 amendment.

3.3 Legal Authority

The legal authority required for the SSMP is contained within the Town's municipal code. Chapter 4 (Sewage) of Title 6 (Sanitation and Health) of the municipal code is dedicated to sewage disposal, including the public sewage collection system. This chapter is divided into 5 Articles, as follows:

- Article 1. Sewage Disposal

- Article 2. Sewer Connection and Service Charges
- Article 3. Use of Tax Roll
- Article 4. Sewer Use
- Article 5. Sewer Improvement Reimbursement

Article 4 as listed above pertains to the legal authority required for fulfillment of SSMP requirements. This article is included in full in Appendix B. Portions of this article are discussed in the following sub-sections as they pertain to prevention of illicit discharges, proper design and construction of sewer and connections, maintenance access, and enforcement measures.

Table 3-1: Municipal Code Related to State WDR

Municipal Code Section	Requirement
Prevention of Illicit Discharges	6-4.403, 6-4.405, 6-4.408, 6-4.410, 6-4.414, 6-4.415, and 6-4.421-424
Proper Design and Construction of Sewers and Connections	6-4.430, 6-4.434, 6-4.437, 6-4.439, 6-4.442-443, and 6-4.446
Access for Maintenance, Inspection, or Repair of Laterals	6-4.443(7-8) and 6-4.428
Limit Discharge of Fats, Oils, and Grease	6-4.425
Enforcement of Violations	6-4.406, 6-4.418, Title 1, Chapter 2 (Code Compliance – Judicial and Administrative Remedies), and Title 6, Chapter 4 (Nuisance Abatement)

Prevention of Illicit Discharges

Article 4 includes measures prohibiting illicit discharges. Examples of discharges covered are included below. Refer to the municipal code included in Appendix B for the complete text.

- Industrial Waste. Section 6-4.403 requires a permit for discharging any industrial wastes directly or indirectly into the sewer system. The permit issued may require pretreatment or include other provisions for wastewater quality and quantity. Additional regulations (Sec. 6-4.405 and Sec. 6-4.408) require communication of requirements to personnel and authorize the City Engineer or representative to enter and inspect any industrial waste producing facility.
- Prohibited Discharge. Section 6-4.410 prohibits discharge of any substances directly into a manhole or other opening in a Town sewer, other than through an approved building sewer.
- Prohibited Effect. Section 6-4.414 prohibits any waste discharge that results in certain effects, including but not limited to endangering public health and safety, causing damage to the sewer system, or creating a nuisance.
- Character of Wastes. Section 6-4.415 prohibits discharge of wastes that exceed specified standards. This section addresses BOD; COD; dyes; explosives; grease

and oil; pH; noxious, hazardous, or malodorous substances; organic solvents; radioactivity; solids; stored liquid wastes; stormwater; temperature; and toxicity.

- Other Chemicals. Sections 6-4.421 through 423 provide requirements for photographic materials processing, dental facilities using silver amalgams, and copper-based root control chemicals.
- Grease Disposal. Section 6-4.424 prohibits grease disposal.

Proper Design and Construction of Sewers and Connections

Regulations pertaining to sewer connections and the design, construction, and inspection of private sewers, building sewers, and connections are included in Sections 6-4.430 through 6-4.446 of Article 4. Brief descriptions of requirements in the article are included below. Additional information on design and construction standards is included under Element 5 of this SSMP.

- License. Section 6-4.430 requires a sewer contractor business license issued by the Town before installing sewers.
- Permit. Section 6-4.434 requires a construction permit before connecting to a public sewer.
- Inspection. Section 6-4.437 requires all work to be inspected. The City Engineer is to inspect all pipes, fittings and other appurtenances relative to the sewer system to insure compliance to requirements.
- Tests. Section 6-4.439 allows for the City Engineer to test new house sewers, including a water test or video inspection. This section also sets testing guidelines.
- Materials. Section 6-4.442 and subsections set minimum standards for materials and fittings used in sewer system construction.
- Design Requirements. Section 6-5.443 and subsections specify design requirements for building sewers. Section 6-4.446 and sub-sections requires plans and specifications for sewer main extension to be approved by City Engineer and sets a minimum sewer main diameter.

Access for Maintenance, Inspection, or Repair of Laterals

No portion of the lateral is maintained by the Town, pursuant to Section 6-4.443(7) of the municipal code. Section 6-4.443(8) specifies requirements for cleanouts.

Should a problem on a private lateral become a public nuisance due to non-response by the lateral owner, Section 6-4.428 provides the Town authority to abate or correct the public nuisance.

Limit Discharge of Fats, Oils, and Grease

As discussed under Element 4, FOG Control, Section 6-4.425 of the Town's municipal code requires a grease removal device for every commercial or industrial generator of grease, as of 1997. This section also requires the business to clean out the grease

removal device at least every six months and to keep a log of all grease removal cleaning. The log must be available for inspection for a 3-year period.

Enforcement of Violations

Enforcement measures available to the Town include revocation of permits, civil penalty fines, declaration and abatement of a public nuisance, as follows:

- Title 6, Chapter 4 (Sewage). Section 6-4.406 allows for suspension or revocation of industrial wastes discharge permit.
- Title 6, Chapter 4 (Sewerage). Section 6-4.418 allows for civil penalty fines up to $6,000 per day for intentionally or negligently violating any provision of Article 4 (Sewer Use). Civil penalties assessed pursuant to this code section are in addition to penalty provisions allowed in Title 1, Chapter 2 (Code Compliance – Judicial and Administrative Remedies).
- Title 1, Chapter 2 (Code Compliance – Judicial and Administrative Remedies). The Town may issue a notice of code violations that states the specific violation and remedies that need to be taken, time allowed for correction, and penalties if violation is not correct. This Chapter also allows for the Town's recovery of compliance costs, declaration of a public nuisance, and issuance of a misdemeanor charge.
- Title 6, Chapter 4 (Nuisance Abatement). If a public nuisance is declared, the Town can give a notice of abatement. If there is no response or corrective action taken, this Chapter allows for entry of Town personnel or private contractors onto private property to abate the nuisance. If the property owner fails to pay the costs of abatement, the Town may record a Notice of Abatement Lien on the property.

3.4 Agreements with Other Agencies

As noted in Section 3.3 above, the SSMP requirements for legal authority are fulfilled by the Town's municipal code. However, the Town does have additional legal agreements with the City of Palo Alto and the City of Los Altos to allow discharge of Town flow into the City systems. These agreements are noted here for reference:

- City of Palo Alto Agreement (1968). This agreement gives the Town the right to connect to the City of Palo Alto system at certain points in order to discharge flow from specified areas. This agreement has been amended several times to add additional parcels to the allowed area. This agreement restricts discharge from Town based on average dry weather flow and peak wet weather flow.

- City of Los Altos Agreement (1985). This agreement gives the Town the right to discharge flow to City of Los Altos sewer lines. Discharge rights are based on the number of residential units connected. This agreement also defines ownership of certain lines that are located within the Town but owned by the City (such as the line serving Foothill College). This agreement also covers maintenance and

emergency response services provided by the City for Town sewers but is subsequently amended by the revised agreement entered in 2007.

A revised agreement between the Town and the City of Los Altos was entered in 2007 to transfer maintenance responsibility for any liability associated with the additional capacity rights acquired in the Town. In addition, further define ownership of certain mainlines responsibilities and additional improvements required for sewer conveyance through City of Los Altos sewer system.

In addition, in 2014, the Town entered into a contract with West Bay to provide maintenance to its sanitary sewer collection system. In 2015, the Town adopted an amended agreement that extended the original one-year contract by three additional years. Under this contract, West Bay performs the following tasks:

1. Pump Station Operation & Maintenance
2. Sewer Cleaning
3. CCTV Inspection and Manhole Inspection
4. SSO response
5. Initial set-up and database transfer for CMMS and GIS Systems
6. GIS mapping maintenance and updates
7. Monthly Management Reports Manhole Data Collection
8. Optional Root Foaming

The Town's contract with West Bay is available in Appendix B of this document.

Element 4:
OPERATION & MAINTENANCE PROGRAM

This section of the SSMP discusses the Town's operations, maintenance and other related measures and activities.

4.1 Regulatory Requirements for Measures and Activities

The SWRCB requirements for the Measures and Activities element of the SSMP are summarized below:

SWRCB Requirement

(a) Collection System Map - as appropriate and applicable to the system, the wastewater agency must maintain an up-to-date map of the sanitary sewer system, showing all gravity line segments, manholes, pumping facilities, pressure pipes, valves, and applicable stormwater conveyance facilities.

(b) Prioritized Preventive Maintenance - as appropriate and applicable to the system, the wastewater agency must describe routine preventive operation and maintenance activities by staff and contractors; including a system for scheduling regular maintenance and cleaning of the sanitary sewer system, with more frequent cleaning and maintenance targeted at known problem areas. The preventive maintenance program should have a system to document scheduled and conducted activities, such as work orders.

(c) Scheduled Inspections and Condition Assessment and Replacement Planning - as appropriate and applicable to the system, the wastewater agency must develop rehabilitation and replacement plan to identify and prioritize system deficiencies and implement short-term and long term rehabilitation actions to address each deficiency. The program should include regular visual and TV inspections of manholes and sewer pipes, and a system for ranking the condition of sewer pipes and scheduling rehabilitation. Rehabilitation and replacement should focus on sewer pipes that are at risk of collapse or prone to more frequent blockages due to pipe defects. Finally, the rehabilitation and replacement plan should include a capital improvement plan that addresses proper management and protection of the infrastructure assets. The plan shall include a time schedule for implementing the short and long term plans plus a schedule for developing the funds needed for the capital improvement plan.

(d) Training - as appropriate and applicable to the system, the wastewater agency must provide training on a regular basis for staff in sanitary sewer system operations, maintenance, and require contractors to be appropriately trained.

(e) Contingency Equipment and Replacement Inventories - as appropriate and applicable to the system, the wastewater agency must provide equipment and replacement part inventories, including identification of critical replacement parts.

4.2 Element 4 – Appendix C

Supporting information for Element 4 is included in Appendix C. This appendix includes the following documents:

1. West Bay Map Change Form
2. List of Sewer As-Built Drawings
3. Sewer Enterprise Fund
4. West Bay Mainline Worksheet
5. Hotspot Cleaning List (updated as needed)
6. West Bay Cleaning Matrix
7. West Bay Pump Station Inspection Form
8. West Bay Staff CWEA Certifications
9. West Bay Fleet and Equipment List
10. West Bay Spare Parts Inventory

4.3 Collection System Map

The Town maintains a centralized CAD map of the sanitary sewer collection system on the Town network server. The map is updated with most current data on an as-needed basis. Prior to 2014, the CAD maps were used by the Town's prior sewer contractor, Veolia Water, to develop sewer system maps in GIS. In 2014, the GIS map updates were brought onto the West Bay network for use in conjunction with the Town's computerized maintenance management system (Lucity), which is maintained by West Bay, the Town's sanitary sewer maintenance contractor.

The map includes the following information:

- Pipeline and manhole locations
- Manhole numbers
- Pipeline flow direction
- Pump station locations, including private pump stations
- Streets and street names
- Parcels and parcel IDs

Pipeline and manhole information on the CAD and GIS maps are schematic representations of the existing sanitary sewer systems within Town right-of-way and easements. West Bay is correcting this information as needed, based on field observations. A map change form is issued whenever there is new information observed in the field. The project manager reviews and approves the form prior to initiating the change. However, until cleaning and inspection for all system assets is completed, the maps should not be used to determine exact positions and alignments. A copy of the map change form is available in Appendix C of this document. Each sanitary sewer manhole is given a unique identification number. The maps differentiate whether a parcel is connected to the public sewer system or on septic systems. In the future, the GIS map will be updated with sewer lateral locations whenever new connections are made.

In 2014, the Town contracted with West Bay to deploy a new computerized maintenance management system named Lucity. The system is managed by West Bay, and the Town staff is able to access the data via internet through a web application to generate reports and strategize future sewer maintenance and improvements.

Lucity is populated by sewer system attributes such as manhole ID numbers, manhole rim and invert elevation data if available, and sewer main pipe segment length, diameter, pipe material and date maintained. Also, sanitary sewer overflow events, work orders, and NASSCO PACP pipe condition rating data collected from video inspection are available through Lucity.

In 2015, a grid based GIS map book was developed by West Bay and the Town's engineering consultant, V.W. Housen and Associates (VWHA). The map book is intended to be used in the field for maintenance operations and is updated by West Bay approximately quarterly, depending on the nature and extent of required changes.

A sample page of the GIS map book is shown in Figure 4-1.

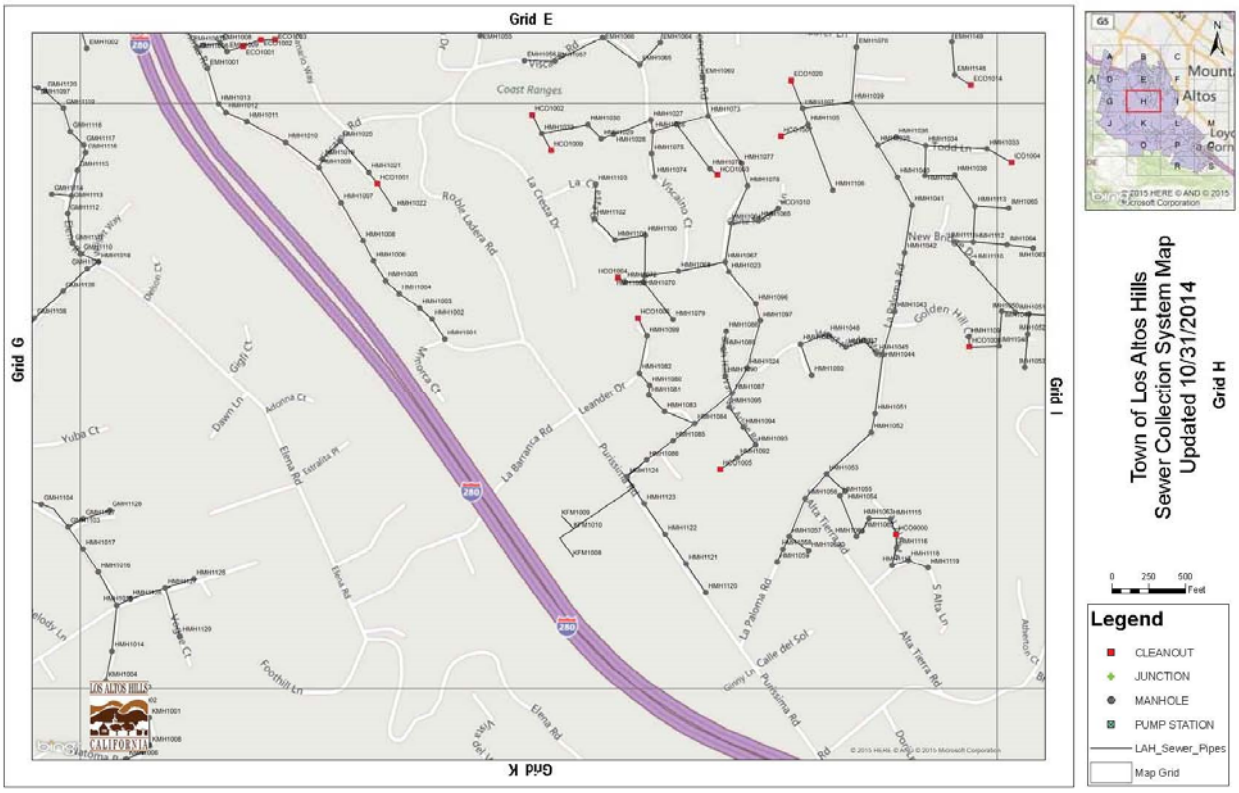

Figure 4-1: Town Grid Map Book

The Town retains sanitary sewer main line improvement "as-built" drawings dating back to 1961, which are available at Town Hall. A list of the sewer as-built drawings available for viewing is included in Appendix C. Most of the as-built drawings are scanned, uploaded and categorized to a digital vault system which can be accessed by the Town

staff through web interface provided by BMI (http://wh04.bmidata.com/Login/Default.aspx). Eventually, all as-built drawings will be scanned and uploaded to a centralized network as the Town transition more into digital archiving system.

4.4 Operations and Maintenance Resources and Budget

The Town funds sewer system services, including operations and maintenance, through a sewer enterprise fund. This fund is user-supported; it uses revenue from rate payers to fund sewer-related work. The Sewer Enterprise Fund budget summary is available in Appendix C of this document. The Fiscal Year 2015-16 budget allocated $2.391M for sewer system management.

The Town has no operations and maintenance staff dedicated to the sewer system. Public Works staff provide assistance as needed. However, the Town contracts out all operations, maintenance, and emergency response to West Bay. The contract and scope of work for West Bay is attached in Appendix C.

4.5 Routine Preventive Operation and Maintenance

As of August 2014, West Bay has provided preventive maintenance, emergency maintenance, and response to service calls. Prior to August 2014, the Town contracted with different private contractors to maintain Town's sanitary sewer system, with the most recent previous contractor being Veolia Water.

Sewer Cleaning and Flushing. From August 1, 2015 through September 30, 2016, and in each of the following two years, West Bay is contracted to clean 135,000 feet of sewer main pipes in the Town's right-of-way (ROW) and easements, including repeat cleaning of certain areas (if necessary).

The majority of sewer cleaning is completed by flushing. Power and hand rodding equipment are also utilized in hillside private easements when it is not feasible to access sanitary sewer lines with a flushing truck.

During the first contract year (August 2014 through July 2015), West Bay prioritized cleaning based on areas with known issues and those that did not have any previous cleaning records. This initial approach helped reduce the number of SSOs in the Town's collection system. In the 2015-16 contract year, West Bay is conducting cleaning and inspection on a branch-by-branch basis. Cleaning crews complete one system branch at a time before moving to the next basin. Branch sequence was selected based on previous cleaning history, SSO records, service calls and historical CCTV records. West Bay coordinates all cleaning efforts with the City Engineer and Senior Engineer prior to implementing cleaning operations.

West Bay is developing an updated hotspot list for the Town. Pipes on the hotspot list receive a cleaning on a 6- or 12-month basis. Pipes are added to the hotspot list based on cleaning and/or CCTV inspection results, or based on service call (for SSOs) information. For example, if a service call results from a problem related to grease or tree

roots, West Bay reviews the information and may add the location to their preventive maintenance hotspot cleaning list.

The Town currently does not use a formal process to move pipes onto or off of the hotspot list. However, as more data is collected, the Town, via West Bay, is considering implementation of the West Bay cleaning matrix for this purpose. The latest hotspot cleaning list for the Town sewer collection system and the cleaning matrix from West Bay's SSMP are both included in Appendix C of this document.

Once the sewer pipes are cleaned, the field crew documents the date, time started, completed method for cleaning, distance cleaned, number of passes required to clean the pipe segment, any debris removed during the cleaning, and notes/comments of the cleaning exercise. All of this information is collected by the crew on a tablet device. At the end of the workday, West Bay uploads the completed work information into Lucity. Cleaning log worksheets are maintained by the crew to serve as a backup when cleaning data does not upload properly in the tablet. A copy of the cleaning log is available in Appendix C of this document. With the cleaning information stored in the database, pipe cleaning history of each individual pipe segment and future cleaning schedules can be queried. Table 4-1 shows West Bay's proposed cleaning plan based on historical information, conditions observed in the field, and discussions with the Town.

Table 4-1: West Bay Proposed Cleaning Plan

Branch	Progress Status	Contract Year
1	100% complete	14-15
2	80% complete	14-15 & 15-16
3	Clean/CCTV after branch 2 and 5	16-17
4	Future Plans Pending	TBD
5	In progress	15-16
6	Clean/CCTV after branch 2 and 5	16-17
7	Future plans pending	TBD

The proposed plan outlined in Table 4-1 will be adjusted as needed based on field conditions. The overall objective is to clean the entire system on a 3-year cycle.

The Town completed chemical root control for a majority of the system in 2014. The Town is developing a strategy, based on recent cleaning and CCTV inspection data, to implement an ongoing chemical root control program for selective pipe segments, to help control root intrusion in the Town's system.

On a monthly basis, West Bay provides the Town a record of preventive maintenance performed on each sewer line segment during the prior month. This record includes the date the maintenance was performed, street name, manhole numbers, footage of pipe, method of cleaning, and notes on findings (grease, roots, etc.). West Bay also submits monthly reports of the total length of sewers cleaned and scheduled cleaning list for upcoming month.

Pump Station Preventive Maintenance. The Town owns two pump stations, Purissima and O'Keefe pump stations. Purissima pump station was designed for low flow and high head, and therefore has two submersible pumps that pump to two dry pit pumps. O'Keefe pump station has two submersible pumps.

Since August 2014, West Bay has been providing preventive maintenance for both of the Town's pump stations. Preventive maintenance includes the following activities:

- Weekly
  - Visually inspect and check the wet well levels to ensure proper automatic start/stop levels for the pumps.
  - Check pumps for unusual noise or vibrations.
  - Inspect dry pit pumps and motors for leaks, unusual noise or vibrations.
  - Record hour meter readings for each pump bank.
  - Clean and maintain the pump station area.
  - Inspect the motor control center for proper operations.

- Every 2 Months
  - Conduct amperage test on each pump bank.
  - Perform meg test on each pump motor to detect moisture in windings.

- Every Year
  - Perform yearly maintenance and inspection of the sewer pumps per current ITT Flygt recommended checklist.

- As-Needed
  - Vacuum wet well on an as needed basis.

Additionally, West Bay performs generator maintenance at the Purissima pump station every two weeks or as allowable by the Town's air quality permit, as follows. O'Keefe pump station does not have an on-site generator.

- Exercise generator, simulate power failure to insure automatic startup.
- Record generator hour meter reading.
- Check generator batteries, fuel, oil, and coolant levels.

West Bay includes, in the regular monthly reports, verification of the bi-weekly pump station inspections, as well as incident reports on service calls. The Town has contracted with VWHA to provide additional oversight and guidance on sewer maintenance activities.

4.6 Rehabilitation and Replacement Plan

The Town performs annual rehabilitation to correct problem areas identified during CCTV inspections. Pipes are typically replaced through pipe bursting or open trench construction, or spot repairs. The Town does not typically line pipes.

As part of the Town's 2015 Sewer Capital Improvement project, the Town replaced 2,850 linear feet of sewer mainline and conducted a total of 223 lineal feet of spot repairs. This work addressed issues within approximately 1 percent of the system.

In 2015, the Town contracted with VWHA to develop a Capital Improvement Plan (CIP) for Fiscal Year 2016/17. VWHA developed a numerical risk model that prioritized repair needs based on likelihood and consequence of failure. The Town is currently reviewing recommendations, which will be included in the Fiscal Year 2016/17 budget. Some of the parameters considered in the risk model are listed below:

- NASSCO PACP Structural and O&M CCTV inspection rating.
- Pipe size (relates to ability to maintain, and also defines size of area impacted area).
- Known maintenance issues (i.e. previous SSO history, hotspot list).
- Proximity to waterways, transportation corridors, parks, schools, and other critical facilities.

Sewer capital projects are funded by the sewer enterprise fund, through transfer to the Town's capital projects fund. Fees for services are reviewed and updated annually. The FY2015/16 budget for the sewer capital improvements is $970,000. The Sewer Enterprise Fund budget summary is available in Appendix C of this document.

4.7 Scheduled Inspections and Condition Assessment

West Bay conducts CCTV inspection of the sewer lines as a component of their contract with the Town. During the first contract year, from August 2014 through September 2015, West Bay inspected approximately 14 miles of sewer pipelines. The Town plans to complete CCTV inspections on the remaining lines in the system within the next three years as part of their contract with West Bay.

Pipeline condition is assessed using the NASSCO PACP system. All of West Bay CCTV field staff are NASSCO PACP certified. All CCTV information gathered by West Bay in the field is stored in Lucity and is made available to the Town. This CCTV information is a key component used by the Town when selecting and prioritizing sewer lines for repair and rehabilitation.

West Bay conducts pipeline inspection following cleaning activities for a given pipe segment. In 2014/15, West Bay focused video inspection activities on lines with known issues, as well as those with incomplete videos. Beginning in 2015/16, West Bay has conducted CCTV inspection on one system branch at a time, following cleaning activities in the same branch.

Manhole Inspection

As part of the cleaning program, West Bay staff visually inspect manholes for corrosion, debris or damage around the base, cracks or holes, and condition of manhole steps, and notify the City Engineer if there are any issues that should be addressed.

Pump Station Inspections and Assessment

Pump stations are inspected regularly by West Bay, as discussed under Section 4.5, Routine Preventive Operation and Maintenance. A copy of West Bay's pump station inspection checklist is available in Appendix C of this document.

4.8 Training

West Bay staff involved in the Town's SSMP activities undergo annual refresher training on both the SSMP and Overflow Emergency Response Plan (OERP). West Bay's field staff are CWEA certified and are trained by West Bay. Appendix C includes a list of West Bay staff and CWEA certifications. West Bay staff also receive retraining on an annual basis for confined space entry safety and general job site safety.

Records are maintained by West Bay of all staff training related to the Town's SSMP activities. These records will be provided by West Bay to the Town for record keeping on a regular basis. The records include the date, time, place, content, name of trainer(s) and names of attendees.

4.9 Contingency Equipment and Replacement Inventories

The Town does not keep any equipment or replacement parts on hand. The Town relies on West Bay to supply cleaning, maintenance, and emergency response equipment. A summary of West Bay's fleet, equipment, spare parts and pipe rehab inventory list is located in Appendix C of this document. The Town obtains replacement parts for its system and pump stations as-needed. The Town's pump stations include redundant pumps.

Element 5:
DESIGN & PERFORMANCE PROVISIONS

This section of the SSMP discusses the Town's design and construction standards.

5.1 Regulatory Requirements for Design & Construction Standards

The SWRCB requirement for the Design and Construction element of the SSMP is summarized below:

SWRCB Requirement

The Town must have design and construction standards and specifications for the installation of new sewer systems, pump stations and other appurtenances; and for the rehabilitation and repair of existing sewer systems. The Town must also have procedures and standards for inspecting and testing the installation of new sewers, pumps, and other appurtenances and for rehabilitation and repair projects.

5.2 Element 5 – Appendix D

Supporting information for Element 5 is included in Appendix D. This appendix includes the following documents:

1. Town of Los Altos Hills Sanitary Sewer Construction Notes.
2. Town of Los Altos Hills General Notes.
3. Standard Details.
4. Refer to the Legal Authority appendix (Appendix B) for the standard specifications, included in the Municipal Code.

5.3 Design & Construction Standards

The Town's minimum standards for sewer design and construction are included in the Municipal Code, as discussed under Element 3. The Code include the following requirements:

- License. Section 6-4.430 requires a sewer contractor business license issued by the Town before installing sewers.
- Permit. Section 6-4.434 requires a construction permit before connecting to a public sewer.
- Inspection. Section 6-4.437 requires all work to be inspected. The City Engineer is to inspect all pipes, fittings and other appurtenances relative to the sewer system to ensure compliance to requirements.
- Tests. Section 6-4.439 allows for the City Engineer to test new house sewers, including a water test or video inspection. This section also sets testing guidelines.

- Materials. Section 6-4.442 and subsections set minimum standards for materials and fittings used in sewer system construction, including specific standards for VCP, PVC, DIP, and HDPE. Standards for sewer joints are included in Section 6-4.443(5).
- Design Requirements. Section 6-5.443 and subsections specify design requirements for building sewers. Section 6-4.446 and sub-sections requires plans and specifications for sewer main extension to be approved by the City Engineer and sets a minimum sewer main diameter of 8 inches.

In addition to the standards set forth in the Town's municipal code, the Town has standard detail drawings of manholes and laterals, standard sanitary sewer construction notes, and standard general notes. These details and notes are included in Appendix D of this document and are available at the Town's website using this link: http://www.losaltoshills.ca.gov/198/Engineering-Public-Works-Documents Refer to the Legal Authority appendix (Appendix B) for the standard specifications and requirements contained in the municipal code.

Element 6:
OVERFLOW EMERGENCY RESPONSE PLAN (OERP)

The section of the SSMP discusses the Town's overflow emergency response plan, which is included in full in Appendix E.

6.1 Regulatory Requirements for OERP

The SWRCB requirements for the Overflow Emergency Response Plan element of the SSMP are as follows:

SWRCB Requirement

The collection system agency shall develop and implement an overflow emergency response plan that identifies measures to protect public health and the environment. At a minimum, this plan must include the following:

(a) Proper notification procedures so that the primary responders and regulatory agencies are informed of all SSOs in a timely manner;

(b) A program to ensure appropriate response to all overflows;

(c) Procedures to ensure prompt notification to appropriate regulatory agencies and other potentially affected entities (e.g. health agencies, regional water boards, water suppliers, etc.…) of all SSOs that potentially affect public health or reach the waters of the State in accordance with the MRP. All SSOs shall be reported in accordance with this MRP, the California Water Code, other State Law, and other applicable Regional Water Board WDR or NPDES permit requirements. The SSMP should identify the officials who will receive immediate notification;

(d) Procedures to ensure that appropriate staff and contractor personnel are aware of and follow the Emergency Response Plan and are appropriately trained;

(e) Procedures to address emergency operations, such as traffic and crowd control and other necessary response activities; and

(f) A program to ensure that all reasonable steps are taken to contain untreated wastewater and prevent discharge of untreated wastewater to waters of the United States and minimize or correct any adverse impact on the environment resulting from the SSOs, including such accelerated or additional monitoring as may be necessary to determine the nature and impact of the discharge.

6.2 Element 6 – Appendix E

Supporting information for Element 6 is included in Appendix E. This appendix includes the following documents:

1. Town of Los Altos Hills Emergency Overflow Response Plan prepared by DKF Solutions Group, revised by Town of Los Altos Hills on August 1, 2014.
2. West Bay Standard Operating Guidelines for Sanitary Sewer Overflow Response.

3. Standard Operating Procedures for Purissima Pump Station.
4. Standard Operation Procedures for O'Keefe Pump Station.
5. Town of Los Altos Hills Water Quality Monitoring Program.
6. BACWA Flyer for Plumber and Building Contractor Outreach.
7. SSO Technical Report template.

6.3 Overflow Emergency Response Plan

This section provides a brief discussion of the Town's overflow emergency response plan (OERP), which is included in full in Appendix E. The Town contracts out all of its sewer system maintenance and overflow emergency response activities to its maintenance contractor, West Bay. West Bay has its own operational guidelines and/or emergency response plan for responding to SSOs, which are also included in Appendix E. **These documents will be implemented for responding to SSO's throughout the duration of their service contract with the Town. The Town's plan was developed not to replace those documents, but rather to provide a reference for the overall emergency response process specific to the Town.**

Overflow Response Responsibilities

The Town is responsible for responding to (via their contractors) and reporting all SSOs that are caused by problems in public sewers within their service area, with the exception of the following locations:

- The Page Mill Road sewer main. Although located partially within Town limits, this main is owned and maintained by the City of Palo Alto. Palo Alto is responsible for responding to and reporting sewer overflow emergencies on this main.
- The sewer main serving Foothill College. Although this main is located within the Town service area, it is owned and maintained by the City of Los Altos. This arrangement is based on the agreement the Town has with the City executed in January, 2007, as Foothill College pays Los Altos directly for sewer service. Los Altos is responsible for responding to and reporting sewer overflow emergencies on this main.

The Town is also responsible for responding to and reporting emergencies associated with two pump stations within their service area: Purissima Pump Station in the Palo Alto Basin and O'Keefe Pump Station in the Los Altos Basin. The service area also contains several private pump stations. However, the Town has no responsibility for emergency response or reporting for these private stations.

Overflow Emergency Response Plan Sections

The Town's OERP is organized into seven sections, as follows:

1. Response Plan Binder – Establishes the purpose, policy and scope of the plan, identifies the areas where the Town is responsible for sewer overflow response

and reporting, provides an overview of the additional emergency response documents maintained by the Town's contractors.

2. Field Guide – Discusses customer relations practices following a sewer backup. Introduces general use of hydroflusher and rodders, containment procedures, flow volume estimation procedures, bypass pump selection tables, determining overflow rates from a manhole, sewer overflow response tactics guide, emergency vendor contact information, and internal resources contact information.
3. Regulatory Notifications Packet – Discusses measures taken by the Town's contractors in reporting to regulatory authorities.
4. Field Water Sampling – Discusses procedures for sampling receiving water and posting; warnings after a sewage spill, sample collection chain of custody record.
5. Sewer Backup Packet – Discusses how contractor should respond to backup situation and provides first responder form, SSO compliance report, CCTV work order, claim submittal checklist, customer service packet, and sewer spill reference guide.
6. Sanitary Sewer Overflow Packet – Discusses how contractor should respond in sewer overflow incidents and provides protocol and forms.
7. Miscellaneous – Includes general public posting, door hanger, and related reference guide pamphlet.

6.4 Notification, Reporting, Monitoring, and Record Keeping Requirements

No Spill Certification

SWRCB Order No. 2006-003-DWQ (Sanitary Sewer Order) requires the Town to submit a certification statement online to CIWQS within 30 days after the end of each calendar month in which no SSO occurred. For the months when no SSOs are reported, the legally responsible official (LRO) for the Town shall file the "No Spill Certification" online to CIWQS every third Monday of a month following the no spill month.

SWRCB SSO Program Manager Contact

The SWRCB SSO Program Manager contact information is as follows:

Russel Norman, P.E.
State Water Resources Control Board
Division of Water Quality
1001 I Street 15th Floor
Sacramento, CA 95814
E-mail: Russell.norman@waterboards.ca.gov
Phone: (916) 323-5598

SSO Reporting

Table 6-1 summarizes SSO notification, reporting, monitoring, and record-keeping requirements.

Table 6-1: Notification, Reporting, Monitoring, and Record Keeping

ELEMENT	REQUIREMENT	METHOD
NOTIFICATION	Within two hours of becoming aware of any Category 1 SSO greater than or equal to 1,000 gallons discharged to surface water or spilled in a location where it probably will be discharged to surface water, the Town will notify the California Office of Emergency Services (CalOES) and obtain a notification control number.	Call Cal OES at: (800) 852-7550
REPORTING	• Category 1 SSO: The Town will submit draft report within three business days of becoming aware of the SSO and certify within 15 calendar days of SSO end date. • Category 2 SSO: The Town will submit draft report within 3 business days of becoming aware of the SSO and certify within 15 calendar days of the SSO end date. • Category 3 SSO: The Town will submit certified report within 30 calendar days of the end of month in which SSO the occurred. • SSO Technical Report: The Town will submit within 45 calendar days after the end date of any Category 1 SSO in which 50,000 gallons or greater are spilled to surface waters. • "No Spill" Certification: The Town will certify that no SSOs occurred within 30 calendar days of the end of the month or, if reporting quarterly, the quarter in which no SSOs occurred. • Collection System Questionnaire: The Town will update and certify every 12 months	Enter data into the CIWQS Online SSO Database (note a) (http://ciwqs.waterboards.ca.gov/) certified by the LRO (note b). All information required by CIWQS will be captured in the SSO Report. Certified SSO reports may be updated by amending the report or adding an attachment to the SSO report within 120 calendar days after the SSO end date. After 120 days, the State SSO Program Manager must be contacted to request to amend an SSO report along with a justification for why the additional information was not available prior to the end of the 120 days.
WATER QUALITY MONITORING	The Town will conduct water quality sampling within 48 hours after initial SSO notification for Category 1 SSOs in which 50,000 gallons or greater are spilled to surface waters.	Upload water quality results into CIWQS for Category 1 SSOs in which 50,000 gallons or greater are spilled to surface waters.
RECORD KEEPING	The Town will maintain the following records for five (5) years: • SSO event records. • Records documenting Sanitary Sewer Management Plan (SSMP) implementation and changes/updates to the SSMP.	Self-maintained records shall be available during inspections or upon request.

ELEMENT	REQUIREMENT	METHOD
	• Records to document Water Quality Monitoring for SSOs of 50,000 gallons or greater spilled to surface waters. • Collection system telemetry records if relied upon to document and/or estimate SSO Volume.	

Notes:

a. In the event that the CIWQS online SSO database is not available, the Senior Engineer will notify SWRCB by phone and will fax or e- mail all required information to the RWQCB office at (510) 622-2460 in accordance with the time schedules identified above. In such an event, the Town will submit the appropriate reports using the CIWQS online SSO database when the database becomes available. A copy of all documents that certify the submittal in fulfillment of this section shall be retained in the SSO file.

b. The Town always has at least one LRO. Any change in the LRO(s) including deactivation or a change to contact information, will be submitted to the SWRCB within 30 days of the change by calling (866) 792-4977 or emailing help@ciwqs.waterboards.ca.gov.

6.5 Water Quality Monitoring Plan

A Water Quality Monitoring Plan must be implemented immediately upon discovery of any Category 1 SSO of 50,000 gallons or more in order to assess impacts from SSOs to surface waters. Water quality sampling must be completed within 48 hours of the Town becoming aware of the SSO.

The Town's SSO Water Quality Monitoring Program is included in Appendix E, and includes the following:

- Protocols for water quality monitoring
- Account for spill travel time in the surface water and scenarios where monitoring may not be possible (e.g. safety, access restrictions, etc.)
- Requirement for water quality analyses for ammonia and bacterial indicators to be performed by an accredited or certified laboratory
- Requirement for monitoring instruments and devices used to implement the SSO Water Quality Monitoring Program to be properly maintained and calibrated, including any records to document maintenance and calibration, as necessary, to ensure their continued accuracy

6.6 SSO Technical Report

If 50,000 gallons or greater from an SSO reaches surface waters, an SSO Technical Report must be prepared and submitted to the CIWQS online SSO database within 45 calendar days of the SSO end date. The SSO Technical Report must include, at a minimum, the following:

Causes and Circumstances of the SSOs

- Complete and detailed explanation of how and when the SSO was discovered.
- Diagram showing the SSO failure point, appearance point(s), and final destination(s).
- Detailed description of the methodology employed and available data used to calculate the volume of the SSO and, if applicable, the SSO volume recovered.
- Detailed description of the causes(s) of the SSO.
- Copies of the original field crew records used to document the SSO.
- Historical maintenance records for the failure location.

Response to SSO:

- Chronological narrative description of all actions taken to terminate the SSO.
- Explanation of how the OERP was implemented to respond to and mitigate the SSO.
- Final corrective action(s) completed and/or planned to be completed, including a schedule or actions not yet completed.

Water Quality Monitoring:

- Description of all water quality sampling activities conducted including analytical results and evaluation of the results.
- Detailed location map illustrating all water quality sampling points.

The Public Works Director/City Engineer is responsible for the development and certification of the SSO Technical Report.

6.7 SSO Response Training

This section provides information on the training that is required to support this Overflow Emergency Response Plan.

Initial and Annual Refresher Training

All personnel who may have a role in responding to, reporting, and/or mitigating a sewer system overflow should receive training on the contents of this OERP. All new employees receive training before they are placed in a position where they may have to respond. Current employees receive annual refresher training on this plan and the procedures to be followed. The Town and/or WBSD as applicable document all training.

The Town uses West Bay to provide all operations, maintenance, and emergency response for its collection system. West Bay conducts training as described below. Town staff receive an annual refresher of the contents of the OERP and SSMP.

West Bay staff receive annual training on the following topics by knowledgeable trainers:

- The WBSD and Town's Overflow Emergency Response Plan and Sanitary Sewer Management Plan.
- Sanitary Sewer Overflow Volume Estimation Techniques.
- Water Quality Sampling Plan

SSO Response Drills

West Bay conducts periodic training drills or field exercises to ensure that maintenance crew members are up to date on procedures, equipment is in working order, and the required materials are readily available. The training drills cover scenarios typically observed during sewer related emergencies (e.g. mainline blockage, mainline failure, and lateral blockage). The results and the observations during the drills are recorded and action items tracked to ensure completion.

SSO Training and Record Keeping

Records are kept by West Bay of all training that is provided in support of this plan. The records for all scheduled training courses and for each overflow emergency response training event include date, time, place, content, name of trainer(s), and names and titles of attendees.

Contractors Working on Town Sewer Facilities

All construction contractors working on Town sewer facilities should be provided with instruction on the measures to take in the event that they cause or observe an SSO (see OERP Appendix B). Emergency response procedures should be discussed at project pre-construction meeting and after any contractor involved incidents. A generic SSO flyer is handed out to Plumbers & Sewer Contractors that engage in sewer related work within the Town's boundaries Representative materials are included in Appendix E.

Element 7:
FOG CONTROL PROGRAM

This section of the SSMP presents the regulatory requirements for Fats, Oils, and Grease (FOG) Control. Although the Town is not required to have a formal FOG Control program, there are certain informal measures available to the Town for FOG Control. This section discusses these measures and also provides justification for why a formal FOG control program is unnecessary.

7.1 Regulatory Requirements for FOG Control Element

The SWRCB requirements for the FOG Control element of the SSMP are summarized below:

SWRCB Requirement

The Town shall evaluate its service area to determine whether a FOG control program is needed. If the Town determines that a FOG program is not needed, the Town must provide justification for why it is not needed. If FOG is found to be a problem, the Town must prepare and implement a FOG source control program to reduce the amount of these substances discharged to the sanitary sewer system. The FOG source control program shall include the following as appropriate:

(a) An implementation plan and schedule for a public education outreach program that promotes proper disposal of FOG;

(b) A plan and schedule for the disposal of FOG generated within the sanitary sewer system service area. This may include a list of acceptable disposal facilities and/or additional facilities needed to adequately dispose of FOG generated within a sanitary sewer system service area;

(c) The legal authority to prohibit discharges to the system and identify measures to prevent SSOs and blockages caused by FOG;

(d) Requirements to install grease removal devices (such as traps or interceptors) design standards for the grease removal devices, maintenance requirements, BMP requirements, record keeping and reporting requirements;

(e) Authority to inspect grease producing facilities, enforcement authorities, and whether the Town has sufficient staff to inspect and enforce the FOG ordinance;

(f) An identification of sewer system sections subject to FOG blockages and establish a cleaning maintenance schedule for each section; and

(g) Development and implementation of source control measures, for all sources of FOG discharged to the sewer system, for each sewer system section identified in (f) above.

7.2 Element 7 – Appendix F

Supporting information for Element 7 is included in Appendix F. This appendix includes the following documents:

1. Current list of food service establishments in Los Altos Hills.
2. Residential FOG public outreach poster.
3. Food Handling Facilities FOG public outreach poster.

7.3 FOG Control Program

The Town has determined that a formal FOG Control program is not needed for the following reasons:

- The Town is nearly 100% residential, and without FOG-related problems. According to the Santa Clara County Department of Environmental Health, the Town has eight food service facilities within the Town Limits. Two of these facilities, within Foothill College premise, discharge to the Foothill sewer main, for which the City of Los Altos takes responsibility. Appendix F contains a current list of food service establishments within Town limit.
- There have been no records of FOG related SSOs since 2011.

7.4 FOG Control Activities

Although the Town does not need a formal FOG Control Program, certain activities and measures are available for preventing or addressing FOG-related problems.

Hot Spot Identification and Cleaning

The Town's contractor, West Bay, conducts regular hot spot cleaning. Although no hot spots specifically related to FOG are currently on their cleaning lists, if a FOG-related problem were to occur, the associated pipe segment would be added to the hot spot list. Refer to Element 4: Routine Preventive Maintenance for more information on the Town's preventive maintenance activities.

Public Outreach

Through their partnership fees to the Palo Alto Regional Water Quality Control Plant, the Town supports public outreach campaigns developed by the Plant. The City of Palo Alto has developed FOG public outreach guidelines targeted to both residential and food handling facility dischargers in all of the communities that discharge to the plant, including the Town of Los Altos Hills. In addition to discouraging discharge of FOG to the sewers, this public outreach guideline directs residents and food handlers on how to properly dispose of FOG, and specifies the Plant as a disposal location for large amounts of FOG. Copies of these FOG guidelines are included in Appendix F of this document.

The Plant also conducts seasonal outreach to the public prior to and during the November and December holiday season. In addition, the Plant, along with supporting materials from the Bay Area Pollution Prevention Group (BAPPG), is preparing for point-of-purchase labels that indicate the proper disposal of the grease to be at deep fat fryer sales sites in local hardware stores.

Legal Authority

The Town's municipal code contains sections prohibiting grease discharges and requirements for grease removal devices.

a. Legal authority to prohibit discharges. Section 6-4.424 of the Town's municipal code prohibits grease disposal, as follows:

> No person shall dispose of any grease, or cause any grease to be disposed, by discharge into any drainage piping, by discharge into any public or private sanitary sewer, by discharge into any storm drainage system, or by discharge to any land, street, public way, river, stream, or other waterway.

b. Requirement of grease removal device. Section 6-4.425 of the Town's municipal code requires a grease removal device for every commercial or industrial generator of grease, as of 1997. This article also requires the business to clean out the grease removal device at least every six months and to keep a log of all grease removal cleaning. The log must be available for inspection for a 3-year period. The text of this section is included below:

> A. The owner of every newly constructed, remodeled, or converted commercial or industrial facility with one or more grease generating activities, including food service facilities with new or replacement kitchens, for which a building permit is issued on or after January 1, 1992, shall install or cause to be installed a grease interceptor for each grease generating activity, of a size equal to or greater than the minimum size meeting the definition of grease interceptors, as set forth in section 108 of the then currently adopted edition of the Uniform Plumbing Code.
>
> B. The owner of every commercial or industrial generator of grease, including food service facilities, serviced by a sewer collection line found to have a grease blockage, a history of grease blockage or accelerated line maintenance resulting from grease disposal shall install or cause to be installed, upon notification by the City Engineer, a grease removal device.
>
> C. The owner of every commercial or industrial generator of grease, including food service facilities, for which installation of grease removal devices is not required pursuant to subsections (a) or (b) of this section, shall install or cause to be installed a grease removal device for each grease generating activity, on or before January 1, 1997.
>
> D. All grease removal device(s) shall be installed on the premises where grease is used or generated and shall be sized in conformance *with the Uniform Plumbing Code*. The contents of all grease removal devices shall be removed periodically as necessary to prevent violations of this chapter. At a minimum, the contents shall be removed every six (6) months. All grease removal devices shall be

kept in good repair, and shall be maintained in continuous operation. A log of all grease removal activities shall be maintained at the facility showing the date of removal, the amount removed and the disposition of the removed contents. The log shall be retained for a period of three (3) years, and shall be available for inspection by the City Engineer upon request.

Identification of FOG Issues

The Town's sewer maintenance contractors record the reason for backups and SSOs. If FOG related SSOs were to increase in the future, the Town would evaluate the need for additional FOG control measures. For additional information on performance parameters the Town tracks, refer to Element 9: Monitoring, Measurement, and Program Modifications.

Element 8:
SYSTEM EVALUATION & CAPACITY ASSURANCE PLAN

This section of the SSMP discusses the Town's capacity management measures, including the upcoming Master Plan and plan for development of capacity improvement projects.

8.1 Regulatory Requirements for Capacity Management

The SWRCB requirements for the Capacity Management element of the SSMP are summarized below:

SWRCB Requirement

The wastewater collection system agency shall prepare and implement a capital improvement plan that will provide hydraulic capacity of key sewer system elements under peak flow conditions. This plan must include:

(a) Evaluation: The agency must identify actions needed to evaluate those portions of the sewer system that are experiencing or contributing to an SSO discharge caused by hydraulic deficiency. The evaluation must provide estimates of peak flows, estimates of the capacity of key system components, hydraulic deficiencies, and the major sources that contribute to the peak flows associated with overflow events.

(b) Design Criteria: Where design criteria do not exist or are deficient, the agency should undertake the evaluation identified in (a) above to establish appropriate design criteria.

(c) Capacity Enhancement Measures: The agency must identify the steps needed to establish a short- and long-term capital improvement plan (CIP) to address identified hydraulic deficiencies including prioritization, alternatives analysis, and schedules. The CIP may include increases in pipe size, I/I reduction programs, increases and redundancy in pumping capacity, and storage facilities. The CIP shall include an implementation schedule and shall identify sources of funding.

(d) Schedule: The agency shall develop a schedule of completion dates for all portions of the CIP developed in (a) through (c) above. This schedule shall be reviewed and updated at least every five years.

8.2 Element 8 – Appendix G

There are no Appendix documents to accompany Element 8. However, this Appendix G is included as a placeholder for future documents.

8.3 Capacity Evaluation

The Town completed a Sanitary Sewer Master Plan including a capacity assessment in January 2004. The Master Plan was based on hydraulic modeling of the Town's collection system under then-current and future design flows. However, the changes in

development and flow that were described in the Master Plan were not realized, and the recommendations from the Master Plan are now obsolete. The Town has plans to update the existing hydraulic model to determine the Town's current and future capacity and associated needs. At this time, there are no known capacity-related SSO locations in the system.

In 2015, the Town contracted V&A Consulting Engineers to conduct a flow monitoring study in preparation for development of a the new hydraulic model and master plan. Due to the drought condition in 2015, the Town delayed the program for one year. V&A installed meters in January 2016, in anticipation of significant rainfall that is predicted to occur in February 2016. If sufficient flow data is collected, the Town will have the flow data required to update the hydraulic model.

After a new hydraulic model has been developed, the Town's Sanitary Sewer Master Plan will be updated and a new list of capacity improvement projects will be identified. The updated Master Plan will provide the basis for strategic planning for upgrading, improving, and expanding the Town's sanitary sewer infrastructure.

The proposed schedule for development of an updated hydraulic model and master plan is as follows:

- Complete flow monitoring program: March 2016
- Obtain manhole elevation data: Spring 2016
- Select master planning consultant: Summer/Fall 2016
- Complete master plan and capacity-related CIP: Spring 2017
- Update FY2017/18 budget to include recommended improvements.

Flow Monitoring Study

The Town has contracted with V&A Consulting Engineers to monitor Wet Weather Flow (WWF) and Dry Weather Flow (DWF), beginning in January 2016. The flow monitoring study is in preparation for the development of a hydraulic model and master plan as well, and will also provide data to assist with rate setting. The goals of the flow monitoring study are as follows:

1. Obtain wet weather readings to determine peaking factor and estimate I&I for hydraulic model calibration.
2. Obtain DWF to support hydraulic model and master plan development, as well as assist with rate setting.
3. Estimate average daily flow per parcel in each basin.
4. Determine total flow level in Los Altos and Palo Alto basins.

Early weather reports project the months of January, February, and March to have heavy rainfall due to the "El Nino" predictions. The flow meters have been installed in the ten locations listed in Table 8-1.

Table 8-1: Flow Metering Locations

Site Number	Basin Name	Location	Manhole ID
1	Palo Alto	Old Page Mill Road at Girth Lane	AMH1007
2	Palo Alto	Foothill Expressway south of Arastradero Road	CMH1016
3	Palo Alto	Arastradero Road	Line End 03 (manhole next to BMH1038)
4	Palo Alto	Fremont Road just north of Town Hall	EMH1115
5	Palo Alto	Purissima at Elena near pump station	EMH1003
6	Los Altos	West Edith at Town Boundary	FMH1006
7	Los Altos	Near El Monte Avenue opposite sides of 280	LMH1115, LMH1067, Line End 07
8	Los Altos	El Monte just south of Mooty Road intersection	LMH1126
9	Los Altos	Magdalena at Summerhill Avenue	QMH1058
10	Los Altos	Westbrook Avenue East of 280	QMH1122

Element 9:
MONITORING, MEASUREMENT, & PROGRAM MODIFICATIONS

This section of the SSMP discusses parameters the Town tracks to monitor the success of the SSMP.

9.1 Regulatory Requirements for Monitoring, Measurement, and Program Modifications

The SWRCB requirements for the Monitoring, Measurement, and Program Modifications (MMPM) element of the SSMP are summarized below:

SWRCB Requirement

The Town shall:

(a) Maintain relevant information that can be used to establish and prioritize appropriate SSMP activities;

(b) Monitor the implementation and, where appropriate, measure the effectiveness of each element of the SSMP;

(c) Assess the success of the preventative maintenance program;

(d) Update program elements, as appropriate, based on monitoring or performance evaluations; and

(e) Identify and illustrate SSO trends, including: frequency, location, and volume.

9.2 Element 9 – Appendix H

Supporting information for Element 9 is included in Appendix H. This appendix includes the following documents:

1. Element 9: SSMP Monitoring Tracking Sheet

9.3 Monitoring and Measurement

In order to monitor the effectiveness of the SSMP, the Town has selected specific parameters that can be documented and compared on an annual basis in a simple format. Changes in these parameters over time should indicate the overall success of the SSMP or, conversely, underlying problems that can then be investigated further.

Table 9-1 lists each SSMP element, the overall purpose of the SSMP element, and the specific parameters that the Town plans to track that will help in evaluating the effectiveness of the SSMP. Appendix H includes a tracking sheet listing each of these parameters, which the Town will fill out annually in conjunction with completing the SSMP audit (Element 10).

Table 9-1. SSMP Monitoring Parameters, by SSMP Element

SSMP Element	Summary of Element Purpose	Parameters for Tracking Effectiveness (Annual)
Goals	Establish priorities of Town and provide focus for Town staff	Goals are reviewed annually
Organization	Document organization of Town staff and chain of communication for SSO response	Organizational chart, chain of communication, and all contact information updated annually
Legal Authority	Ensure the Town has sufficient legal authority to properly maintain the system	Claims: total number and total $ amount
Operation and Maintenance Program	Minimize blockages and SSOs by properly maintaining the system and keeping the system in good condition	• Total number and volume of SSOs • Number of repeat SSOs (same location as any previous SSO, regardless of year of occurrence) • Number of SSOs by cause (e.g., roots, grease, debris, pipe failure, pump station failure, etc.) • Length of pipe CCTV'd • Length of pipe cleaned • Total number of manholes inspected • Length of pipe repaired
Design & Construction Standards	Ensure new facilities are properly designed and constructed	Standards reviewed and updated annually
Overflow Emergency Response	Provide timely and effective response to SSO emergencies and comply with regulatory reporting requirements	• Average and maximum response time. • Percent of total overflow volume contained or returned to sewer. • No. of odor complaints
Fats, Oils, & Grease Control	Minimize blockages and overflows due to FOG	• Number of blockages or overflows due to FOG • FOG hotspots in the system
Capacity Management	Minimize SSOs due to insufficient capacity by evaluating system capacity and implementing necessary projects	Number of SSOs due to capacity limitations
Monitoring, Measurement, & Program Modifications	Evaluate effectiveness of SSMP, keep SSMP up-to-date, and identify necessary changes	Completion of annual assessment
Program Audits	Formally identify SSMP effectiveness, limitations, and	Completion of audit on time

SSMP Element	Summary of Element Purpose	Parameters for Tracking Effectiveness (Annual)
	necessary changes on an annual basis	
Communication Plan	Communicate with the public and satellite agencies.	SSMP posted on website by May 2016

The Town will use the parameters listed in Table 9-1 and documented on the tracking sheet included in Appendix H to assist in completion of the annual SSMP Audit described in Element 10.

9.4 SSO Trends

Since 2011, the Town has reduced their sanitary sewer overflows (SSOs) from 21 per year to 7 per year. General SSO trends are provided in Table 9-2 and Figure 9-1. Most notably, between 2014 and 2015, West Bay has assisted the Town in reducing SSOs from 18 in 2014 to 7 in 2015.

Table 9-2. SSO Trends

Parameters	Year				
	2011	2012	2013	2014	2015
Number of dry weather SSOs	21	13	12	18	7
Number of wet weather SSOs (capacity-related)	0	1	0	0	0
Total number of SSOs	21	14	12	18	7
Number of SSOs per 100 miles of sewer per year[b]	38	23	21	32	13
Number of SSOs < 100 gallons	12	6	7	10	4
Number of SSOs 100 to 999 gallons	7	6	5	4	3
Number of SSOs 1,000 to 9,999 gallons	2	2	0	4	0
Number of SSOs > 10,000 gallons	0	0	0	0	0
Total volume of SSOs (gallons)	5,204	5,294	1,826	11,963	713
Total volume recovered and returned to collection system (gallons)	1,300	0	150	5,424	572
Net volume of SSOs (total minus recovered, gallons)	3,904	5,294	1,676	6,539	141
Percent volume recovered (100 x Total volume recovered / Total volume of SSOs)	25%	0%	8%	45%	80%
Volume Reaching Water	300	1,810	180	5,083	0

Note: a) All statistical data was obtained from the California Integrated Water Quality System Project (CIWQS)

b) The Town of Los Altos Hills consists of 56 miles of pipe. CWIQS information will be updated to reflect this information during the next annual questionnaire update.

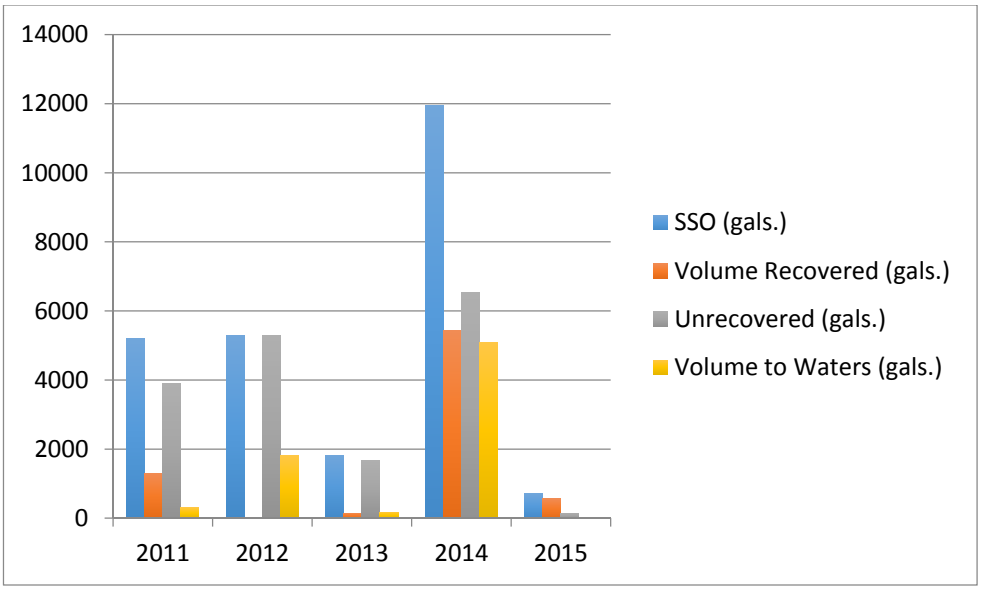

Figure 9-1. SSO Trends

Information on SSOs by cause is presented in Table 9-3 and Figure 9-2.

Table 9-3: SSO by Cause

Year	Total SSOs	Cause[a]					
		Roots	Debris	Grease	Structural	Pump Station Failure	Other
2011	21	18	1	0	1	0	1
2012	14	10	0	0	1	0	2
2013	12	9	2	0	0	0	1
2014	18	16	1	0	1	1	0
2015	7	5	1	0	0	0	1

Note: a)All statistical data was obtained from the California Integrated Water Quality System Project (CIWQS)

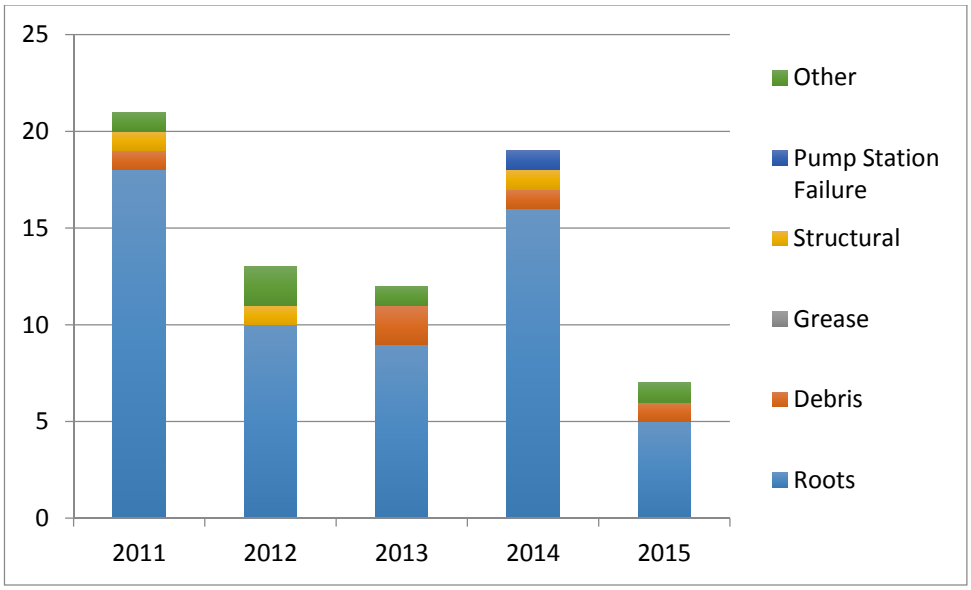

Figure 9-2: SSOs by Cause

SSO data provided in this SSMP were obtain from CWIQS and can be found in this link: https://ciwqs.waterboards.ca.gov/ciwqs/readOnly/PublicReportSSOServlet?reportAction=criteria&reportId=sso_main

9.5 SSMP Modifications

In 2015, the Town's SSMP was updated to reflect changes that were made in sewer system maintenance and management, through the addition of West Bay and VWHA to the Town's sewer management team.

Town staff will update critical information, such as contact numbers and the SSO response chain of communication, on a regular basis, as needed. A comprehensive SSMP update will occur every 5 years, as required by the SWRCB.

Element 10: SSMP AUDITS

This section of the SSMP discusses the Town's SSMP auditing program.

10.1 Regulatory Requirements for SSMP Audits

The SWRCB requirement for the SSMP Audits element of the SSMP is summarized below:

SWRCB Requirement

The Town shall conduct periodic internal audits, appropriate to the size of the system and the number of SSOs. At a minimum, these audits must occur every two years and a report must be prepared and kept on file. This audit shall focus on evaluating the effectiveness of the SSMP and the Town's compliance with the SSMP requirements, including identification of any deficiencies in the SSMP and steps to correct them.

10.2 Element 10 – Appendix I

1. Completed SSMP audits
2. SSMP Change Log
3. SSMP Audit Report Template

10.3 SSMP Audits

The Town completes an audit of the SSMP on a biennial basis. The audit process is documented in the Biennial SSMP Audit Form shown in Appendix 10. The audit form provides structure for a systematic review of each SSMP element. If updates or changes are required, the content and timeline to complete those changes should be described in the audit form.

The Public Works Director and Senior Engineer are responsible for updating the SSMP document to reflect changes made as a result of the audit. Changes made to the SSMP are/will be documented in the Change Log in Appendix I. A comprehensive SSMP update will occur every 5 years, as required by the SWRCB.

Upon completion of each audit, the Town retains a report of the audit on file to fulfill the SWRCB audit requirement. The most recent audit can be found in in Appendix I of the SSMP.

Element 11:
COMMUNICATION PROGRAM

This section of the SSMP discusses the Town's communications with the public and satellite agencies.

11.1 Regulatory Requirements for Communication Program

The SWRCB requirement for the Communication Plan element of the SSMP is summarized below:

SWRCB Requirement

The Town shall communicate on a regular basis with the public on the development, implementation, and performance of its SSMP. The communication system shall provide the public the opportunity to provide input to the Town as the program is developed and implemented. The Town shall also create a plan of communication with systems that are tributary and/or satellite to the Town's sanitary sewer system.

11.2 Element 11 – Appendix J

Supporting information for Element 11 is included in Appendix J. This appendix includes the following documents:

1. Partners Mailing List (contact list for the Palo Alto Regional Water Quality Control Plant partners).

11.3 Communication Program

The Town maintains a website (http://www.losaltoshills.ca.gov/) to inform the public about Town activities. The Town's website is an effective communication channel for providing alerts and news to the public. The main page of the website provides access to important announcements, agendas and minutes for City Council meetings, and other key information for Town residents. Various public works documents are published on the Town Documents page of the website.

The updated SSMP will be adopted by the City Council during a public meeting. The Town is in the process of redesigning its website and will make the SSMP available in the website for download once this process is completed. The Town will also use the website to notify the public of important upcoming activities related to sewer system management. Documents relating to the adoption of the most recent version of the SSMP will be available in Appendix J upon adoption of the City Council.

In addition, the Town communicates directly with other neighboring agencies. These agencies include the City of Los Altos, the City of Palo Alto, and the Palo Alto Regional Water Quality Control Plant, which accepts and treats flow from the Town via the Cities of Palo Alto and Los Altos collection systems. The Town attends quarterly partners

meetings at Palo Alto at which both treatment plant and collections system issues are discussed. The Town currently has no satellite collection system agencies.

Appendix A
Organization Element Supporting Documents

Appendix A Documents

1. Names and Phone Numbers of Sewer Staff
2. Contact Numbers for SSO Chain of Communication

Appendix A – Document 1
Names and Phone Numbers of Sewer Staff

Names and Phone Numbers of Sewer Staff

Position	Name	Telephone Number
City Manager	Carl Cahill	(650) 947-2514
Public Works Director	Nichol Bowersox	(650) 947-2516
Senior Engineer	Kaho Kong	(650) 947-2511
Maintenance Superintendent	Jacob Asfour	(650) 948-9044
Contractor – West Bay	Phil Scott	(650) 321-0384 (office)
Contractor – West Bay	Sergio Ramirez	(650) 321-0384 (office) (650) 477-9885 (cell)

Appendix A – Document 2
Contact Numbers for SSO Chain of Communication

Contact Numbers for SSO Chain of Communication

Contact		Telephone Number
Town Hall		(650) 941-7222
Town Public Works Director	Nichol Bowersox	(650) 947-2516 (office) (408) 230-3194 (cell)
Maintenance Superintendent	Jacob Asfour	(650) 823-4547 (cell)
Senior Engineer	Kaho Kong	(650) 947-2511 (office) (628) 238-8915 (cell)
West Bay Sanitary Dist.	Sergio Ramirez	(650) 321-0384 (office) (650) 477-9885 (cell)
City of Palo Alto	Sewer Dispatch	(650) 496-6982
	Communications (after hours)	(650) 329-2413
	Jasen Strickland	(650) 444-6123
	Frank Alvarado	(650) 444-1268
County Communications		(408) 299-3233
Emergency Sewer Repair Contractors	Preston Pipelines, Inc., Milpitas	(408) 262-1418
	Stirling Underground (on easement only)	(831) 429-5622
	Stoloski and Gonzalez, Inc., Half Moon Bay	(650) 726-7119
	West Valley, Redwood City	(800) 400-9464 (800) 588-5510
	John Glage Underground	(408) 379-3010
	EPS Inc.	(800) 246-6425
Regional Water Quality Control Board- San Francisco Bay		(510) 622-2300 (Tel) (510) 622-2460 (Fax)
State Water Quality Control Board- Water Quality Division		(916) 341-5455

Appendix B
Legal Authority Element Supporting Documents

Appendix B Documents

1. Ordinance No. 440 (version of Municipal Code Title 6, Chapter 4, Article 4 (Sewer Use Code) that was adopted by the Town Council on September 15, 2005).

2. City of Palo Alto and City of Los Altos Discharge Agreement

3. West Bay Agreement maintenance contract and 2015 amendment

Appendix B – Document 1
Ordinance No. 440

ORDINANCE NO. 440

AN ORDINANCE AMENDING TITLE 6, CHAPTER 4, ARTICLE 4 OF THE LOS ALTOS HILLS MUNICIPAL CODE BY ADOPTING REVISED SEWER USE CODE

The City Council of the Town of Los Altos Hills does hereby ordains as follows:

Section 1: Title 6. Sanitation and Health, Chapter 4, Article 4 of the Los Altos Hills Municipal Code is hereby amended to read in full as follows:

"Article 4. Sewer Use Code

Sec. 6-4.401. Definitions.

Sec. 6-4.402. Responsibility of the City Engineer.

Sec. 6-4.403. Industrial wastes discharge permit.

Sec. 6-4.404. Industrial wastes discharge permit procedure.

Sec. 6-4.404(1). Compliance schedule.

Sec. 6-4.404(2). New sources.

Sec. 6-4.405. Personnel orientation.

Sec. 6-4.406. Suspension or revocation of industrial wastes discharge permit.

Sec. 6-4.407. Permit denial, revocation or suspension hearing.

Sec. 6-4.408. Waste sampling locations.

Sec. 6-4.408(1). Discharger monitoring.

Sec. 6-4.409. Trucker's discharge permit.

Sec. 6-4.410. Limitations on points of discharge and prohibited discharge.

Sec. 6-4.411. Confidentiality.

Sec. 6-4.412. Accidental discharges.

Sec. 6-4.413. Discharger self-monitoring.

Sec. 6-4.414. Prohibited effect.

Sec. 6-4.415. Character of wastes.

Sec, 6-4.434(3). Unlawful acts under construction permit.

Sec, 6-4.434(4). Expiration of construction permit.

Sec,6-4.435. Sewer system connection fees, of charges.

Sec, 6-4.436. Construction permit fees.

Sec, 6-4.437. All work to be inspected.

Sec, 6-4.438. Notification.

Sec, 6-4.439. Tests.

Sec, 6-4.440. Materials and labor for test.

Sec, 6-4.441. Excavations.

Sec, 6-4.442. Minimum standards.

Sec, 6-4.442(1). Markings.

Sec, 6-4.442(2). Vitrified clay pipe and fittings.

Sec, 6-4.442(3). Polyvinyl chloride (PVC) pipe.

Sec, 6-4.442(4). Ductile iron pipe (DIP) and fittings.

Sec, 6-4.442(5). High density polyethylene (HDPE) pipes and fittings.

Sec, 6-4.442(6), Cleanout fittings.

Sec, 6-4.442(7). Backwater and gate valves.

Sec, 6-4.442(8). Approved materials and methods.

Sec, 6-4.442(9). Workmanship.

Sec, 6-4.442(10). Protection of materials.

Sec, 6-4.442(11). New materials and methods of construction.

Sec, 6-4.443. Use of existing sewers.

Sec, 6-4.443(1). Building sewer.

Sec, 6-4.443(2). Size and slope – Building sewer.

Sec, 6-4.443(3). Elevation – Building sewer.

Article 4. Sewer Use Code

Sec. 6-4.401. Definitions.

The following words and phrases, whenever used in this chapter, shall be as defined herein. Terminology for analytical testing shall be that contained in "Guidelines Establishing Test Procedures for the Analysis of Pollutants", published at Title 40 Code of Federal Regulations, Part 136.

(a) "Average concentration" of a substance shall mean the total daily discharge weight of the substances divided by the total daily wastewater volume at the point of discharge.

(b) "Backwater Valve" shall mean any approved check valve or other approved device to prevent the flow of sewage from the public sewer into the building.

(c) "Building" shall mean any structure erected for the support, shelter, and enclosure of persons, animals, chattel or movable property of any kind.

(d) "Building Drain" shall mean House Drain.

(e) "Building Sewer" shall mean House Sewer.

(f) "Carbonaceous Biochemical Oxygen Demand (CBOD) shall mean the quantity of oxygen utilized in the biochemical oxidation of organic matter, expressed in parts per million by weight. CBOD concentrations shall be determined under standard analytical procedures specified in the publication "Standard Methods for the Examination of Water and Wastewater" jointly prepared and published by the American Public Health Association, the American Water Works Association, and the Water Environment Federation and/or other alternate procedures specified and required by the United States Environmental Protection Agency and/or the State of California Environmental Protection Agency.

(g) "Cesspool" shall mean a lined or partially lined underground pit into which raw sanitary sewage is discharged.

(h) "City" means the City of the Town of Los Altos Hills.

(i) "City Engineer" shall mean the City Engineer for the Town of Los Altos Hills.

(j) "Customer" shall mean any person(s), business, organization, or other agency that obtains sewer service from the Town of Los Altos Hills.

(k) "Discharger" shall mean any person who discharges, causes or permits the discharge of industrial waste into a City sewer or storm drain.

(l) "Domestic waste or Domestic sewer" shall mean wastewater that is produced from non-commercial and non-industrial activities and that results from normal human living processes.

(m) "Drainage System, or Drainage Piping" shall mean and include all the piping within public or private premises, which conveys sewage, or other liquid wastes, to a point of disposal, but shall not include the mains, laterals, manholes, and pipe encasements of a public sewer system.

(n) "EPA" shall mean the United States Environmental Protection Agency.

(o) "Exceptional wastes" shall mean aqueous wastes that may include but are not limited to (i) construction site dewatering where soil or groundwater contamination is present, (ii) groundwater contaminated with organic solvents generated as a result of pump tests in preparation for a groundwater cleanup or water generated during sampling events, (iii) aqueous wastes generated by either permanent or mobile hazardous waste treatment units used to treat hazardous waste at the generator's

potable. By-pass arrangements, jumper connections, removable sections, swivel or changeover assemblies, or other assemblies through which backflow could occur, shall be considered to be cross-connections.

5. The discharge of wastewater from swimming pools upon the ground.

(x) "Instantaneous maximum" shall mean the highest concentration or other measure of pollutant magnitude taken at any discrete point in time.

(y) "Instantaneous minimum" shall mean the lowest concentration or other measure of pollutant magnitude taken at any discrete point in time.

(z) "Interceptor" shall mean a receptacle or trap designed and constructed to intercept, separate, and prevent the passage of prohibit- ed substances into the sewer system.

(aa) "Lot" shall mean a single or individual parcel or area of land, legally recorded, on which is situated a building together with the yards, courts and unoccupied spaces legally required for the building and which is owned by or is in the lawful possession of the owner of the building.

(bb) "New sources" shall mean sources of industrial waste that commence discharging subsequent to the effective date of this section.

(cc) "Organic solvent" shall mean any solvent which contains carbon in its molecular structure.

(dd) "Outside Sewer" shall mean sewer lines owned by the Town lying outside the City limits (Town limits).

(ee) "Premises" shall mean any lot, piece or parcel of land, any building or other structure or any part of any building or structure used or useful for human habitation or gathering or for carrying on a business or occupation.

(ff) "Public Sewer" shall mean any sewer, which is part of the municipal sewer system, including any sewer main within any public street or sewer easement and any outside sewer.

(gg) "Person" shall mean any individual, partnership, firm, association, corporation or public agency.

(hh) "Plant" shall mean the Palo Alto Regional Water Quality Control Plant.

(ii) "Point of discharge" shall mean the point or points designated as such in the permit. Where no designation is made it shall mean the point where the private sewer joins a public sewer.

(jj) "Pretreatment system" shall mean a treatment system at an industrial or commercial facility that is designed to treat water prior to entering the City's sewer system.

(kk) "Sanitary sewage" shall mean water-carried wastes from residences, business property, institutions and industrial property excluding ground, surface, and storm waters and industrial wastes.

(ll) "Secondary containment" shall mean the level of containment external to and separate from the primary containment.

(mm) "Seepage pit" shall mean a device comprised of one (1) or more pits extending into porous strata, lined with open-jointed masonry or similar walls, capped and provided with a means of access such as a manhole cover and into which wastewater disposal system effluent is discharged.

(nn) "Septic Tank" shall mean a water-tight receptacle which receives the discharge of a drainage system or part thereof, designed and constructed so as to retain solids, digest organic matter through a period of detention, and allow the liquids to discharge into the soil outside of the tank through a system of open joint piping, or a seepage pit meeting the requirements of this Code.

organization to discharge any industrial wastes in excess of the quantity or quality limitations set for this article or by a permit for industrial wastes discharge.

(b) A discharger may request permission to discharge prohibited wastes or wastes containing concentrations of substances or characteristics in excess of those permitted by this article, hereinafter referred to as exceptional industrial wastes.

(c) The City Engineer may authorize a discharger by permit to discharge exceptional industrial wastes when the permit will not result in a violation of any of the prohibited effects described in Section 6-4.414, and the City is compensated for any costs it incurs including any expense in determining whether such discharge is compatible with the sewer system.

(d) The permit for any industrial wastes discharge may require pretreatment of industrial wastes before discharge, restrict peak flow discharges, prohibit discharge of certain wastewater components, restrict discharge to certain hours of the day, require payment of additional charges to defray increased costs to the City created by the wastewater discharge and impose such other conditions as may be required to effectuate the purpose of this article.

(e) No permit for industrial wastes discharge is transferable without the prior written consent of the City Engineer.

(f) Any person or organization desiring to change the quantity or quality of waste discharged to the sewer system or to discharge wastes or use facilities which are not in conformance with their industrial waste permit shall apply for and obtain an amended permit prior to any such discharge or use. An application for an amended permit must be filed with the City Engineer sixty (60) days in advance of the proposed commencement of such discharge or use of such facilities.

Sec. 6-4.404. Industrial wastes discharge permit procedure.

(a) Applicant for a permit for any industrial wastes discharge shall complete and submit an application form available at the City Engineer's office for each point of discharge. The City Engineer shall establish the contents of said form and may require additional information on the characteristics of the wastewater discharge beyond that required on the application form.

(b) The application shall be approved if the applicant has complied with all requirements of this article, furnished all requested information, and the *Town* determines that there are adequate devices, equipment, chemicals, and other facilities to convey, treat, and dispose of the industrial wastes.

Sec. 6-4.404(1). Compliance schedule.

In the event that an industrial wastes discharge permit holder should be affected by a newly promulgated waste discharge standard, such permit holder shall be granted a time schedule for the installation of technology required to meet the applicable pre-treatment standards and requirements; provided, however, that during such time for compliance existing provisions of this article shall not be violated.

intention to deny, revoke, or suspend and shall inform the applicant or permit holder that they have ten (10) days from the date of receipt of the notice to file a written request for a hearing. The application shall be denied or the permit shall be revoked or suspended if a hearing request is not received within the ten (10) day period.

(c) If the applicant or permit holder files a timely hearing request, the City Manager shall set a time and place for the hearing within five (5) working days from the receipt of the request. All parties involved shall have the right to offer testimonial, documentary, and tangible evidence bearing on the issues and to be represented by counsel. The decision of the City Manager, whether, to deny the application or revoke or suspend the permit shall be final.

Sec. 6-4.408. Waste sampling locations.

Every establishment from which industrial wastes are discharged to the sewer system shall provide and maintain one or more outside manholes, access boxes, junction chambers or other sampling points approved by the City Engineer which will permit the separate sampling of sanitary and industrial wastes. The City Engineer may approve sampling points which will permit the separate sampling of industrial wastes only for establishments existing on the effective date of this article. Sanitary and industrial wastes shall be kept completely separated upstream of such sampling points. Establishments that are billed for sewer service on the basis of sewage effluent constituents shall provide a suitable means for sampling to determine billing constituents. Sampling points shall be so located that they are safe and accessible to *Town* inspectors at any reasonable time during working hours.

Sec. 6-4.408(1). Discharger monitoring.

(a) City Engineer or his or her authorized representative may conduct all inspection, surveillance and monitoring procedures necessary to assure compliance with applicable sections of this article or with United States Environmental Protection Agency or State of California regulations.

(b) Representatives of the City Engineer shall be authorized to enter, during normal working hours, any premises of any discharger in which an industrial waste source or treatment system is located or in which records are required to be kept to assure compliance with this article and applicable Federal, State of California and County of Santa Clara regulations.

Sec. 6-4.409. Trucker's discharge permit.

(a) All persons operating vacuum or "cesspool" pump trucks or other liquid waste transport trucks desiring to discharge septic tank, seepage pit, interceptor or cesspool contents, industrial liquid wastes or other liquid wastes to the sewer system shall first acquire a trucker's discharge permit.

(b) Truck transported industrial wastes shall be discharged only at the locations specified by the City Engineer for the specific waste. The *Town* shall require payment for treatment and disposal costs or may refuse

(c) In the event of accidental discharge in violation of this article, discharger shall furnish the *Town*, within fifteen (15) days of the date of occurrence, a detailed written statement describing the causes the accidental discharge and the measures being taken to prevent future occurrence. Such information shall be used for the purpose of achieving compliance and shall not be used for prosecution of the accident discharge violation.

Sec. 6-4.413. Discharger self-monitoring.

The City Engineer may require the discharger to conduct a reasonable sampling and analysis program of discharger's industrial waste of frequency and type required by the City Engineer to demonstrate compliance with the industrial waste requirements of this article. The City Engineer may require the industrial discharger to have samples analyzed, at discharger's expense, by a laboratory approved by the State of California Department of Health for such analysis. If compliance is demonstrated, samples shall not be required more frequently than quarterly.

Sec. 6-4.414. Prohibited effect.

Wastes discharged into the sewer system shall not have characteristics which by themselves or by interaction with other wastes may:

(a) Endanger public health and safety;

(b) Cause damage to the sewer system;

(c) Create nuisance such as odors or coloration;

(d) Result in extra cost of collection, treatment, or disposal;

(e) Inhibit or disrupt any wastewater treatment process;

(f) Prevent, hinder, delay, or impede compliance with effluent quality requirements established by regulatory agencies, or exceed the same;

(g) Cause wastewater quality to fall outside reclamation feasibility limits.

Sec. 6-4.415. Character of wastes.

Wastes prohibited from discharge to the City's sewer system are as follows:

(a) *Biochemical Oxygen Demand (B.O.D.).* The average B.O.D. concentration of discharged wastes shall not exceed 400 mg/liter.

(b) *Chemical Oxygen Demand (C.O.D.).* The average C.O.D. concentration of discharged wastes shall not exceed 1,000 mg/liter.

(c) *Dyes.* Wastes showing excessive coloration shall not be discharged into the sewer system. Excessive coloration shall be defined as any coloration in a waste which, for any wave length, displays less than sixty (60%) percent of the light transmissibility of distilled water under the following conditions:

(1) After filtration through a 0.45 micron membrane filter;

(2) In the pH range of 5.5 to 10.0;

(3) Through a one centimeter light path;

(i) *Radioactivity*. The discharge of radioactive wastes into the sewer system shall conform to the requirements of California Radiation Control Regulations Title 17, California Administrative Code, Chapter 5, Subchapter 4, and as subsequently amended.

(j) *Solids.*

(1) Inert solids. The discharge of inert solids including but not limited to sand, glass, metal chips, bone, plastics, etc. into the sewer is prohibited. Settling chambers or treatment works shall be installed where necessary to prevent the entry of inert solids into the sewer system.

(2) Solid particles. Industrial wastes shall not contain particulate matter that will not pass through a one-half (1/2)-inch screen; this subsection shall not apply to sanitary sewage from industrial establishments.

(3) Suspended solids. The average concentration of suspended solids shall not exceed 3,000 mg/liter nor shall the maximum concentration of suspended solids exceed 6,000 mg/liter.

(4) Total solids. The average concentration of total solids shall not exceed 1,500 mg/liter and the maximum concentration of total solids shall not exceed 5,000 mg/liter.

(k) *Stored liquid wastes.* Liquid wastes that have been collected and held in tanks or containers shall not be discharged into the sewer system except at locations authorized by the City Engineer to collect such wastes. Wastes of this category include but are not limited to:

(1) Chemical toilet wastes;
(2) Industrial wastes collected in containers or tanks;
(3) Pleasure boat wastes;
(4) Septic tank pumpings;
(5) Trailer, camper, housecar or other recreation vehicle wastes.

(l) *Storm Water*. No storm water, roof or yard drainage, foundation or underdrainage shall be discharged into the sewer system, nor shall any plumbing or piping be connected in such a manner as to make possible the discharge of storm water.

(m) *Temperature*. Temperature of wastewater at the point of discharge shall not exceed 120 degrees F, except for periods of time limited to thirty (30) minutes and for flows limited to 30 gallons per minutes, a temperature of 150 degrees F may be permitted.

(n) Toxicity. Toxic discharges include, but are not limited to, heavy metals, cyanides, phenols. bactericides, antibiotics and insecticides.

(l) The following is a nonexclusive list of toxic substances and the maximum concentrations allowed for each discharge of 50,000 gallons per day or less. For discharges greater than 50,000 gallons per day the maximum concentration shall be one-half the values in the table with the exception of silver, for which the limit shall remain 0.25 mg, liter regardless of flow:

Toxicant	**Maximum Concentration Allowable**
Arsenic	0.1 mg/liter
Barium	5.0 mg/ liter
Beryllium	1.0 mg/liter
Boron	1.0 mg/liter
Cadmium	0.1 mg/liter
Chromium, Hexavalent	1.0 mg/liter
Chromium total	2.0 mg/liter
Cobalt	1.0 mg/liter

Sec. 6-4.418. Civil penalties.

Any person who intentionally or negligently violates any provision of this article or any provision of any permit issued pursuant to said article shall be civilly liable to the *Town* in a sum not to exceed Six Thousand and no/l00ths ($6,000.00) Dollars for each day in which such violation occurs. The *Town* may petition the Superior Court pursuant to Government Code 54740 to impose, assess, and recover such sums. The remedy provided in this section is cumulative and not exclusive, and shall be in addition to the penalty provisions of Chapter 2 of Title 1 of the Los Altos Hills Municipal Code and all other remedies available to the City.

Sec. 6-4.418(1). Public notification of violations.

At least annually at the beginning of the *Town's* fiscal year, notice shall be provided in the largest local daily newspaper listing those industrial users that are found to have significantly violated the provisions of this article during the previous twelve (12) months. For the purposes of this provision, a significant violation is: A violation which remains uncorrected forty-five (45) days after notification; a violation that is a part of a pattern of noncompliance over the twelve (12) month period; a violation that involves a failure to accurately report noncompliance; a violation that results in a permit revocation or suspension; results in damage to public facilities; or a violation that results in civil penalties.

Sec. 6-4.419. Conflicts with EPA requirements.

In the event of conflicts between the discharge requirements established in this article and future EPA discharge requirements, the most restrictive limitation shall apply.

Sec. 6-4.420. Construction requirements.

The owner of every new commercial and industrial building or portion thereof for which a building permit is issued on or after July 1, 1992 must cause such building to be constructed so that industrial waste is segregated, by means of separate plumbing, from domestic waste prior to converging with other wastestreams in the sanitary sewer system. For the purposes of this section only, the term new shall mean and apply to all of the following: newly constructed buildings; building additions that require plumbing for industrial waste; and remodeling of existing buildings to accommodate expansion of or change to a use that requires plumbing for industrial waste.

Sec. 6-4.421. Requirements for photographic materials processing.

(a) All photoprocessors shall comply with either subsection (a)(2) or subsection (a)(3) of this subsection (a). Persons who fully comply with

the manufacturer's standards for such equipment. A record of system service shall be maintained at the facility where the system is located, and be available for inspection by City inspectors upon request.

(vi) Every person intending to comply with the provisions of this subsection (a)(2), shall submit a compliance plan to the City Engineer on or before April 1, 1991. The compliance plan shall contain a description of the silver removal system and any regeneration systems to be used to meet the discharge limits set forth in this subsection (a)(2). The compliance plan shall include, but not be limited to, equipment specifications, waste volume estimates, and proposed procedures for sampling and testing. No person shall commence operating a silver removal system after June 30, 1991 without having submitted a compliance plan to the superintendent at least forty-five (45) days prior to commencing operation of such system.

Every person intending to comply with the provisions of this subsection (a)(2) shall submit an annual report to the superintendent on or before February 1, 1992 and annually thereafter. The annual report shall contain the following information for the preceding calendar year:

a. Type and description of silver removal processes and any regeneration systems employed;

b. Amount of spent solutions generated:

c. Amount of washwater generated;

d. Dates of equipment servicing;

e. Description of any major changes in equipment or operation; and

f. All wastewater sampling data.

(3) Off Site Disposal. Persons who comply with this subsection shall ship or cause to be shipped off site, for recovery or appropriate disposal, all spent solutions or shall regenerate all spent solutions on site.

Storage, shipment and disposal of spent solutions shall be in accordance with all State, Federal and local requirements.

Every person who complies with this subsection (a)(3) shall maintain, or cause to be maintained, records that detail the purchase date and quantity of all new fixer, bleach-fix, stabilizer and functionally similar solutions kept or used by such person. Such person shall also maintain, or cause to be maintained, detailed disposal records that include the date, type and amount of waste solution disposed of: the name, address and identification number of the shipper; and the ultimate destination of each batch of waste solution shipped off site. Such person shall also maintain, or cause to be maintained, a record of the amount of spent solutions regenerated on site.

All records required to be kept pursuant to this subsection shall be kept for a period of three (3) years at the photoprocessing site, and shall be available for immediate inspection upon request therefor by city inspectors during normal business hours.

Beginning on or before February 1, 1992, and annually thereafter, every photoprocessor intending to comply with this subsection shall submit to the superintendent a summary of the required records maintained by such photoprocessor relating to purchase and disposition of photographic solutions. The summary shall be on a form provided by the superintendent. Along with the summary, every photoprocessor shall submit a statement certifying that it is in compliance with this subsection and that the required records are available for inspection.

Photoprocessors that comply with this subsection need not meet the silver discharge limitations set forth in subsections (a)(2)(i) or (ii) of this section, nor the silver discharge limitations set forth in Section 6-4.415(n) with respect to the photographic materials processing portion of their

maintenance resulting from grease disposal shall install or cause to be installed, upon notification by the City Engineer, a grease removal device.

(c) The owner of every commercial or industrial generator of grease, including food service facilities, for which installation of grease removal devices is not required pursuant to subsection (a) or (b) of this section, shall install or cause to be installed a grease removal device for each grease generating activity on or before January 1, 1997.

(d) All grease removal device(s) shall be installed on the premises where grease is used or generated and shall be sized in conformance *with the Uniform Plumbing Code.* The contents of all grease removal devices shall be removed periodically as necessary to prevent violations of this chapter. At a minimum, the contents shall be removed every six (6) months. All grease removal devices shall be kept in good repair, and shall be maintained in continuous operation. A log of all grease removal activities shall be maintained at the facility showing the date of removal, the amount removed and the disposition of the removed contents. The log shall be retained for a period of three (3) years, and shall be available for inspection by the City Engineer upon request.

Sec. 6-4.426. Requirements for vehicle service facilities.

(a) *Definitions.* For the purposes of this section the following words and phrases shall be as defined herein

(1) "Commercial vehicle washing facility" shall mean a commercial facility where vehicle washing is a primary business activity. Commercial vehicle washing facilities include, but are not limited to, mobile washing rigs.

(2) "Fleet washing facility" shall mean a facility for washing vehicles, at a location where a business maintains six (6) or more vehicles.

(3) "Ground surfaces" shall mean and include dirt, gravel or other unpaved surfaces.

(4) "Vehicle" shall mean a mode of transporting people or things. Vehicles include, but are not limited to, automobiles, trucks, recreational vehicles, tractors, airplanes and boats.

(5) "Vehicles fluid" shall mean a liquid used in or drained from a motor vehicle. Vehicle fluids include, but are not limited to, gasoline, diesel fuel, motor oil, brake fluid, radiator fluid, hydraulic fluid, transmission fluid and coolant.

(6) "Vehicle service facility" shall mean a commercial or industrial facility that conducts one or more of the following operations with respect to vehicles or components of vehicles; vehicle repair, fuel dispensing, vehicle fluid replacement, engine and parts cleaning, body repair, vehicle salvage and wrecking or vehicle washing.

(b) On and after October 1, 1992, all vehicle service facilities shall be operated in accordance with the following standards:

(1) No person shall dispose of, nor permit the disposal, directly or indirectly, of vehicle fluids, hazardous materials or rinse water from parts cleaning operations into storm drains.

(2) All owners and operators of vehicle service facilities shall ensure that any vehicle fluid, hazardous material or rinse water from parts cleaning operations that comes into contact with any floor, pavement or ground surface is cleaned up immediately from such surface.

(3) No person shall dispose of vehicle fluids or rinse water from parts cleaning operations into the sanitary sewer system except pursuant

Sec. 6-4.427. Storage of hazardous materials above sinks.

No person shall store hazardous materials above a sink in a commercial or industrial facility.

Sec. 6-4.428. Officers responsible.

The Director of Public Works shall be responsible for enforcing the provisions of this Article which pertain to:

(a) Use of public sewers;
(b) Connection of private house sewers to public sewers;
(c) House sewers which connect to public sewers.

The Health Officer of Santa Clara County shall be responsible for the enforcement of provisions, which pertain to the correction, or abatement of insanitary conditions, which present an immediate hazard to life and health.

Sec. 6-4.428(1). Right of entry.

The aforesaid officers and their authorized agents shall have the right of entry, during usual business hours, and at any time when, upon reasonable cause, they believe there is an immediate hazard to life, health, or property, to inspect any and all buildings and premises in the performance of their duties.

Sec. 6-4.428(2). Dangerous and Insanitary condition.

Whenever any construction or condition regulated by this Article is deemed by the responsible officer to be dangerous, unsafe, insanitary or a menace to life, health or property or is in violation hereof, the responsible officer shall order any person using or maintaining any such condition or responsible for the use or maintenance thereof to discontinue the use of or maintenance thereof or to repair, alter, change, remove or demolish same as the officer may consider necessary for the proper protection of life, health or property.

Every such order shall be in writing, addressed to the owner, agent or person responsible for the premises in which such condition exists and shall specify the date or time when such order shall be complied with, which time shall allow a reasonable period in which such order can be complied with by the person receiving such order but shall never exceed the maximum period for which such construction can be safely used or maintained in the judgment of said officer. Refusal, failure or neglect to comply with any such notice or order shall be considered a violation of this Article.

Sec. 6-4.428(3). Dangerous and Insanitary Condition. Declared a Public Nuisance.

The existence of any construction or condition of plumbing or sewers on any premises within the Town of Los Altos Hills which is found to be

(a) *Connection to the sewer at this time would be impractical due to personal hardship; and*
(b) *The premises are now served by a septic tank; and*
(c) *By written report of the Santa Clara County Department of Environment Health, the septic tank is operating efficiently now and that its continued operation would not create a hazard to public health.*

Upon receipt of such evidence to the City Manager's satisfaction, the said extension of time for completing the connection may be granted in writing. Such a delay shall not be subject to further extensions.

Sec. 6-4.433. Septic tank construction.

When permitted, the house sewer or private sewer shall be connected to a private sewage disposal system. Such private sewage disposal system shall be designed, constructed, operated and maintained in accordance with requirements of the Santa Clara County Department of Environmental Health and shall be approved by the City Engineer. There shall be no expense to the Town for the operation and maintenance of private sewage disposal facilities.

When, in the opinion of the Santa Clara County Department of Environmental Health, there is insufficient lot area or inadequate soil condition for adequate sewage disposal for the building or land use proposed, no building permit shall be issued and no private sewage disposal system shall be permitted. No permit shall be issued for any private sewage disposal system employing subsurface soil absorption facilities where there is an available public sewer within 200 feet, measured along streets, alleys, or public right-of-way upon which a lot abuts. No septic tank or cesspool shall be permitted to discharge into any public sewer or natural outlet.

Sec. 6-4.434. Construction permit required.

No person whose premises are not now connected with the public sewer system shall connect any premises or cause any premises to be connected with the municipal sewer system without first obtaining a construction permit from the City Engineer to do so.

No unauthorized person shall uncover, make any connections with or opening into, use, alter, or disturb any public sewer or appurtenance thereof without first obtaining a written construction permit approved by the City Engineer.

Sec. 6-4.434(1). Application for construction permit.

Every applicant for a construction permit to install, add to, alter, relocate, or replace sewerage facilities, or any part thereof, shall state in writing on the application form provided for that purpose, the work proposed to be done and the location, ownership, occupancy and use of the premises in connection therewith. The City Engineer may require plans, specifications, or drawings and other such information as deemed necessary.

authorized by such construction permit is suspended or abandoned at any time after the work is commenced for a period of one hundred twenty (120) days. Before such work can be recommenced, a new construction permit shall first be obtained so to do.

Sec. 6-4.435. Sewer system connection fees, or charges.

(a) Authority to Assess Connection Fees. Any customer (new or existing) of the public sanitary sewer system who installs new or additional fixtures, processes, or equipment, or otherwise causes an increase in wastewater discharge into the Town sewer, is required to pay to the Town a sewer connection fee (This connection fee or charge is in addition to the Connection Fee or Charge for rights of capacity and use in the facilities of City of Palo Alto or City of Los Altos.) No connection shall be made to the sewer system, and no increase in wastewater discharge volume shall occur from an existing connection, until the Town has approved such discharge and applicable sewer connection fee has been paid. Fees shall be paid in accordance with the following:

Residential Users: One standard residential connection fee shall be assessed for maximum sixty (60) fixture units calculated per Plumbing Code. Sewer Connection Fee for a residential unit or service unit with more than sixty (60) fixture units (FU) shall be calculated per the following formula:

Sewer Connection Fee = Total FU divided by 60 times one standard Residential connection Fee

Sewer Connection Fees shall be adopted by resolution of the City Council.

(b) Minimum Connection Fee. The minimum sewer connection fee shall be imposed for a single-family dwelling unit with fixture units in the range from 1 to 60 units per Plumbing Code.

(c) Sewer Connection Fee Credits. In determining sewer connection fees for a facility, the Town shall credit applicants with the capacity previously paid for and purchased for the property. If documentation is not available regarding purchased capacity, the Town shall determine the likely purchased capacity. No other credit shall be granted.

(d) Connection Fee Nonrefundable. All sewer connection fees as herein provided are non-refundable.

(e) Capacity Rights and Transferability. Sewer system capacity rights and the right to connect to the public sewer shall run with the property and shall not be transferred to, or used for any property other than the property for which sewer connection fees were paid, unless the City Engineer specifically authorizes such a transfer.

Sec. 6-4.436. Construction permit fees.

Construction permit fees shall be as specified from time to time by resolution of the City Council.

All excavations required to be made for the installation of a sewerage system, or part thereof, within or without a building shall be kept open until the piping has been tested, inspected and approved.

If any sewerage system or part thereof is covered or concealed before being regularly inspected, tested and approved, as herein prescribed, it shall be exposed upon the direction of the City Engineer.

All excavations shall be backfilled in accordance with the requirements of Town's STANDARD SPECIFICATIONS AND STANDARD DETAILS.

Sec. 6-4.442. Minimum standards.

All materials used and all joints made in or entering into the construction of sewerage systems or parts thereof shall be watertight and free from defects. The materials and joints specified in this Code are the minimum approved standards that shall be used. All materials used shall be of adequate strength and durability and of such design as to provide a substantial watertight system free from irregularities in flow lines.

Sec. 6-4.442(1). Markings.

Each length of ductile iron soil pipe and each ductile iron fitting used in a sewerage system shall be stamped or indelibly marked with the weight or grade thereof and the maker's mark or name.

Sec. 6-4.442(2). Vitrified clay pipe and fittings.

Vitrified clay pipe and fittings shall meet the minimum requirements of the current specifications for Extra Strength Unglazed Clay Pipe of the American Society for Testing Materials, Designation: A74-66 or the United States Department of Commerce Standard for Service Weight Cast Iron Soil Pipe and Fittings, Designation Commercial Standard DS188-66 as amended.

Sec. 6-4.442(3). Polyvinyl chloride (PVC) pipe.

Pipe, fittings, couplings, and joints shall meet the minimum requirements of ASTM Designation D3034 as they apply to type SDR-26 PVC pipe.

Sec. 6-4.442(4). Ductile iron pipe (DIP) and fittings.

All ductile iron pipes shall meet the minimum requirement of ANSI Standard A 21.50 and A 21.51 (AWWA C150 and C151), and shall be polyethylene lined and seal-coated in conformance with the requirements of ANSI Standard A 21.4 (AWWA C104). Thickness Class shall be Number 50 for 6-inch through 36-inch diameter pipe, and Number 51 for four-inch and smaller diameter pipe. The pipe shall be wrapped with black 8-mil-thick polyethylene conforming to the requirements of AWWA C1O5."

or deposit of solids. Valve access-cover shall be installed in an approved manner so as to be readily accessible at all times.

Gate valves, when used on drainage work, shall be fullway type with working parts of non-corrosive metal. Sizes four (4) inches or more in diameter shall have cast iron bodies, and sizes of less than four (4) inches, cast iron or brass bodies.

Sec. 6-4.442(8). Approved materials and methods.

Repairs to sewerage systems shall be made with such materials and by such methods as is provided for by this Article for new work, insofar as it is practical so to do.

Sec. 6-4.442(9). Workmanship.

All workmanship shall be of such character as to fully secure the results sought to be obtained in all sections of this Code.

Sec. 6-4.442(10). Protection of materials.

All pipes passing under or through walls, shall be protected from breakage. All pipes passing through or under cinders, concrete, or other corrosive materials, shall be protected from external corrosion in an approved manner.

Sec. 6-4.442(11). New materials and methods of construction.

The provisions of this Article are not intended to prevent the use of any material or any method of construction not specifically prescribed herein, provided any such alternate has been approved and its use authorized by the City Engineer. The City Engineer may approve any such alternate provided it is found that the proposed design is satisfactory and complies with the intent of this Article, and that the material or method of work offered is for the purpose intended, at least the equivalent of that here prescribed in quality, strength, effectiveness, durability and safety. The City Engineer shall require that sufficient evidence or proof be submitted to substantiate any claims that may be made regarding the sufficiency of any such proposed material or type of construction.

Sec. 6-4.443. Use of existing sewers.

Old building sewers may be used in connection with new buildings only when it has been tested in accordance with Sec. 6-4.439 and determined by the City Engineer to meet all requirements of this Article.

Sec. 6-4.443(5). Joints and connections.

All joints and connection shall be made gas-tight and watertight.

Joints in vitrified clay pipe shall be of the flexible compression type meeting the minimum requirements of the current specification of the American Society for Testing Materials, Designation: C425-66T, as currently amended.

Joints in polyvinyl chloride pipe shall be of the mechanical compression type using an elastomeric gasket joint, furnished with the pipe by the pipe manufacturer.

Couplings connecting dissimilar pipe shall be of the mechanical compression type, such as "band seal," "calder," "ceramic-weld," or approved equal.

Cement joints will not be permitted. Other jointing materials and methods may be used only on approval of the City Engineer.

Sec. 6-4.443(6). Building sewer connection to public sewer.

The connection of the building sewer into the public sewer shall be made in the following manner:

If the diameter of the building sewer is equal to the diameter of the public sewer, connection shall be made at a wye branch in the public sewer at a location specified by the City Engineer.

When the diameter of the building sewer is less than the diameter of the public sewer and no properly located wye branch is available, a neat hole may be cut into the public sewer to receive the building sewer and shall be fitted with a special saddle connection. The saddle connection shall be equipped with complete annular shoulder to prevent it from slipping into the public sewer, it shall protrude into the wall, but shall not exceed past the inner surface of the public sewer. The saddle adapter shall be securely fastened in place by a minimum of four (4) complete turns of 10 gauge galvanized iron or copper wire wrapped entirely around the saddle and the public sewer. A smooth neat joint shall be made and the annular space between the spigot of the saddle and the edges of the hole in the public sewer shall be filled with cement mortar, and the entire connection made secure and watertight by encasement in concrete.

Other special fittings may be used for connection only when approved by the City Engineer.

The top of pipe of the building sewer at the point of connection shall be at the same or at a higher elevation than the top of pipe of the public sewer.

EXCEPTION. Interceptor sewers of reinforced concrete pipe eighteen (18) inches or larger in diameter may not have direct connections. The building sewer shall then be connected to an eight (8) inch main laid parallel to the interceptor and connected at the nearest manhole.

The portion of the building sewer in the street shall be at right angles to the right of way lines and at least three (3) feet below the curb grade. Provided that when it is necessary to install a building sewer in the street less than three (3) feet below the curb grade, the same must be covered with at least six (6) inches of concrete to protect the same from breakage, or shall be of cast iron pipe.

The applicant for the building sewer permit shall notify the City Engineer when the building sewer is ready for inspection and connection to

3. That the Town be granted access as needed to monitor discharge from the unauthorized connection.

In addition to implementing abatement actions described above, the user shall pay all Town costs related to locating and abating the unauthorized discharge. The user shall also pay all Town costs related to any process upset or interference, or exceedence of permitted discharge limits.

The Town may, at its discretion, require that the user pay all costs of collection, treatment, and disposal of estimated wastewater discharged from the unauthorized connection, in rates in effect at the time that the connection is detected. In addition to the normal sewer service charges, the user will pay an additional 50 percent surcharge. The Town shall determine the estimated quantity of wastewater discharged for purposes of billing.

If the user elects to apply for a permit to connect the unauthorized sewer connection to the public sewer within twelve months of detection, the user shall pay double all fees, including permit and connection fees, at the rates in effect at the time the connection is permitted, provided that the Town approves and permits such a connection.

The foregoing does not preclude the Town's pursuit of other remedies permitted under the law, including legal action and monetary fines.

Sec. 6-4.445. Sewer service charges.

For the privilege of using the sewage collection and treatment system, the User shall pay service charges to cover the costs of operating and maintaining the sewer collection and treatment system, including replacement. Sewer service charges shall take into account the demands placed on the system by users. Sewer service charges shall be adopted from time to time by resolution of the City Council.

Sec. 6-4.445(1). Basis of charge for sewer service.

Except as hereinafter provided, sewer service charges shall be based on the estimated cost for collecting and treating wastewater discharged into the public sewer system and the capital cost of replacing the process elements and facilities of the wastewater treatment plant and the existing sanitary sewer collection system.

The basis for determining the cost for treating and collecting wastewater will be the "service unit" which will be considered for the purpose of this article to be the basic charge for each premises computed on the basis of treating wastewater for the typical single family residence. The unit cost per service unit for sewer service fees shall be as specified from time to time by resolution of the City Council.

Sec. 6-4.445(2). Review of rates.

The rates for the sewer service charges shall be reviewed each year in preparation for the annual budget by the City Council to assure the collection of sufficient revenue to defray all expenses incurred in the maintenance and operation of the sewage treatment and collection facilities of the Town.

ADOPTED at a regular meeting of the City Council of the Town of Los Altos Hills held the 15th day of September, 2005, by the following votes of the members of said City Council.

AYES: Mayor Kerr, Mayor Pro Tem Warshawsky, Councilmember Jones, Councilmember Mordo and Councilmember O'Malley

NOES: None

ABSTAIN: None

ABSENT: None

By: _____
Mayor

ATTEST:

_____
City Clerk

Appendix B – Document 2
City of Palo Alto and City of Los Altos Discharge Agreement

City of Los Altos Discharge Agreement

AGREEMENT BETWEEN THE CITY OF LOS ALTOS AND THE TOWN OF LOS ALTOS HILLS FOR TRANSPORTATION, TREATMENT AND DISPOSAL OF SEWAGE

This agreement is made and entered into this 26th day of January 2007 by and between the **CITY OF LOS ALTOS**, hereinafter called "CITY," and the **TOWN OF LOS ALTOS HILLS,** hereinafter called "TOWN."

RECITALS

A. CITY is a partner of the Palo Alto Regional Water Quality Control Plant, hereinafter called "PARWQCP," and has constructed a sanitary sewer system within CITY, and a trunk main from CITY to a flow metering station located at or near the former Los Altos sewage treatment plant property at 1275 North San Antonio Road, Los Altos, CA.

B. CITY and TOWN are parties to an agreement, dated March 26, 1985 and amended June 24, 1993 (copies of which agreement and amendment are attached hereto as Exhibit A and Exhibit B), that, in part, provides for the transportation, treatment, and disposal of sewage emanating from a portion of the TOWN known as the "LOS ALTOS BASIN" ("the Previous Agreement").

C. The Previous Agreement limited the number of residential sewer connections, or "capacity units," to 1,100. A "capacity unit" was defined as the total flow generated from each single family residential connection, which was 300 gallons per day. Thus, it was estimated that upon the connection of all 1,100 residential units the TOWN would discharge approximately 330,000 gallons per day.

D. All 1,100 capacity rights available to residents and property owners in the TOWN have been acquired, but only approximately 900 connections to the system have been made.

E. When all 1,100 capacity rights had been acquired, it imposed a de facto moratorium on new sewer connections, since no capacity rights were available. Therefore, on March 13, 2001, and on February 15, 2006, the parties entered into agreements, which, as an interim measure, allowed the TOWN to authorize, respectively, 125 capacity units and 25 capacity units, for a total of 1,250 capacity units. In exchange, TOWN agreed to accept responsibility for any liability associated with the additional capacity rights acquired in the TOWN

F. The parties now desire, pursuant to the terms and conditions set forth in this Agreement, to alter their relationship to an arrangement whereby the TOWN is entitled to discharge 339,900 gallons per day, as measured by to-be-installed flow meters, to the CITY's sewer system (notwithstanding the number of capacity rights previously issued either by the TOWN or the CITY) and whereby the TOWN will allocate capacity rights and sewer connections among the residents and property owners in the TOWN.

NOW, THEREFORE, IT IS HEREBY AGREED AS FOLLOWS:

1. Effect of Agreement; Term.

(a) The Previous Agreement had limited the amount of flow from the TOWN by limiting the number of capacity units available. This agreement instead allocates a certain amount of flow to the TOWN, which will be measured by to-be-installed flow meters, and permits the TOWN to allocate that flow among its customers in any manner it sees fit

(b) This agreement shall supersede all previous joint sanitary sewerage system maintenance and operations agreements and amendments thereto that have been entered into between the parties. Said agreements are hereby terminated as of the Effective Date.

(c) This agreement shall commence on January 26, 2007 ("the Effective Date") and shall continue thereafter from year to year until termination by either party hereto. Either party may terminate this agreement by providing notice. Termination will be effective three (3) years from the date of notice.

2. TOWN'S Responsibilities Concerning Capacity Rights

(a) Under the Previous Agreement, some residents and property owners in the TOWN had purchased capacity units from CITY. TOWN hereby accepts responsibility for, and any liability associated with, all sewer capacity rights purchased and fees paid by customers in the TOWN's Urban Service Area prior to the Effective Date, with the exception of any sewer capacity right within the area served by the Summerhill Avenue main as shown on Exhibit C. CITY shall provide copies to TOWN of all records in its possession relating to the sale of sewer capacity rights to customers in TOWN's Urban Service Area. TOWN agrees to defend and hold harmless CITY from all actions taken against CITY relating to the transfer of these capacity rights to TOWN and for all claims arising from the prior issuance of permits and capacity rights and fees collected. Following the Effective Date, TOWN shall be solely responsible for allocating sewer capacity rights and issuing sewer connection permits for connections to TOWN's sewer system. TOWN will provide a summary and supply CITY copies of all sewer permits issued, including number of connections, number of living units for each connection, and new second living unit permits issued for current connections.

3. Ownership, Maintenance, and Regulation of Collection Systems.

(a) Except as noted below, TOWN shall continue to own those portions of the sewer system within TOWN and within its Urban Service Area , and ownership of all CITY-owned sewer facilities (including pipes and other appurtenances) within TOWN and within its Urban Service Area hereby transferred from CITY to TOWN. By July 1, 2007, CITY shall deed (or otherwise provide a permanent right to use) any easements and rights-of-way in which the CITY-owned facilities exist to TOWN. In the meantime, CITY hereby grants an irrevocable license to TOWN for the purposes of operating and maintaining the existing sewer facilities.

(b) Notwithstanding the previous subsection, the following facilities within the TOWN's Urban Service Area shall be owned by CITY and not by the TOWN, and to the extent the facilities are presently owned by TOWN they shall be transferred to CITY.

(i) The sewer mains and appurtenances thereto, exclusive of mains and laterals serving TOWN residents and entering from TOWN, that lie within Summerhill Avenue and that portion of Magdalena Avenue between Summerhill Avenue and Hillview Avenue shall vest in and be the property of CITY. The location and property served by these sewer mains are shown on Exhibit C.

(ii) All easements and rights of way and the pipes and appurtenances thereto, exclusive of laterals serving TOWN residents, in the El Monte Trunk Sewer as defined by City Project No. 1959-8 running from University Avenue in CITY southerly through TOWN to the intersection of Moody Road and Elena Road. The location and property served by these sewer mains are shown on Exhibit D.

(iii) All easements and rights of way and the pipes and appurtenances thereto, exclusive of laterals serving TOWN residents, in the Adobe Creek Sewer as defined by City Project No. 1962-18 running generally along Adobe Creek downstream of O'Keefe Lane and Upstream of West Edith Avenue, shall vest in and be the property of CITY. The location and property served by these sewer mains are shown on Exhibit E.

(iv) The sewer mains and appurtenances thereto, exclusive of laterals serving TOWN residents, that lie within O'Keefe Lane easterly of Adobe Creek shall vest in and be the property of CITY. The location and property served by these sewer mains are shown on Exhibit F.

(c) By July 1, 2007, TOWN shall deed (or otherwise provide a permanent right to use) any necessary easements and rights-of-way in which the transferred TOWN-owned facilities exist to CITY. In the meantime, TOWN hereby grants an irrevocable license to CITY for the purposes of operating and maintaining the existing sewer facilities within the CITY.

The portions of the sewer collection system within TOWN's Sphere of Influence owned by TOWN are hereinafter referred to as "the TOWN Collection System," and the portions of the sewer collection system within TOWN's Sphere of Influence owned by City and the sewer collection system within CITY and CITY's Sphere of Influence are hereinafter referred to as "the CITY Collection System."

(d) CITY shall continue to be the sole provider of sewer service to Foothill College and shall be responsible for all billings for said service. City will fund the design, construction and maintenance of flow meters to measure flow emanating from Foothill College.

(e) Effective July 1, 2007, TOWN will assume responsibility for maintenance and operation of the TOWN Collection System. Until July 1, 2007, CITY will bill TOWN for the maintenance and operation of the TOWN Collection System based on the terms and conditions of the Previous Agreement. CITY shall cease such billing upon TOWN's assumption of maintenance responsibilities of the TOWN Collection System on July 1, 2007.

(f) Effective July 1, 2007, TOWN will assume responsibility for making all necessary arrangements with Santa Clara County to distribute TOWN's sewer user fees to the TOWN. Until such time, CITY shall make such arrangements as had been made under the Previous Agreement and bill TOWN under the terms and conditions of the Previous Agreement.

(g) TOWN shall be responsible for complying with all local, state, and federal regulations related to the TOWN sewer collection system.

4. Right to Discharge. The TOWN's existing right to discharge into CITY's sewer lines domestic sewage emanating from the LOS ALTOS BASIN, which is the territory shown on Exhibit G, attached hereto and incorporated herein by reference, and which includes territory both within and without the TOWN, shall continue and be subjected to all conditions, limitations, restrictions, terms and provisions contained in this Section.

(a) Maximum Allowable Volume of Discharge. TOWN shall be allowed 339,900 gallons per day total flow ("the Maximum Daily Flow"), or 124.06 million gallons per year ("the Maximum Annual Flow"), as measured by the combination of all flow meters in the LOS ALTOS BASIN, excepting the flow meters installed by CITY to measure flow from Foothill College. This total flow amount is inclusive of base sanitary flow, groundwater infiltration, and rainfall dependent infiltration and inflow. When the sewage flow from the LOS ALTOS BASIN reaches eighty percent (80%) of the allowable maximum volume of discharge, TOWN agrees to notify CITY and to perform an engineering study (Master Plan) to address future capacity needs, which shall include implementation systems to meet the future capacity needs. TOWN and CITY shall agree upon the scope of work for the engineering study (Master Plan) prior to beginning the study.

(b) Wet Weather Flow Allowance. TOWN will be allowed to exceed the maximum allowable daily flow during wet weather periods in the same proportion as CITY wet weather flow exceeds CITY dry weather flow during the wet weather flow periods. The proportional allowance shall be determined by comparing CITY flow during the wet weather periods versus CITY dry weather flow from the previous summer months, both of which shall be measured at the metering station at the PARWQCP. CITY dry weather flow base line will be established by using the average flow volume during the months of July through September as measured by the metering station at the PARWQCP.

(c) The formula used to determine the TOWN's wet weather flow allowance shall be:

$$\frac{\text{TOWN daily wet weather flow}}{\text{TOWN'S Maximum Daily Flow}} \quad < \text{or} = \quad \frac{\text{CITY daily wet weather flow}}{\text{CITY avg. daily flow (July through Sept.)}}$$

This wet weather flow allowance does not provide the TOWN with any additional right to capacity, and TOWN is not permitted to exceed its Maximum Annual Flow of 124.06 million gallons per year.

(d) TOWN Limitation on Sewer Connection and/or Sewer Connection Permits if Maximum Allowable Flow is Exceeded. If TOWN exceeds (a) the Maximum Daily Flow on any day during a non-wet weather period, (b) the Maximum Daily Flow plus the wet weather flow allowance during a wet weather period, or (c) the Maximum Annual Flow, TOWN will immediately suspend the issuance of sewer connections and/or sewer connection permits

from the date the Maximum Daily Flow or Maximum Annual Flow is exceeded until the flow volume is less than or equal to the maximum allowable flow. Financial penalties for exceeding the Maximum Daily Flow or Maximum Annual Flow will not be assessed unless sewer connections and/or sewer connection permits are allowed by TOWN during the period in which the Maximum Daily Flow or Maximum Annual Flow is exceeded.

(e) Financial Penalty for Exceeding Maximum Allowable Volume of Flow. If TOWN allows new connections to the sewer system and/or issues sewer connection permits during the period in which the Maximum Daily Flow or Maximum Annual Flow is exceeded, TOWN will pay a fine as outlined in the table below, and 100% of actual costs associated with exceeding capacity including, but not limited to, additional treatment costs, entire cost of upsizing mains, entire cost of fines and/or penalties from the PARWQCP, including any fines and/or penalties from any state or federal agencies, and notwithstanding paragraph 12, TOWN shall be responsible for indemnifying, defending and holding harmless CITY for claims arising from overflows caused by TOWN's excessive sewage discharge. Penalties will begin accruing from the date that the Maximum Daily Flow or Maximum Annual Flow is exceeded and will cease when the flow volume is less than or equal to the Maximum Daily Flow or Maximum Annual Flow.

Days of Exceeding Max. Allowable Flow	**Daily Financial Penalty**
0-90 days	Double the cost of sewage treatment[1] per day
90-180 days	Four times the cost of sewage treatment[1] per day
More than 180 days	Eight times the cost of sewage treatment[1] per day

Note 1. Cost of sewage treatment per day will be the total of sewage treatment costs for the preceding six months divided by 182.5 days.

If the Town exceeds its maximum allowable flow volume at any time during the first six months from the time that flow meter data is available from the metering stations, the City will allow the Town to correct the flow violation and waive any financial penalties accrued during this period. Financial penalties will be imposed if necessary following the initial six month period that the flow meters are in operation.

(f) Notwithstanding the provisions of this Section 4d. above, TOWN will not be assessed financial penalties for exceeding maximum allowable flow volume prior to January 1, 2009.

(g) Cost of Sewage Treatment. CITY shall bill TOWN for the actual costs of treatment of TOWN flow based upon measured flow from metering stations ("TOWN Costs of Treatment"). Actual costs of treatment shall include all costs that PARWQCP bills CITY including, but not limited to plant operations and maintenance, minor and major capital improvements, source control program, public outreach, permitting and enforcement, and bond debt service ("Total Costs of Treatment"). TOWN Costs of Treatment shall be determined by the following formula based on the billing period:

TOWN Cost of Treatment = (TOWN flow/Total flow CITY and TOWN at master meter) multiplied by (Total Cost of Treatment based on PARWCQP billings)

5. Acquisition of Additional Flow Capacity. In the event that TOWN requires additional flow capacity, TOWN will be responsible for securing the additional capacity from one or more of the partners in the PARWQCP, that is, the City of Palo Alto or the City of Mountain View. Any agreement between TOWN and one or more of the PARWQCP partners which transfers capacity for the TOWN's use will be accepted by CITY as part of their PARWQCP partnership ratio. Said capacity will be added to the maximum allowable volume of discharge established in Section 4 for the exclusive use of TOWN following mutual written agreement of the PARWQCP partner cities and amendment of this agreement.

6. Measurement of Volume of TOWN Flow. TOWN Flow shall be measured continuously at flow meter stations where TOWN sewage flow enters CITY's collection system.

(a) CITY will design, construct, operate and maintain flow metering stations at the following locations:

(i) Eastbrook Avenue/Westbrook Avenue

(ii) Putter Way/Niblick Avenue at I-280,

(iii) O'Keefe Lane at El Monte Road,

(iv) Summerhill Avenue at Magdalena Avenue,

(v) Edith Avenue at City Limits,

(vi) West of Pine Lane Lift Station near Foothill Expressway. This flow meter will be eliminated if TOWN transfers flow anticipated at this location to the City of Palo Alto collection system.

CITY will provide TOWN with data from the meters and, upon request, provide TOWN with the ability to verify calibration of meters.

(b) TOWN will fund costs of design, construction, operation, and maintenance of the flow metering stations. Within 30 days of execution of this agreement, TOWN shall deposit with CITY an amount not less than $50,000 for design of the flow metering stations. Any unused portion of this amount will be used to fund the construction, inspection, and contract administration of the flow meter installations. If there is a shortfall of funds for design, CITY will notify TOWN of the shortfall. TOWN will remit shortfall to CITY within 30 days of notification. Within 30 days of construction contract bid opening, TOWN shall deposit with CITY an amount equal to 100% of the lowest responsible bidder amount plus an additional 20% of the bid amount to fund construction contingencies (in an amount estimated at 10% of bid amount) and construction inspection and administration (in an amount estimated at 10% of bid amount). Any unused TOWN funds will be returned to TOWN following acceptance of the project and release of retention. TOWN will remit any funding shortfall for total project costs to

CITY within 30 days of notice and invoice. TOWN shall be permitted to inspect CITY project accounting documents at TOWN's request.

(c) For each day TOWN fails to meet the schedule or milestones set forth in Section 6.b above and Section 7.a.i below, TOWN shall be subject to the daily penalties set forth below:

Schedule Lapse	Daily Financial Penalty
0-90 days	Two times the daily TOWN Cost of Treatment per day
90-180 days	Four times the daily TOWN Cost of Treatment per day
More than 180 days	Eight times the daily TOWN Cost of Treatment per day

7. Joint-Use and Parallel Mains. There currently exist a number of sewer mains in and owned by the City that carry flow of both CITY and TOWN. These sewer mains are referred to as "Joint Use Mains." The term Joint-Use Main shall also include associated appurtenances such as manholes.

(a) New or Parallel Sewer Mains. Parallel sewer mains or new sewer mains will be installed to minimize the number of meter stations and separate CITY and TOWN flow currently carried in Joint-Use Mains.

(i) Within 18 months of the Effective Date, TOWN shall install a parallel and/or new sewer main at the following location:

(1) Eastbrook Avenue between Mora Drive and southeast end of Eastbrook.

(ii) CITY shall install parallel and/or new sewer mains at the following locations

(1) Magdalena Avenue between Summerhill and easement main west of Hillview Road.

(b) Maximum TOWN Flow in Joint Use Mains. If the capacity of a joint use sewer main is exceeded as a result the flow contribution from TOWN, TOWN will be responsible for 100% of costs for increasing the size of the joint use main to accommodate the current and future projected flow from TOWN. TOWN flow will be determined by measuring actual flow as determined by the nearest upstream meter(s). Maximum allowable TOWN flow will be determined by calculating the maximum flow capacity of the main and subtracting the calculated maximum future CITY flow, including peaking factor based on General Plan projects for CITY "build out" (as of the Effective Date) at and upstream of the problem area. TOWN shall hold CITY harmless for all claims and local, state, and federal regulatory penalties arising from any sanitary sewer overflow resulting from TOWN's flow exceeding the capacity of a joint use main.

8. Operation, Repair, and Maintenance of City-Owned Facilities.

(a) Cost of Operation and Maintenance of CITY-Owned Facilities. When all flow meter stations and parallel mains, required to be installed by Sections 6.a and 7.a, become operational, operation and maintenance costs for the collection system within CITY that carries sewage from CITY and TOWN (including flow meter stations) shall be invoiced on a quarterly basis for remittance by TOWN. The amount invoiced shall be equal to fifty percent (50%) of TOWN Costs of Treatment (as determined pursuant to Section 4 e above) during the billing period. CITY shall have the right to renegotiate or terminate the agreement if CITY's operating costs exceed 50% of TOWN Costs of Treatment. Prior to all flow meter stations and parallel mains, required to be installed by Sections 6.a and 7.a, become operational, CITY shall bill TOWN for operation and maintenance of CITY-owned facilities pursuant to the Previous Agreement.

(b) Repair of Joint-Use Mains. CITY shall be responsible for the repair of Joint-Use Mains. Repairs under $10,000 shall be considered minor, and the costs of such minor repairs shall be deemed included in the fee collected pursuant to Section 8.a above. Repairs to Joint-Use Mains over $10,000 will be considered Capital Improvements, and the costs of such repairs will be shared in accordance with Section 8.d below.

(c) Maintenance and Repair of Lift Stations. Maintenance and repair of Pine Lane lift station shall be the responsibility of CITY. Maintenance and repair of O'Keefe lift station shall be the responsibility of TOWN. Costs for maintenance and repairs will be allocated to CITY and TOWN based on proportion of connections of each jurisdiction entering the lift station.

(d) Capital Improvements. Capital Improvements are defined as repair or construction work on sewer mains, manholes, or lift stations that are equal to or greater than $10,000 in cost.

(i) CITY shall be responsible for design and construction of all capital improvements for Joint-Use Mains within CITY's sewer system. TOWN's cost share for improvements will be based on the proportion of metered flow of TOWN contribution as determined by the nearest upstream meter(s) of TOWN flow contributing to the sewer main and the total flow at the downstream location of the improvement. CITY will be responsible for measuring flow and determining the duration that the meter will be in place for such measurement. TOWN has the right to participate in the physical flow measurement and will be provided data from the flow measurement. TOWN's cost share will include direct costs for design, construction, inspection, and construction administration as well as CITY standard overhead charge.

(ii) TOWN shall deposit with CITY its share of design costs within 30 days of notification by CITY. Any unused portion of this amount will be used to fund the construction, inspection, and contract administration of the capital improvement. If there is a shortfall of funds for design, CITY will notify TOWN of the shortfall. TOWN will remit shortfall to CITY within 30 days notification. Within 30 days of construction contract bid opening, TOWN shall deposit with CITY their share of the lowest responsible bid amount plus

an additional 20% of their share of the bid amount to fund construction contingencies (in an amount estimated at 10% of bid amount) and construction inspection and administration (in an amount estimated at 10% of bid amount). Any unused TOWN funds will be returned to TOWN following acceptance of the project and release of retention. TOWN will remit any funding shortfall for total project costs to CITY within 30 days of notice and invoice. TOWN shall be permitted to inspect CITY project accounting documents at TOWN's request.

(iii) TOWN's share of costs for all capital improvements related to the PARWQCP will be paid for as part of the TOWN Costs of Treatment as determined in Section 4 e above.

(iv) If TOWN requests to increase the capacity of Joint-Use Sewer Main(s) to accommodate TOWN flow through CITY's system, CITY will be responsible for design and construction of the improvements. TOWN will fund 100% of capital improvement costs. CITY will prepare a request for proposal (RFP) to retain a qualified design consultant within 60 days of written notification by TOWN. If City fails to meet this schedule, CITY will be subject to a penalty to the daily penalties set forth Section 6 c above.

(v) TOWN shall be responsible for design and construction of all capital improvements on TOWN's sewer system. TOWN shall be responsible for 100% of the cost of capital improvements on sewer mains and manholes in the TOWN's sewer system.

(vi) CITY will provide TOWN a list of capital projects as it becomes available for projects that involve Joint-Use Mains.

9. Funding from Outside Sources. Each party agrees to cooperate with the other in applications for grants or funds from outside sources to cover expansion, repair, or maintenance of facilities covered by this agreement.

10. Limited Rights. Except as expressly provided herein, nothing contained in this agreement shall be deemed to give CITY or TOWN any ownership rights or any other right, title or interest in or to the other party's sanitary sewer system, or any part thereof.

11. Insurance. CITY and TOWN shall, at its own expense, maintain a program of self-insurance. CITY and TOWN shall be named as an additional insured.

12. Indemnification. In lieu of and notwithstanding the pro rata risk allocation which might otherwise be imposed between CITY and TOWN pursuant to Government Code section 895.6, CITY and TOWN agree that all losses or liabilities incurred by CITY or TOWN shall not be shared pro rata but instead CITY and TOWN agree that pursuant to Government Code Section 895.4, CITY and TOWN shall fully indemnify and hold each other, its officers, board members, employees and agents, harmless from any claim, expense or cost, damage or liability imposed for injury (as defined by Government Code Section 810.8) occurring by reason of the negligent acts or omissions or willful misconduct of CITY or TOWN, its officers, employees or agents, under or in connection with or arising out of any work, authority or jurisdiction delegated to such party under this Agreement. CITY or TOWN, or any officer, board, member, employee or agent thereof, shall be responsible for any damage or liability occurring by reason of the negligent acts or omissions or willful misconduct of CITY or TOWN, its officers, board

members, employees or agents, under or in connection with or arising out of any work authority or jurisdiction delegated to each other under this Agreement.

13. Notices. Any notices to be given under this Agreement by either party to the other shall be in writing and may be effected either by personal delivery or by mail, registered or certified, postage prepaid with return receipt requested. Mailed notices shall be addressed as follows:

CITY:

City Manager
City of Los Altos
One North San Antonio Road
Los Altos, CA 94022

TOWN:

City Manager
Town of Los Altos Hills
26379 Fremont Road
Los Altos Hills, CA 94022

14. Partial invalidity. If any provision of this Agreement is held by a court of competent jurisdiction to be invalid, void or unenforceable, the remaining provisions will nevertheless continue in full force without being impaired or invalidated in any way.

15. Binding. This Agreement shall be binding upon and shall inure to the benefit of the heirs, executors, administrators, assigns and successors-in-interest to the parties hereto.

16. No implied waivers. The failure of either party at any time to require performance by the other party of any provisions hereof shall not affect in any way the full right to require such performance at any time thereafter. Nor shall the waiver by either party of a breach of any provision hereof be taken or held to be a waiver of the provision itself.

17. Applicable law and forum. This Agreement shall be construed and interpreted according to the laws of the State of California in any action to enforce the terms of this Agreement or for the breach thereof, and shall be brought and tried in the County of Santa Clara, California.

18. Construction. To the fullest extent allowed by law, the provisions of this Agreement shall be construed and given effect in the manner that avoids any violation of statute, ordinance, regulation or law.

19. Integration. This Agreement, including the Exhibits listed in Section 20 below, supersedes any and all agreements, either oral or written, between the parties hereto with respect to the rendering of services by CITY for TOWN, and contains all the covenants and agreements between the parties with respect to the rendering of such services in any manner whatsoever. Each party to this Agreement acknowledges that no representations, inducements, promises or

agreements, orally or otherwise, have been made by any party or anyone acting on behalf of any party, which are not embodied herein, and that no other agreement, statement, or promise not contained in this Agreement shall be valid or binding. Any modification of this Agreement shall be effective only if it is in writing, signed by the party to be charged.

20. Exhibits. The exhibits to this Agreement consist of the following:

(a) Exhibit A. Sewer Agreement between the City of Los Altos and the City of the Town of Los Altos Hills, dated March 26, 1985.

(b) Exhibit B. First Amendment to Sewer Agreement between the City of Los Altos and the City of the Town of Los Altos Hills, dated June 24, 1993.

(c) Exhibit C. Diagram of TOWN area served by Summerhill Avenue Main

(d) Exhibit D. Diagram of TOWN area served by El Monte Trunk Sewer

(e) Exhibit E. Diagram of TOWN area served by Adobe Creek Sewer

(f) Exhibit F. Diagram of TOWN area served by O'Keefe Avenue Sewer

(g) Exhibit G. Diagram showing boundaries of Los Altos Basin within the Town of Los Altos Hills and its Sphere of Influence.

///

///

///

///

///

///

///

///

///

///

///

21. Quaterly Reports. TOWN shall continue to provide to CITY quarterly reports certifying the number of sewer connections and/or sewer connections permits issued by the TOWN.

IN WITNESS WHEREOF, the undersigned have caused this Agreement to be executed as of the date first written above.

CITY OF LOS ALTOS:

APPROVED AS TO CONTENT:

Public Works Director

APPROVED AS TO FORM
AND LEGALITY:

City Attorney

AGREED

City Manager

TOWN OF LOS ALTOS HILLS

APPROVED AS TO CONTENT:

Public Works Director

APPROVED AS TO FORM
AND LEGALITY:

City Attorney

AGREED

City Manager

SEWER AGREEMENT

BETWEEN

THE CITY OF LOS ALTOS

AND

THE CITY OF THE TOWN OF LOS ALTOS HILLS

The following is an agreement between the CITY OF LOS ALTOS, a Municipal Corporation, hereinafter referred to as "CITY", and the CITY OF THE TOWN OF LOS ALTOS HILLS, a Municipal Corporation, hereinafter referred to as "TOWN", specifying the terms by which CITY shall maintain certain sanitary sewer facilities within the TOWN and accept sewage from a portion of the TOWN:

RECITALS

1. On or about July 11, 1961, CITY and TOWN entered into an agreement providing for the transportation and treatment of sewage emanating from within a portion of the territorial limits of TOWN and for the normal maintenance of a portion of TOWN's system (herein called the "1961 AGREEMENT").

2. (a) CITY has purchased capacity in a Regional Waste Water Treatment Plant and has constructed a sanitary sewer system within CITY; and the plant and CITY system have sufficient capacity to handle sewage effluent from a portion of TOWN.
(b) TOWN has the potential of ultimately having approximately 2,100 sewer connections in its "Los Altos" drainage basin including unincorporated areas within this portion of TOWN's sphere of influence, and TOWN projects 1,100 total residential connections within said drainage basin during the next five years. Provided, however, in the event of added capacity becoming available as described hereinafter, connections up to a total of 1,500 could be committed.

3. The parties had authority to enter in to the 1961 AGREEMENT and have authority to enter into this substitute Agreement under the Joint Exercise of Powers Act, Title 1, Division 7, Chapter 5, Article 1 of the Government Code of California.

AGREEMENT

The parties hereby agree as follows:

1. Administration This agreement shall be administered by CITY, there being no necessity to establish a separate commission.

2. Right to Use The TOWN's existing right to discharge into CITY's

sewer lines domestic sewage emanating from within that portion of TOWN shown on Exhibit "D", attached hereto and incorporated herein by reference, shall continue and be subject to all conditions, limitations, restrictions, terms and provisions contained in this Agreement.

3. Interim Limit on Connections In order to maintain sewage flow from TOWN within limits of CITY's current capactiy rights at the treatment plant, TOWN shall be permitted to connect a maximum of 1,100 residential units, or their equivalent, as an interim limit of use. The total number of connections could be adjusted up to 1,500 if the CITY's capacity rights are increased as a result of the purchase of additional capacity rights or correction of infiltration makes additional capacity available. This interim limit may be adjusted by mutual agreement of both parties by a written amendment to this Agreement. Under either or both of the following circumstances the interim limit shall be reviewed for adjustment; (1) when the number of residential units connected reaches 900; and (2) whenever changes in the capacity of the treatment plant are being proposed.

As of the execution of this agreement, of the 1100 units of capacity rights available to TOWN, approximately 970 units of capacity rights have already been acquired in CITY's sewer system by property owners in TOWN. TOWN has made no separate purchase of capacity rights from CITY and nothing in this agreement obligates TOWN to purchase capacity rights.

4. Regulation With respect to said sewage, TOWN shall adopt and enforce the regulations contained in Title 5, Chapter 5, Article 6 - Use of Public Sewers, of the City of Los Altos Municipal Code, and any subsequent revisions thereto.

5. Ownership of Sewers All easements and rights-of-way for main trunk sewers and collector systems and the pipes themselves and appurtenances thereto that presently vest in CITY that lie within the corporate limits of TOWN shall hereafter vest in and be the property of TOWN, EXCEPTING THAT:

(a) The sewer mains and appurtenances thereto, exclusive of laterals serving TOWN residents and exclusive of mains entering from TOWN, that lie within Summerhill Avenue and that portion of Magdalena Avenue northerly of Interstate 280 shall vest in and be the property of CITY.

(b) All easements and rights of way and the pipes and appurtenances thereto, exclusive of laterals serving TOWN residents, in the El Monte Trunk Sewer (City Project 1959-8) running from University Avenue in the City of Los Altos southerly through the Town of Los Altos Hills and Foothill College to the intersection of South El Monte Avenue with Moody Road, shall vest in and be the property of CITY.

(c) All easements and rights of way and the pipes and appurtenances thereto, exclusive of laterals serving TOWN residents, in the Adobe Creek Sewer (City Project 1962-18) running generally along Adobe Creek downstream of O'Keefe Lane and upstream of West Edith Avenue shall vest in and be the property of CITY.

(d) The sewer mains and appurtenances thereto, exclusive of laterals serving TOWN residents, that lie within O'Keefe Lane easterly of Adobe Creek shall vest in and be the property of CITY.

TOWN shall assume ownership of any sanitary sewer system, including easements, now or henceforth belonging to CITY in an unincorporated area at such time as TOWN annexes such unincorporated territory containing a CITY owned system excepting as set forth in Subparagraphs (a) through (d) above. Upon such annexation and assumption of ownership by TOWN, CITY shall provide TOWN with copies of available construction plans and other pertinent documents.

TOWN's sewer system within TOWN shall vest in and be the property of TOWN except as noted above.

6. Foothill College CITY shall continue to be the sole provider of sewer service to Foothill College and shall handle all billings for said service. The volume of sewage generated by the College shall not be included in computations relative to flow or capacity rights of TOWN.

7. Maintenance of Sewers CITY shall provide normal maintenance including, but not limited to, routine inspection, rodding, unplugging or flushing of the TOWN's system which connects to the CITY's system. Said normal maintenance shall pertain only to sewer mains and manholes. CITY shall have no obligation to maintain, repair or replace sewer laterals within TOWN.

8. Lateral Rodding Service In those cases where CITY maintenance forces have responded to a request to inspect a sewer main for possible stoppage in TOWN, said CITY forces will furnish a lateral rodding service provided that the following conditions are met:

(a) The request to rod the lateral is received while the CITY forces are in the immediate vicinity of the subject lateral.

(b) The lateral to be rodded is that portion within the street right of way.

(c) A sewer cleanout exists that is to grade, is accessible and is in immediate proximity to the street right of way line.

The purpose of the lateral rodding service shall be to determine if the lateral within the street right of way contains a blockage. If such a blockage is found and the rodding operation does not eliminate the blockage, CITY shall notify TOWN and any further action to eliminate the blockage shall be the responsibility of TOWN. Exhibit E, attached hereto and incorporated by reference, defines the limits for the sewer lateral rodding service.

9. Repair of Sewers The repair of sewer mains and manholes owned by TOWN shall be the obligation of TOWN. Whenever it is determined by CITY that a problem exists within the TOWN's sewer main system, exclusive of emergencies, which requires more than normal maintenance by CITY and which can be eliminated by performing the appropriate repairs, CITY shall notify the TOWN in writing, describing the problem, its location and a recommended course of action. Except in emergency situations, CITY shall have no obligation to make repairs to TOWN owned sewers. Only in emergency situations affecting the operation of the TOWN's sewer main system will CITY be obligated to perform repairs involving excavations and pipe replacement. An emergency is defined as a situation requiring immediate attention in order to keep the sewer line in service or to prevent a health hazard. CITY shall be under no obligation to make emergency repairs in cases where CITY has previously notified TOWN in writing of problems needing repair and TOWN has not taken corrective action within 60 days of receiving written notification.

10. <u>Sewer Service Charge</u> The annual sewer service charge shall reimburse CITY for its costs incurred in transporting and treating sewage emanating from TOWN and costs associated with maintaining and operating a portion of TOWN's sewer system, Pine Lane Lift Station, and certain shared sewer mains and truck lines. For the service and use to be provided by the CITY under terms hereof, CITY shall charge an annual sewer service charge to properties within the corporate limits of TOWN in accordance with Exhibit "C" attached hereto and incorporated herein by reference. Upon determining the amount of the annual sewer service charge for the next fiscal year, CITY shall notify TOWN in writing no later than May 15th of each year. The CITY may include the annual sewer service charges on the County property tax billings for properties within TOWN by submitting the individual charges directly to the County Tax Collector by CITY only after TOWN has had a reasonable opportunity to review the proposed annual sewer service charge. If the TOWN has not approved by resolution the amount of the proposed annual sewer service charge by June 15, of any year, CITY may process charges to Tax Collector subject to a mutually agreed upon adjustment to the following year's sewer service charge.

(a) Calculation of Sewer Service Charge It is mutually agreed that for each single family residential connection, a per connection flow rate of 300 gallons per day, as shown on Exhibit "C", will be used in determining the volume of sewage generated in the portion of TOWN served by CITY. The single family residential connection shall be the basic unit for determining annual charges. For all connections other than single family residential, the annual volume of sewage will be mutually agreed upon by CITY and TOWN, except where an agreement with the CITY already exists stipulating the method for determining either the annual charge or the annual volume of sewage. No later than June 1, 1987, the City Engineers of CITY and TOWN shall jointly review and establish criteria and methods to determine the connection flow rate in gallons per day as shown in Exhibit "C" per single family residential connection and shall jointly determine if a different volume of flow should be used for computing subsequent annual charges.

(b) Rate Adjustment Postponement Option CITY shall have the option to postpone to the following year the adjustment of the annual sewer service charge applied to properties in TOWN. However, any revenues lost or gained as a result of such a postponement shall be carried over and used in the computation of subsequent annual sewer service charges in such a manner that the net revenues to the CITY are essentially the same as if a postponement had not occurred.

11. Sewer Reserve Fund The annual sewer service charge shall include a charge for the TOWN's Sewer Reserve Fund at the written request of TOWN. The amount shall be established by TOWN and shall be included by CITY in the annual sewer service charge. CITY may decline to include reserve funds in years in which no rate changes are proposed but in the third consecutive year with no change, CITY shall include funds for reserve if so requested. Funds received by CITY are to be paid to TOWN by January 31 and May 31 in tax year collected.

12 Pine Lane Lift Station All of the costs related to operating the Pine Lane lift station shall be shared between CITY and TOWN based on the number of single family residential connections and equivalent single family connections served in each jurisdiciton. TOWN's proportionate share shall be included in the annual sewer service charge. In the event that TOWN is eventually able to physically divert its sewage away from the Pine Lane lift station, upon such diversion the TOWN's obligation to share in the costs of the lift station shall cease.

13. Minor Capital Improvements Included in the calculation of the above mentioned annual sewer service charge is an amount representing the cost of "minor" capital improvements at the Palo Alto Regional Water Quality Control Plant (RWQCP). Minor capital improvements are hereby defined as capital improvements which are

accomplished using funds shown in each year's operating budget for the Regional Water Quality Control Plant and identified as being for Minor Capital Improvements.

14. Major Capital Improvements Capital improvements at the RWQCP that are billed to the CITY by Palo Alto separately from the budgeted funds identified as being for Minor Capital Improvements shall be considered to be Major Capital Improvments.

(a) Share Payable by TOWN TOWN shall share in the actual costs to CITY of major capital improvements to the RWQCP as follows:

(1) When Revenue Bonds are used for financing capital improvements, the annual debt service shall be included in the annual Treatment Plant Expenses (Item 1 in Exhibit "C").

(2) For improvements that are financed by lump sum cash payments, CITY and TOWN shall mutually agree on the amount of TOWN's share and on the method of payment by a subsequent written agreement.

(b) Funding from Outside Sources Each party agrees to cooperate with the other in applications for grants or funds from outside sources to cover expansion, repair, or maintenance of facilities covered by this Agreement.

15. Approval of Sewer Main Extensions All sewer extensions involving mains and manholes within TOWN that are to be maintained pursuant to this Agreement shall be constructed in accordance with the CITY's Standard Specifications and in accordance with the minimum design standards of the CITY. Engineering plans for such sewer construction shall be sent by TOWN to CITY upon their receipt by TOWN. The City's Engineering Department shall promptly review such plans and submit comments thereon to the Los Altos Hills City Engineer. Final engineering plans for such sewer construction shall be approved by the Los Altos City Engineer prior to approval by the Los Altos Hills City Engineer.

16. Inspection of Sewer Main Extensions TOWN shall have the primary responsibility for the inspection and acceptance of sewer main extensions in TOWN. CITY retains the right to make construction inspections and to witness the balling and testing of all collector sewers constructed within TOWN if such sewers are to be maintained by CITY. CITY is to be notified when construction commences to assure the opportunity for inspections. CITY may reject responsibility for maintenance of sewer mains constructed without CITY's prior approval of construction plans or where the opportunity for inspections was not provided by TOWN.

17. Inspection of Sewer Lateral Construction TOWN shall have the primary responsibility for the inspection of individual sewer lateral construction in TOWN both on private property and in public rights of way. For laterals constructed in public rights of way or public sewer easements, TOWN shall provide CITY with information regarding exact location, date, and type of connection within ten (10) days of completion.

18. Connections to Existing CITY Maintained Sewers CITY retains the right to inspect all future direct connections to existing sewer mains maintained by CITY when such connections are being made. Not less than 24 hours advance notice of any proposed direct connection to a CITY maintained sewer main shall be furnished to CITY by TOWN prior to commencement of work on any such connection so as to provide CITY with the opportunity to inspect the actual connection to the sewer main.

19. Connections to CITY Owned Sewers CITY shall have the primary responsibility for the inspection of all connections made directly to sewer mains owned by CITY. The inspection of the sewer lateral construction, exclusive of the actual connection to the main, shall be as set forth in Section 17 above.

20. Backflow Prevention Devices TOWN shall require the installation of backflow prevention devices for all new sewer connections where the building served by the public sewer is so situated that

the lowest drain opening in the building is less than two (2) feet above the rim of the nearest upstream manhole. Such devices shall be installed so as to prevent the flow of sewage from publicly owned and maintained sewer mains into any building or structure.

21. Sewer Connection Permits Before connecting any individual dwelling or other structure in TOWN to any sewer facility that is or that eventually connects to a CITY maintained sewer, a CITY sewer connection permit must first be obtained for said connection from CITY. A sewer connection permit issued by the CITY shall be recognized as a TOWN sewer connection permit and the obtaining of a separate sewer connection permit from the TOWN shall not be required, except that the TOWN may notify the CITY in writing that after a specific date TOWN sewer connection permits must be obtained from the TOWN.

In order to obtain a CITY sewer connection permit, applicants must pay all appropriate fees established by CITY and TOWN. TOWN shall furnish CITY with all of its established fee schedules relating to sewers and shall send CITY written notification of any revisions affecting TOWN's sewer fees. CITY shall be responsible for collecting only those TOWN sewer fees that are in accordance with established fee schedules furnished to CITY by TOWN. TOWN fees shall be forwarded to TOWN by CITY on a quarterly basis. No administrative charge shall be applied to TOWN's fees.

TOWN shall send monthly reports of final building inspections, in the area covered by this contract including sewer hook ups, on primary and secondary dwellings to CITY to ascertain that all appropriate connections have obtained permits from CITY.

CITY sewer permit fees shall be collected in accordance with the Los Altos Municipal Code and this Agreement.

22. Fees Due Prior to Connection In addition to the sewer fees established by the TOWN, the following fees shall be paid to CITY by property owners or developers prior to issuance of a CITY sewer connection permit:

a. "Connection" fees shall be charged in accordance with Section 5-6.103 (a) (1) of the Los Altos Municipal Code plus an additional ten percent (10%). (Copy of current Municipal Code Section attached as Exhibit "A")

b. "Capacity Acquisition" fees shall be charged in accordance with City of Los Altos Resolution No. 84-52 (Exhibit "B" attached hereto) and any subsequently adopted City resolutions establishing a schedule of capacity acquisition charges. CITY shall not adopt any schedule of acquisition charges which would increase the charge ~~until TOWN has had a reasonable opportunity to review and comment on the proposed new schedule of charges~~. before the year 2000 without Town's prior approval. Thereafter City shall not adopt any schedule of acquisition charges until Town has had a reasonable opportunity to review and comment on the proposed new schedule of charges.

c. "In Lieu of Assessment" fees shall be paid to CITY by properties connecting to a CITY owned sewer main if that property was either not in an assessment district or was assessed for a lesser number of connections than is subsequently proposed. The amount of the fee shall be computed by the Los Altos City Engineer based upon the share of the cost of said sewer main and facilities the connecting property would have paid had it been assessed by an assessment district. Properties connecting to sewer mains constructed by Town administered assessment districts shall not be required to pay "In Lieu of Assessment" fees to CITY, but may be required to pay such fees to the TOWN if such fees have been established by TOWN.

23. Unpaid Fees Upon learning that any person in TOWN has connected to the sewer system without having paid all appropriate fees due TOWN and/or CITY under the terms of this Agreement, either party to this Agreement shall promptly notify the other and furnish any information concerning the connection and the identity of the person making the connection which the notifying party has obtained.

TOWN and CITY shall cooperate in efforts to collect unpaid sewer fees and TOWN shall make every reasonable effort to see that CITY is paid all appropriate sewer fees due from persons in TOWN.

24. Determination of Unreported Connections It shall be the responsibility of TOWN to control and manage sewer connections from properties within TOWN. In cases where CITY has reason to believe that certain properties in TOWN may be connected to the public sewer system, but such connections have not been adequately verified and reported to CITY, an investigation may be requested by CITY. Upon receiving such a request, TOWN shall promptly investigate the connection status of a subject property and shall verify whether or not the subject property is in fact connected to the public sewer system. CITY forces shall cooperate with TOWN in such investigations by performing dye tests and making other physical inspections under the supervision of TOWN.

TOWN shall cooperate with CITY regarding the adoption by TOWN of any appropriate ordinances concerning sewer fees and service charges which would enable CITY and TOWN to collect any unpaid monies from the owners of property in TOWN whose connection to TOWN's/CITY's sewer system is discovered after the connection was made.

25. Street Work The raising to grade of sewer manhole frames and covers, owned by TOWN, required in connection with street resurfacing projects within TOWN shall be accomplished promptly by TOWN.

26. Sewer Master Plan TOWN shall adopt a Master Plan for the present and future development of the collector system to serve the area of TOWN covered by this Agreement (area within TOWN's Sewer Assessment District No. 4 and area served by Pine Lane lift station) within three (3) years from the effective date of this Agreement. Future construction of sewers shall be in conformance with the Master Plan to assure adequacy of system design and maintenance.

27. Limited Rights Except as expressly provided herein, nothing contained in this Agreement shall be deemed to give CITY or TOWN any ownership rights or any other right, title or interest in or to the other party's sanitary sewerage system, or any part thereof.

28. Breach and Remedies

(a) Breach of Covenants In case of a breach or alleged breach on the part of either party in the performance of any of its obligations hereunder, notice of said breach shall be given to it in writing by the other party, delivered to the office of the Clerk thereof, or mailed to said office registered mail, postage prepaid, and said party shall have seventy-five (75) days from the date of delivery to cure said breach.

(b) Remedies

(1) Cumulative Each remedy conferred hereby or by the law shall be cumulative and may be exercised without regard to any other remedy conferred hereby or by the law.

(2) Waiver No waiver of any default or breach of duty or contract shall affect any subsequent default or breach of duty or contract or shall impair any rights or remedies herein.

(3) Delays No delay or omission to exercise any right or power accruing upon any default shall impair any such right or power or shall be constructed to be a waiver of any such default.

29. Term of Agreement The term of this Agreement shall commence on July 1, 1984, and shall continue thereafter from year to year until terminated by either party hereto. Either party may terminate this Agreement on June 30th of any year by the giving of at least six (6) months written notice to the other party.

30. Insurance CITY shall maintain insurance covering the operations of CITY, its equipment and personnel, both within the limits of CITY and the limits of TOWN, and said insurance policies shall provide that they may not be cancelled without thrity (30) days written notice to TOWN. TOWN shall maintain insurance covering the operations of TOWN, its equipment and personnel, both within

the limits of CITY and the limits of TOWN, and said insurance policies shall provide that they may not be cancelled without thirty (30) days written notice to CITY. The insurance carried by each party pursuant to this paragraph shall name the other party as an additional insured, and a certificate stating coverage shall be sent to each party yearly.

31. Indemnification TOWN and CITY agree to each defend, save and hold harmless the other municipal corporation, and its respective officers, agents and employees from and against any and all claims, demands, suits, causes of actions, orders, decrees, or judgements for injury, or death, or damage to person or property, loss, damage and liability (including all costs and attorney's fees incurred in defending any claim, demand or cause of action) regardless of the theory or basis upon which the same may be instituted or brought, occasioned by, growing out of, or arising or resulting from any negligent error, omission or act on the part of TOWN or CITY, or its respective agents or employees as a result of the performance by TOWN or CITY of any acts required to be performed by TOWN or CITY, as the case may be, under this Agreement.

32. Records Each party hereto shall have the right to audit the books and records of the other pertaining to the matters covered by this Agreement.

33. 1961 Agreement From and after the effective date hereof, the 1961 Agreement shall be terminated, suspended, and of no further force or effect.

34. General Provisions This writing constitutes the entire Agreement between the parties hereto and no oral modifications may be made. Any and all prior oral agreements between the parties have been incorporated in full into this Agreement. If any provision of this Agreement is held invalid, void or unenforceable by a court of competent jurisdiction, the remainder of the provisions shall remain in full force and effect and shall in no way be affected, impaired or invalidated. This Agreement may be modified only by an instrument signed and executed by duly authorized executives and ratified by respective City Councils of CITY and TOWN.

IN WITNESS WHEREOF, the parties hereto have executed this Agreement on the 26th day of March, 1985.

CITY OF LOS ALTOS

A Municipal Corporation,

ATTEST:

By Harry Kaushian

Mayor

City Clerk

APPROVED AS TO FORM:

Los Altos City Attorney

CITY OF THE TOWN OF LOS ALTOS HILLS,

A Municipal Corporation,

ATTEST:

City Clerk

By _____

Mayor

APPROVED AS TO FORM:

_____

Los Altos Hills City Attorney

Sec. 5-6.103. Connection charges.

(a) *Los Altos Sewer System.*

(1) Connection charges to connect to the Los Altos Sewer System for property located in the City limits shall be Ninety-Five and no/100ths ($95.00) Dollars per connection unit.

(2) Connection charges to connect to the Los Altos Sewer System for property located outside the City limits shall be One Hundred Ninety and no/100ths ($190.00) Dollars per connection unit unless another rate is specifically agreed upon prior to connection by resolution of the Council.

(b) *Capacity rights.* No charge shall be made by the City for connections to the sanitary sewer system where the property has been assessed for, and has paid, or a lien has been established for capacity rights in the system in connection with assessment proceedings conducted by the City. Such charge for capacity rights shall be at least equal to the amount which would otherwise be charged pursuant to this section for each connection unit. Any connections over and above the number charged for the parcel in the assessment proceedings shall be paid, prior to issuance of a permit, in accordance with the then established connection charge.

(c) *Determination of connection units.* Connection units shall be determined in accordance with the following schedule:

Type of Connection	*Number of Connection Units*
Residential	1 per residence, residential unit, or apartment
All other	1 plus 1 additional unit for each 10 plumbing fixtures or fraction thereof over 10 ("plumbing fixtures" shall be as defined in the Uniform Plumbing Code)

(d) *St. Joseph Sewer System.* Connection charges for connections to the St. Joseph Sewer System and tributary sewers covered by reimbursing contracts, including, but not limited to, the Vista Los Altos Sewer System, shall be as follows:

(1) For each single-family residence connection, Ninety-Five and no/100ths ($95.00) Dollars;

(2) For other than residence connections, Two Hundred Fifty and no/100ths ($250.00) Dollars per acre, or fraction thereof;

(3) In the event such system is used as a collector by the individual connecting, an additional connection charge of Two and no/100ths ($2.00) Dollars per lineal foot of frontage shall be made for each connection from property directly fronting on such sewer line extension; provided, however, the minimum charge for each connection with any such property having a frontage of eighty (80′) feet or less shall be One Hundred Sixty and no/100ths ($160.00) Dollars; the maximum charge for each connection with any such property having a frontage greater than eighty (80′) feet but less than 200 feet shall be Four Hundred and no/100ths ($400.00) Dollars; and the charge for each connection with any such property having a frontage of more than 200 feet shall be fixed by negotiation at the time of connection. In the event any system or tributary is used as a trunk rather than as a collector, the only charge shall be Ninety-Five and no/100ths ($95.00) Dollars for each single-family residence connection or for all others Two Hundred Fifty and no/100ths ($250.00) Dollars per acre, or fraction thereof.

(§§ 3, 4, Ord. 138, as amended by § 2, Ord. 323, eff. June 24, 1965, and § 1, Ord. 350, eff. April 21, 1966)

RESOLUTION NO. 84- 52

EXHIBIT "B"

A RESOLUTION OF THE CITY COUNCIL OF THE CITY OF LOS ALTOS ESTABLISHING A SCHEDULE OF SEWER CAPACITY ACQUISITION CHARGES

WHEREAS, the City of Los Altos by virtue of Resolution 67-52 has indicated its willingness to accept connections for sewer service from outside its incorporated limits, and

WHEREAS, the City of Los Altos by virtue of Resolution 69-7, a copy of which is hereto attached as Exhibit 'A', established a schedule of capacity acquisition charges for sewer service, and

WHEREAS, said schedule does not specify amounts beyond 1984, and

WHEREAS, the City of Los Altos will continue to accept connections for sewer service from outside its incorporated limits beyond 1984.

NOW, THEREFORE, BE IT HEREBY RESOLVED that, in equity, the following schedule of capacity acquisition charges for the calendar years through 2000 be adopted:

Calendar Year	1985	$ 713.20
	1986	784.52
	1987	862.97
	1988	949.26
	1989	1,044.19
	1990	1,148.61
	1991	1,263.47
	1992	1,389.82
	1993	1,528.80
	1994	1,681.68
	1995	1,849.85
	1996	2,034.83
	1997	2,238.31
	1998	2,462.15
	1999	2,708.36
	2000	2,979.20

* * * *

I HEREBY CERTIFY that the foregoing Resolution was adopted by the Council of the City of Los Altos at a meeting of said Council held on the 17th day of July, 1984, by the following roll call vote:

AYES: Mayor Kallshian, Councilmen Cullinan, Eng, Verlot, and Councilwoman Reed

NOES: None

ABSENT: None

Harry Kallshian
Mayor

DRAFT 1/7/85

EXHIBIT "C"

DETERMINATION OF ANNUAL SEWER CHARGES FOR TOWN OF LOS ALTOS HILLS

The CITY shall prepare an estimate of costs no later than May 15 of each year for the purpose of determining the annual charge for sewer service in TOWN for the following fiscal year (July 1 - June 30). The background for the cost estimation and the proposed Resolution fixing the annual charge shall be submitted to TOWN. CITY shall notify TOWN if no rate adjustment is to occur. When a delay occurs in receiving information from the City of Palo Alto, CITY shall submit the information available and shall furnish the Palo Alto information when received. For purposes of the historical cost data relative to Items 3 and 4, prior service years shall cover the period of April 1 through March 31, and TOWN shall be notified if any changes in these dates are proposed.

This estimate will include the following seven items:

ITEM 1 - TREATMENT PLANT EXPENSES

Annual Treatment Cost per Unit = 300 gal. per day X 365 days X cost of treatment per gal.*

*Cost of treatment per gallon shall be based on estimates prepared by the City of Palo Alto and shall be on the total estimated treatment cost to Los Altos divided by the total estimated flow from the Los Altos service area.

The projected cost per unit shall be adjusted by the difference between the actual and estimated cost per unit for the previous complete fiscal year (for example, in computing the cost for FY 85-86 in May of 1985, the adjustment will be based on the difference between actual and estimated costs for FY 83-84).

ITEM 2 - TRUNK SEWER MAINTENANCE COSTS

Annual Trunk Maintenance Cost per Unit = $\frac{\text{300 gal/day}}{\text{Total Trunk Flow per day}}$ X Estimated total annual trunk maintenance cost*

*Cost to be estimated by Los Altos City Engineer and identified in each year's operating budget.

ITEM 3 - COLLECTION SYSTEM MAINTENANCE COSTS

Cost of collection system maintenance in TOWN shall be based on actual services provided.

$$\text{Cost of Collection System Maintenance per Unit} = \frac{1}{\text{Total No. of Town Units}} \times \text{Estimated collection system maintenance cost in TOWN*}$$

*Based on hours of service and at an hourly rate including labor, fringe benefits, equipment, materials, and incidental services. The hourly rate shall be determined each year by the Los Altos City Engineer and shall be identified in the CITY's operating budget.

The number of hours of service shall be estimated by averaging the hours of service for the previous three years. In years prior to FY 82-83, the hours of service shall be estimated and from FY 82-83 and beyond, actual time records of hours of service will be used. If in the previous service year the City incurred "outside" costs (i.e. emergency repair work by contractors, sewage backup damages, etc.), the maintenance cost estimate based on hours of service shall be adjusted so as to reimburse the CITY for "outside" costs.

ITEM 4 - PINE LANE LIFT STATION EXPENSES

$$\text{Cost of Pine Lane Lift Station per Unit} = \frac{1}{\text{Total Number of TOWN units}} \times \frac{\text{No. of TOWN units through station}}{\text{Total Units through station}} \times \text{Estimated annual cost of maintenance and operation*}$$

*Cost to include labor, fringe benefits, equipment, materials, electricity, alarm system costs, an allocation for future equipment replacement, and any other services directly related to the lift station. Labor hours shall be estimated using the average of the previous three years of actual hours of service.

ITEM 5 - INCIDENTAL COSTS

Item 5a - Engineering and Supervision

A fee of 7% of Items 1 through 4 shall be included in the annual charge for Engineering and Supervision.

Item 5b - General Overhead Expenses

A fee of 8% of Items 1 through 4 shall be included in the annual charge for General Overhead Expenses.

ITEM 6 - TOWN'S SEWER RESERVE FUND

The annual sewer service charge shall include a charge for the TOWN's Sewer Reserve Fund at the written request of TOWN. The amount shall be established by TOWN and shall be included by CITY in the annual sewer service charge. CITY may decline to include reserve funds in years in which no rate changes are proposed but in the third consecutive year with no change, CITY shall include funds for reserve if so requested. Funds are to be paid to TOWN by January 31 and May 31 in tax year collected.

SUMMARY

The total annual sewer service charge per unit for TOWN properties served by CITY shall be the sum of Items 1 through 6.

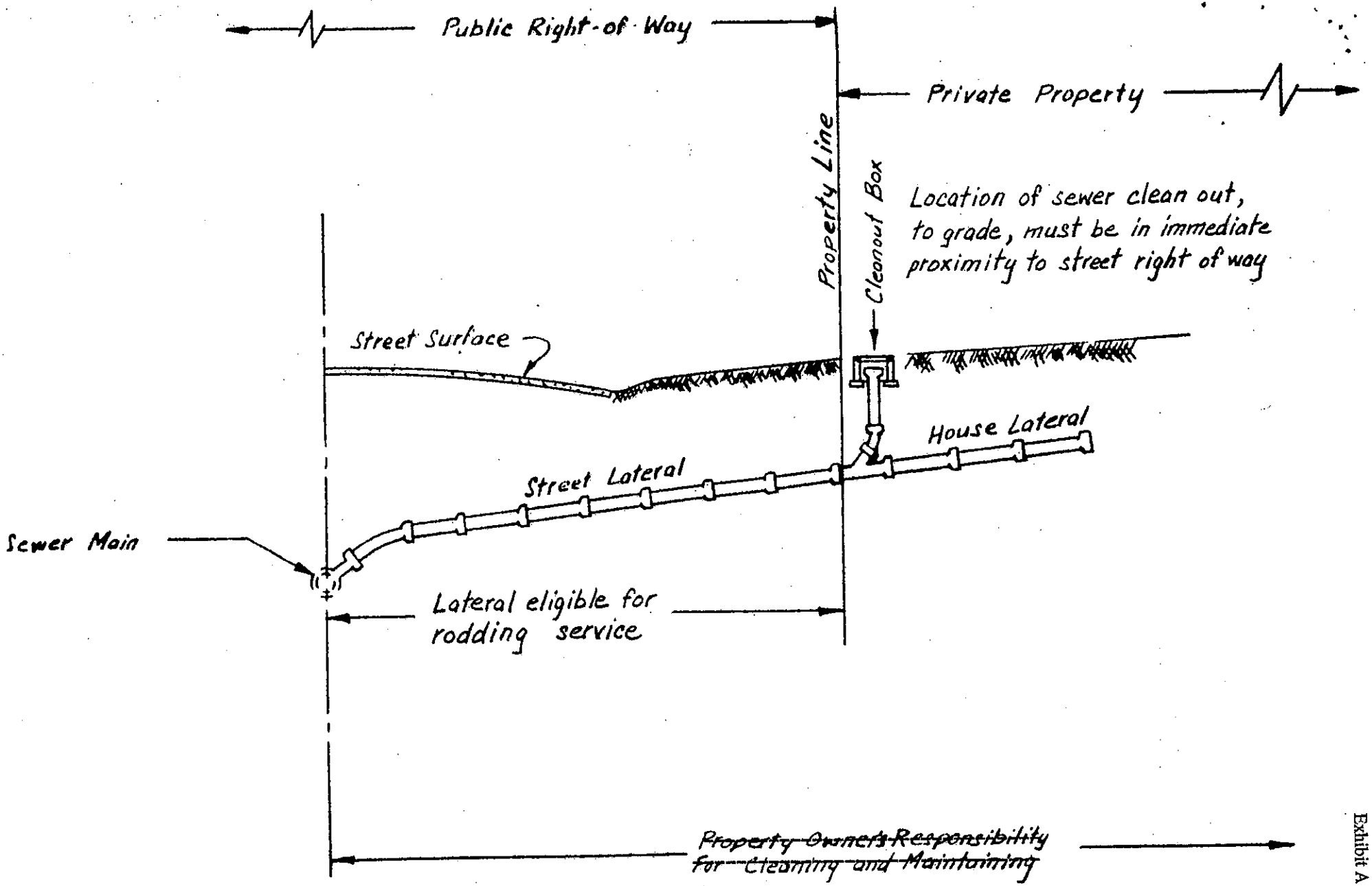

CROSS SECTION

SEWER LATERAL RODDING SERVICE

Exhibit "E"

SEWER AGREEMENT BETWEEN THE CITY OF LOS ALTOS AND THE CITY OF THE TOWN OF LOS ALTOS HILLS

FIRST AMENDMENT TO AGREEMENT

This is the first amendment to that certain agreement between the City of Los Altos (City) and the City of the Town of Los Altos Hills (Town) entitled SEWER AGREEMENT BETWEEN THE CITY OF LOS ALTOS AND THE CITY OF THE TOWN OF LOS ALTOS HILLS, entered into on March 26, 1985.

The parties agree that:

1. Section 3, Interim Limit on Connections, is amended by adding the following sentence to the end of this section:

   Furthermore, nothing in this Agreement obligates Town to provide sewer connections to those who have acquired capacity rights or to those who have not.

2. Section 5d, Ownership of Sewers, is amended in full to read:

   The sewer mains and appurtenances thereto, exclusive of laterals serving TOWN residents, that lie within O'Keefe Lane from and including the manhole from 350 feet, more or less, easterly of Dianne Drive to El Monte Avenue, shall vest in and be the property of CITY.

3. Section 10, Sewer Service Charge is amended in full to read:

   The annual sewer service charge shall reimburse CITY for its costs incurred in transporting and treating sewage emanating from TOWN and costs associated with maintaining and operating a portion of TOWN's sewer system, Pine Lane Lift Station, O'Keefe Lift Station, and certain shared sewer mains and trunk lines. For the service and use to be provided by the CITY under terms hereof, CITY shall charge an annual sewer service charge to properties within the corporate limits of TOWN in accordance with revised Exhibit "C" attached hereto and incorporated herein by reference. Upon determining the amount of the annual sewer service charge for the next fiscal year, CITY shall notify TOWN in writing no later than April 15th of each year. The CITY may include the annual sewer service charges on the County property tax billings for properties within TOWN by submitting the individual charges directly to the County Tax Collector by CITY only after TOWN has had a reasonable opportunity to review the proposed annual sewer service charge. If the Town has not approved by resolution the amount of the proposed annual sewer service charge by May 15, of any year, CITY may process charges to Tax Collector subject to a mutually agreed upon adjustment to the following year's sewer service charge.

4. Section 12, Pine Lane Lift Station is amended in full to read:

12. Pine Lane Lift Station and O'Keefe Lift Station All of the costs related to operating the Pine Lane Lift Station and O'Keefe Lift Station shall be shared between CITY and TOWN based on the number of single family residential connections and equivalent single family connections served in each jurisdiction. TOWN's proportionate share shall be included in the annual sewer service charge. In the event that TOWN is eventually able to physically divert its sewage away from the Pine Lane Lift Station, upon such diversion the TOWN's obligation to share in the costs of the lift station shall cease.

5. Section 21, Sewer Connection Permits, is amended in full to read:

Before connecting any individual dwelling or other structure in Town to any sewer facility that is or that eventually connects to a City maintained sewer, in addition to any permits required by Town, a City sewer connection permit must first be obtained for said connection from City. In order to obtain a City sewer connection permit, applicants must pay all appropriate fees established by City. In order to obtain any necessary Town permits, applicants must pay all appropriate fees established by Town.

Town shall send quarterly reports of final building inspections, including sewer hook-ups on primary and secondary dwellings, in the geographical area covered by this Agreement, to City to ascertain that all appropriate connections have obtained permits from City.

City sewer permit fees shall be collected in accordance with the Los Altos Municipal Code and this Agreement.

6. Exhibit "C", DETERMINATION OF ANNUAL SEWER SERVICE CHARGES FOR TOWN OF LOS ALTOS HILLS first paragraph is amended as shown on the revised Exhibit C attached hereto.

7. Except as amended herein, all terms and conditions of said agreement shall remain in full force and effect.

WHEREFORE the parties have entered into this amendment to agreement on the dates shown below:

"TOWN"	"CITY"
CITY OF TOWN OF LOS ALTOS HILLS, a municipal corporation.	CITY OF LOS ALTOS, a municipal corporation.
DATE April 7, 1993	DATE 6-24-93
By:	By:
City Manager	City Manager
City Clerk	City Clerk
APPROVED AS TO FORM:	APPROVED AS TO FORM:
City Attorney	City Attorney

Revised January 14, 1993

EXHIBIT "C"

DETERMINATION OF ANNUAL SEWER CHARGES FOR TOWN OF LOS ALTOS HILLS

The CITY shall prepare an estimate of costs no later than April 15th of each year for the purpose of determining the annual charge for sewer service in TOWN for the following fiscal year (July 1 - June 30). The background for the cost estimation and the proposed Resolution fixing the annual charge shall be submitted to TOWN. City shall notify TOWN if no rate adjustment is to occur. When a delay occurs in receiving information from the City of Palo Alto, CITY shall submit the information available and shall furnish the Palo Alto information when received. For purposes of the historical cost data relative to Items 3 and 4, prior service years shall cover the period of March 1 through February 28 (or February 29 in leap years), and TOWN shall be notified if any changes in these dates are proposed.

This estimate will include the following seven items:

ITEM 1 - TREATMENT PLANT EXPENSES

Annual Treatment Cost per unit =

300 gallons per day x 365 days x cost of treatment per gallon *

* Cost of treatment per gallon shall be based on estimates prepared by the City of Palo Alto and shall be on the total estimated treatment cost to Los Altos divided by the total estimated flow from Los Altos service area.

The projected cost per unit shall be adjusted by the difference between the actual and estimated cost per unit for the previous complete fiscal year (for example, in computing the cost for FY 93-94 in April of 1993, the adjustment will be based on the difference between actual and estimated costs for FY 91-92).

ITEM 2 - TRUNK SEWER MAINTENANCE COSTS

Annual Trunk Maintenance Cost per Unit =

$$\frac{300 \text{ gallons per day} \times \text{Estimated total annual trunk maintenance cost}^{*}}{\text{Total Trunk Flow per day}}$$

* Cost to be estimated by Los Altos City Engineer and identified in each year's operating budget.

ITEM 3 - COLLECTION SYSTEM MAINTENANCE COSTS

Cost of collection system maintenance in TOWN shall be based on actual services provided.

Cost of Collection System Maintenance per Unit =

$$\frac{\text{Estimated collection system maintenance cost in TOWN}^{*}}{\text{Total Number of Town Units}}$$

* Based on hours of service and at an hourly rate including labor, fringe benefits, equipment, materials, and incidental services. The hourly rate shall be determined each year by the Los Altos City Engineer and shall be identified in the City's operating budget.

The number of hours of service shall be estimated by averaging the hours of service for the previous three years. In years prior to FY 82-83, the hours of service shall be estimated and from FY 82-83 and beyond, actual time records of hours of service will be used. If in the previous service year the City incurred "outside" costs (i.e. emergency repair work by contractors sewage backup damages, etc.), the maintenance cost estimate based on hours of service shall be adjusted so as to reimburse the CITY for "outside"costs.

ITEM 4 - LIFT STATION EXPENSES

Cost of lift station expenses per unit =

$$\frac{\textbf{TOWN's cost of Pine Lane + TOWN's cost of O'Keefe}}{\textbf{total number of TOWN units in the Los Altos Basin}}$$

Item 4a - **where TOWN's** Cost of Pine Lane ~~**Lift Station per Unit**~~ =

$$\frac{\textbf{Number of TOWN units using ~~through~~ Pine Lane Lift Station}}{\textbf{Total number of ~~TOWN~~ units using Pine Lane Lift Station}} \times \frac{\textbf{Estimated annual cost of maintenance and operation* of Pine Lane Lift Station}}{\textbf{~~Total units through station~~}}$$

* Cost to include labor fringe benefits, equipment, materials, electricity, alarm system costs, an allocation for future equipment replacement, and any other services directly related to the lift station. Labor hours shall be estimated using the average of the previous three years of actual hours of service.

Item 4b - **and TOWN's** Cost of O'Keefe ~~Lift Station per Unit~~ =

Number of TOWN units using ~~through~~ O'Keefe Lift Station Total number of ~~TOWN~~ units using O'Keefe Lift Station	x	Estimated annual cost of maintenance and operation* of O'Keefe Lift Station ~~Total units through station~~

* Cost to include labor fringe benefits, equipment, materials, electricity, alarm system costs, an allocation for future equipment replacement, and any other services directly related to the lift station. Labor hours shall be estimated using the average of the previous three years of actual hours of service.

ITEM 5- INCIDENTAL COSTS

Item 5a - Engineering and Supervision

A fee of 7% of Items 1 through 4 shall be included in the annual charge for Engineering and Supervision.

Item 5b - General overhead Expenses

A fee of ~~7~~ 8% of Items 1 through 4 shall be included in the annual charge for General Overhead Expenses

ITEM 6- TOWN'S SEWER RESERVE FUND

The annual sewer service charge shall include a charge for the TOWN's Sewer Reserve Fund at the written request of TOWN. The amount shall be established by TOWN and shall be included by CITY in the annual sewer service charge. CITY may decline to include reserve funds in years in which no rate changes are proposed but in the third consecutive year with no change, CITY shall include funds for reserve if so requested. Funds are to be paid to TOWN by January 31 and May 31 in tax year collected.

SUMMARY

The total annual sewer service charge per unit for TOWN properties served by CITY shall be the sum of Items 1 through 6.

TOWN OF LOS ALTOS HILLS

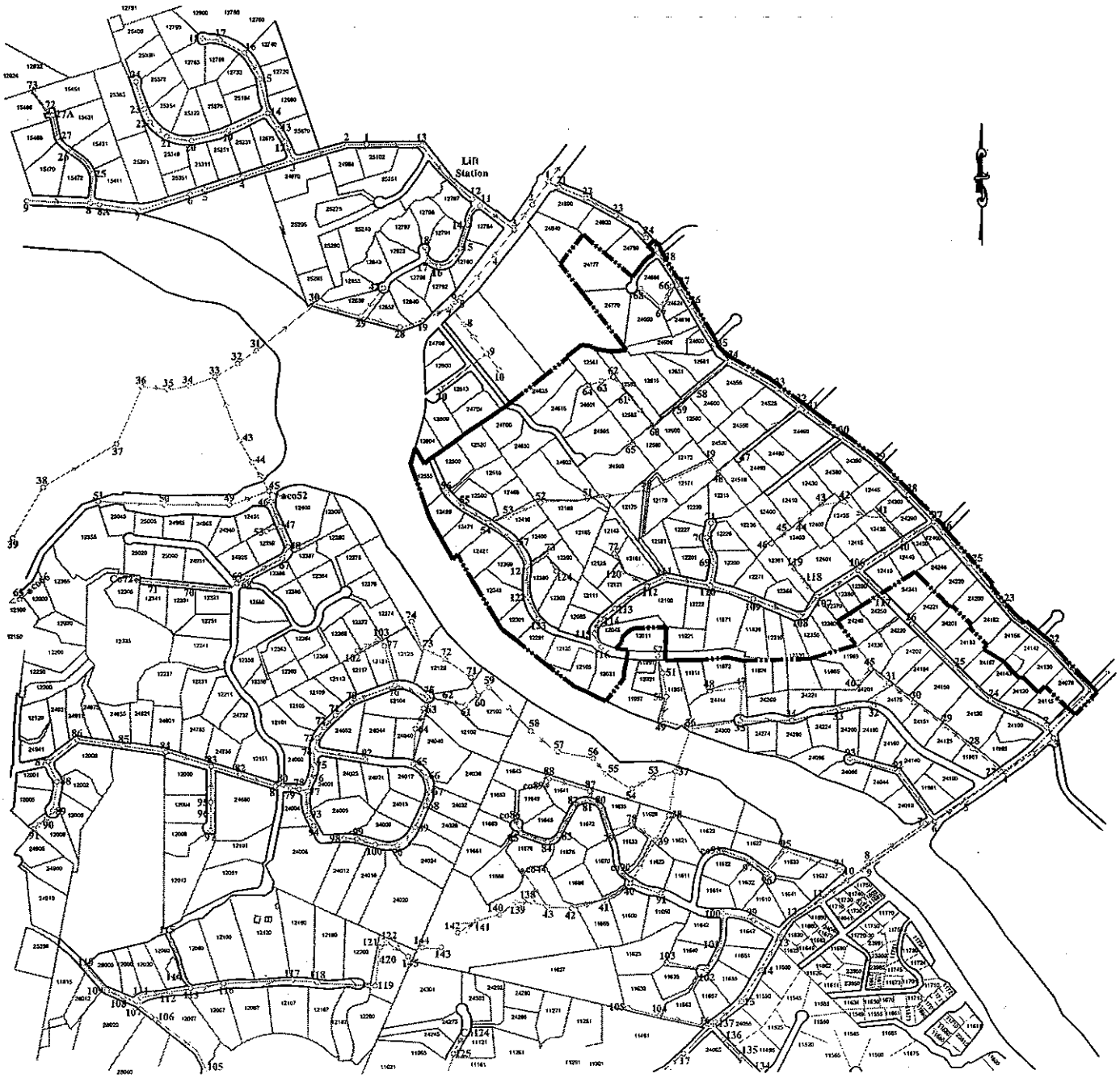

EXHIBIT "C" - TOWN AREA SERVED BY SUMMERHILL AVENUE SEWER MAIN

TOWN OF LOS ALTOS HILLS

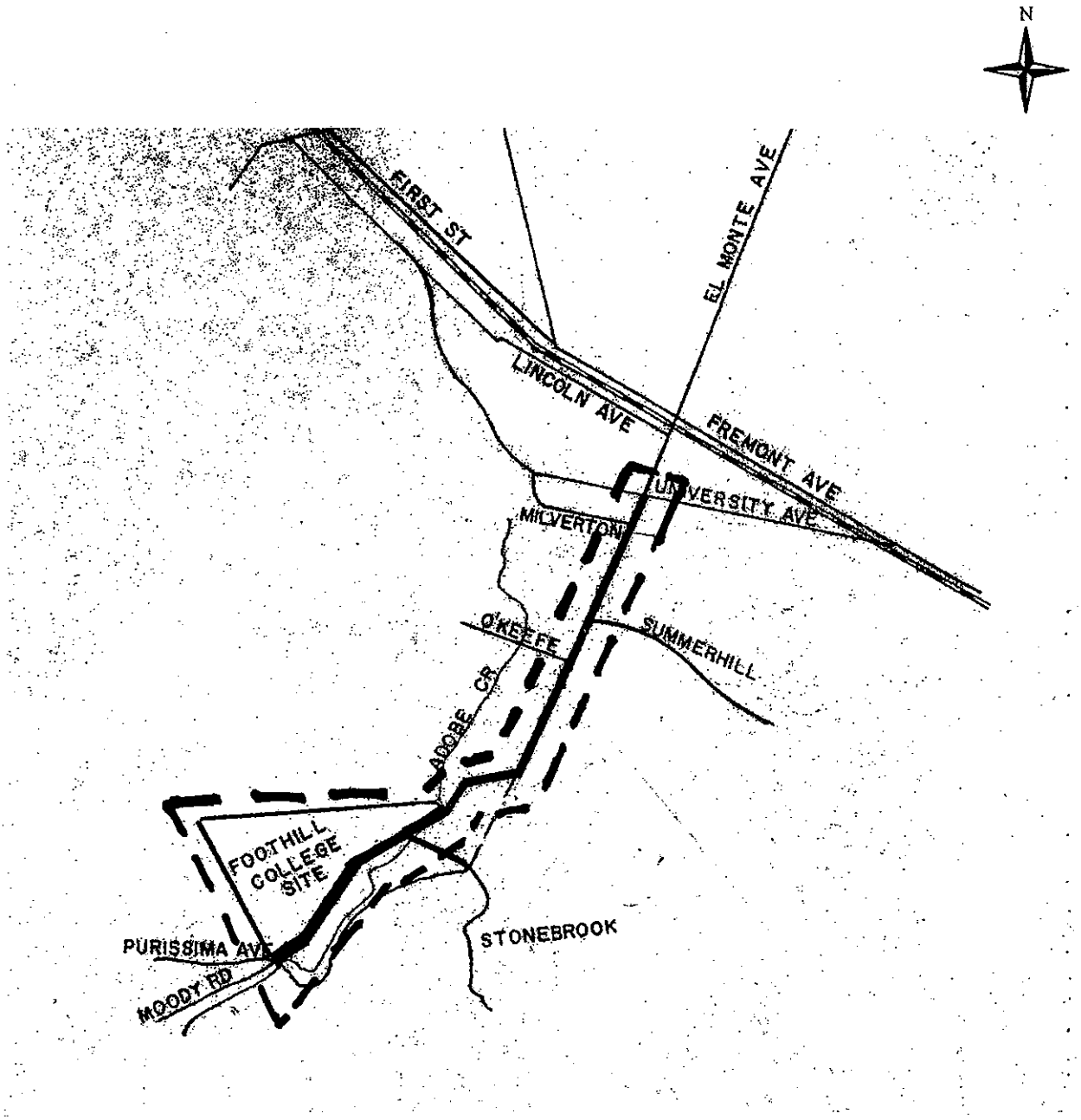

EXHIBIT "D" - TOWN AREA SERVED BY EL MONTE TRUNK SEWER

TOWN OF LOS ALTOS HILLS

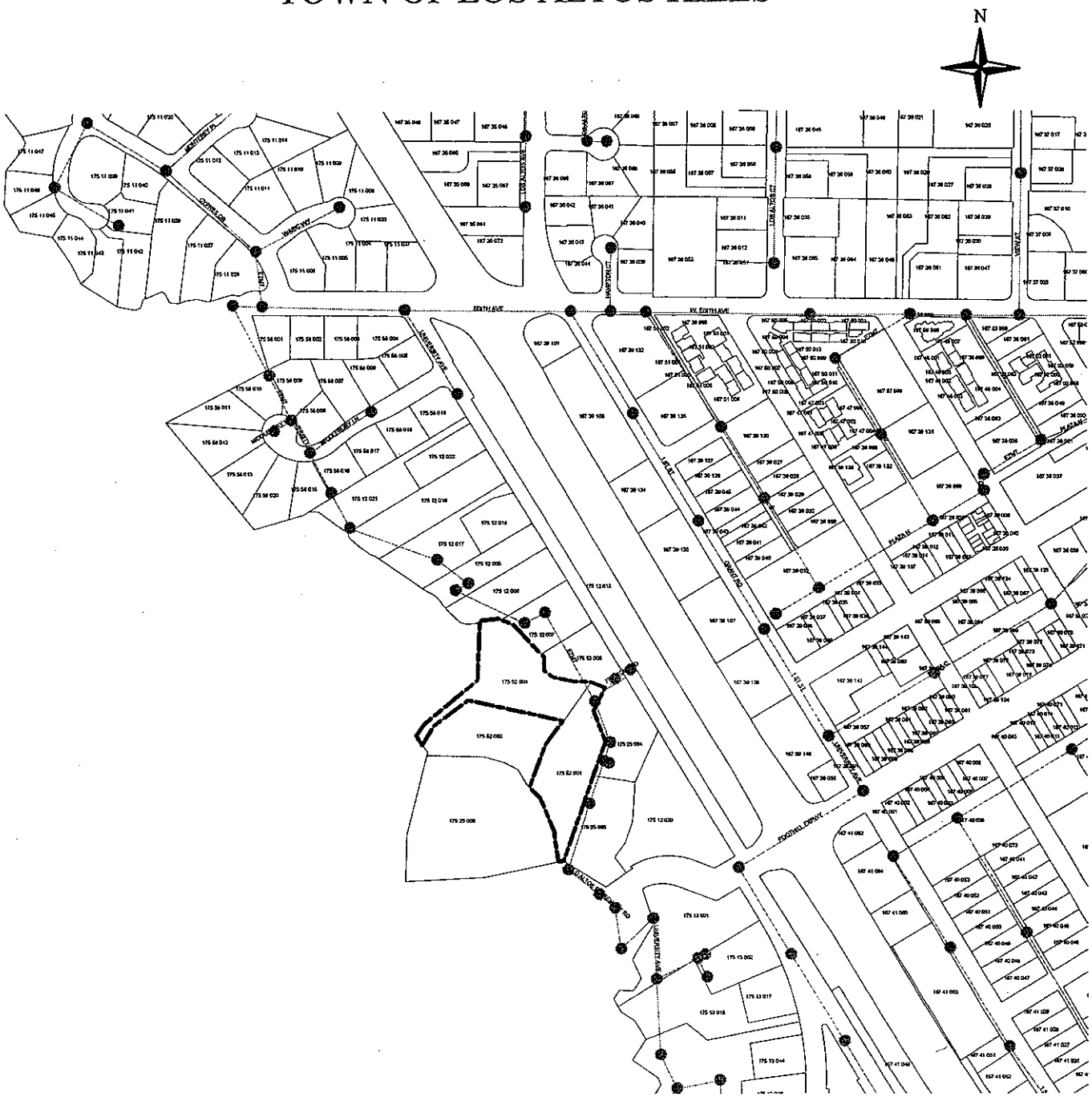

EXHIBIT "E" - TOWN AREA SERVED BY ADOBE CREEK SEWER

(SHEET 1 OF 2)

TOWN OF LOS ALTOS HILLS

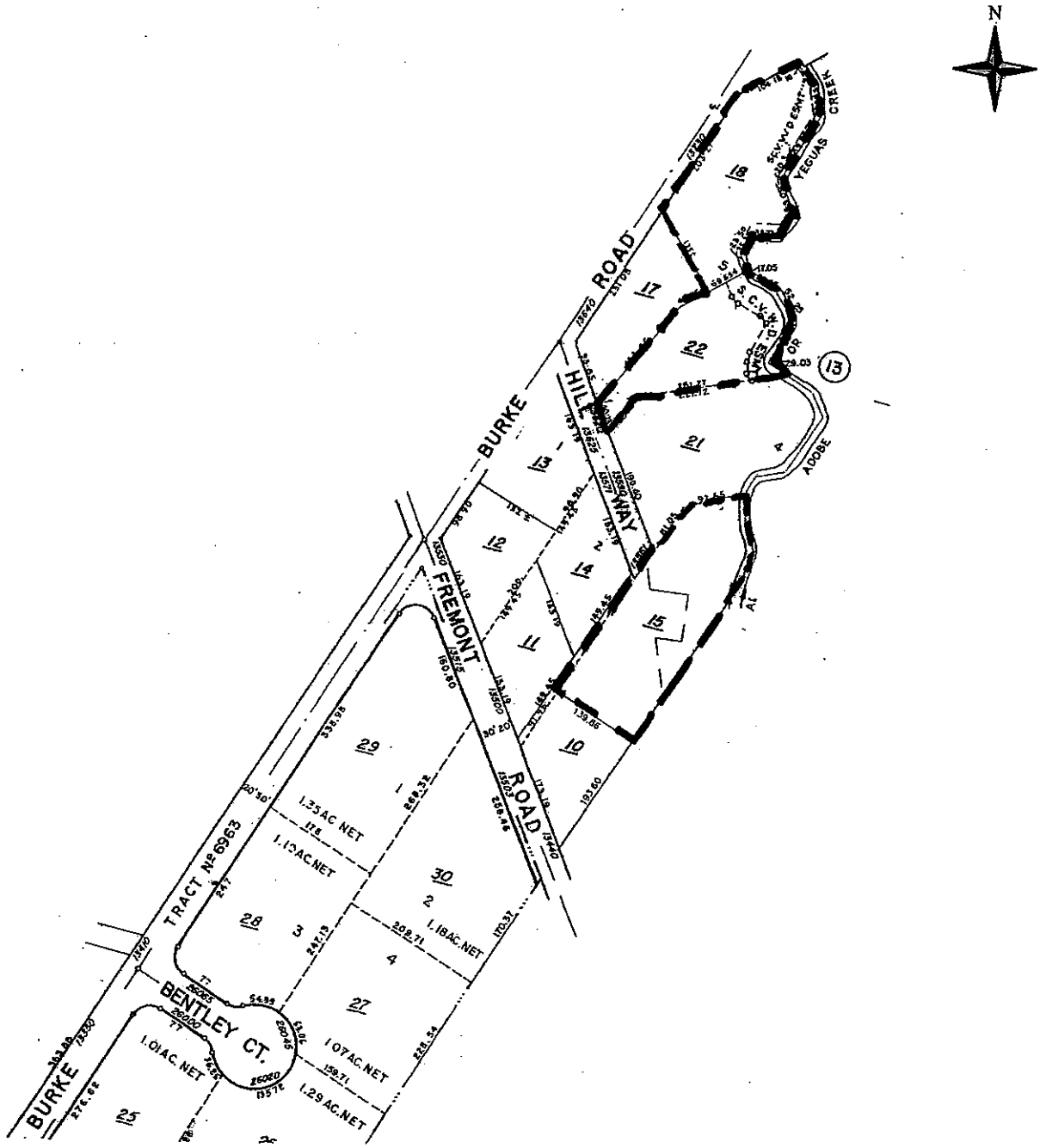

EXHIBIT "E" - TOWN AREA SERVED BY ADOBE CREEK SEWER
(SHEET 2 OF 2)

CITY OF LOS ALTOS

EXHIBIT "F" - CITY AREA SERVED BY O'KEEFE LANE SEWER

TOWN OF LOS ALTOS HILLS

Exhibit "G" - Los Altos Basin Boundaries within the Town of Los Altos Hills and its Sphere of Influence

2007-62

AMENDMENT TO AGREEMENT BETWEEN THE CITY OF LOS ALTOS, CALIFORNIA AND THE TOWN OF LOS ALTOS HILLS FOR TRANSPORTATION, TREATMENT AND DISPOSAL OF SEWAGE

This amendment ("Amendment") by and between the City of Los Altos, California ("CITY") and the Town of Los Altos Hills, California ("TOWN") is dated for references purposes as of July 1st, 2007, with reference to the following facts:

RECITALS

WHEREAS, on January 26, 2007, CITY and TOWN entered into an agreement entitled "Agreement Between the City of Los Altos, California and The Town of Los Altos Hills for Transportation, Treatment and Disposal of Sewage", ("Agreement"); and

WHEREAS, both parties desire to amend the Agreement in order to clarify the ownership of sewer mains south of Summerhill Avenue; and

NOW THEREFORE, In consideration of the covenants, conditions and promises hereinafter contained, to be kept and performed by the parties hereto, CITY and TOWN hereby agree that the following section of the aforesaid agreement dated January 26, 2007, is amended to read as follows:

1. Revision to Section 3

Paragraph (b) (i) of Section 3, **"Ownership, Maintenance, and Regulation of Collection Systems"**, shall be deleted and replaced with the following new paragraph:

"The sewer mains and appurtenances thereto, including mains serving TOWN residents and entering from the TOWN, that lie within Summerhill Avenue and that portion of Magdalena Avenue between Summerhill Avenue and Hillview Avenue shall vest in and be the property of CITY. The location and property served by these sewer mains are shown on Exhibit C.

2. General Provisions

A. This Amendment shall be binding upon and inure to the benefit of the parties hereto and their successors and assigns.

B. Except as modified hereby, the terms and provisions of the Agreement shall remain unmodified and in full force and effect.

C. Capitalized terms not otherwise defined herein shall have the same meaning as set forth in the Agreement.

D. In case of any conflict between any term or provision of this Amendment and any term or provision of the Agreement, the term or provision of this Amendment shall govern.

E. This Amendment shall be deemed to be made in, and construed in accordance with, the laws of the State of California. In the event suit is brought by either party hereunder, the Parties agree that venue for such action shall be vested in the state courts of California in the County of Santa Clara or in the United States District court in the Northern District of California.

F. This Amendment may be executed in one or more counterparts, each of which shall be deemed an original, but all of which when taken together shall constitute one agreement.

IN WITNESS WHEREOF, this Amendment has been executed as of the date set forth above.

CITY OF LOS ALTOS
A California municipal corporation

APPROVED AS TO CONTENT:

Assistant Public Works Director

APPROVED AS TO FORM
AND LEGALITY:

City Attorney

AGREED:

City Manager

TOWN OF LOS ALTOS HILLS
A California municipal corporation

APPROVED AS TO CONTENT:

Public Works Director

APPROVED AS TO FORM
AND LEGALITY:

City Attorney

AGREED:

City Manager

ORIGINAL

SECOND AMENDMENT TO AGREEMENT BETWEEN THE CITY OF LOS ALTOS AND THE TOWN OF LOS ALTOS HILLS FOR TRANSPORTATION, TREATMENT AND DISPOSAL OF SEWAGE

THIS SECOND AMENDMENT is made and entered into on this 31st day of March 2015, by and between the City of Los Altos ("CITY") and the Town of Los Altos Hills ("TOWN").

RECITALS:

WHEREAS, on January 26, 2007, CITY and TOWN entered into an agreement entitled "Agreement Between the City of Los Altos and The Town of Los Altos Hills for Transportation, Treatment and Disposal of Sewage" ("Sewage Agreement"); and

WHEREAS, on July 1, 2007, CITY and TOWN entered into an amendment to the Sewage Agreement which clarified the ownership of sewer mains south of Summerhill Avenue; and

WHEREAS, the Sewage Agreement provides that "Town flow shall be measured continuously at flow meter stations where Town sewage flow enters City's collection system"; and

WHEREAS, the Sewage Agreement provides that the City will design, construct and maintain the flow meters and the Town will fund the costs of design, construction, operation and maintenance of the flow meters; and

WHEREAS, City and Town entered into an agreement for the installation of sanitary sewer meters ("Installation Agreement") on November 3, 2008 which outlined in greater detail the terms governing the design, construction, installation and operation of the sewer meters; and

WHEREAS, pursuant to the terms of the Installation Agreement and the Sewage Agreement, the City constructed and the Town funded the installation of five sewer meters at (i) Eastbrook Avenue/Westbrook Ave (ii) Putter Way/Niblick Ave (iii) O'Keefe Lane at El Monte (iv) Summerhill Avenue at Magdalena Avenue (v) Edith Ave at City Limits; and

WHEREAS, Section III of the Installation Agreement provides that the Installation Agreement may be terminated by either party at any time upon giving the other party thirty (30) days written notice of intent to do so; and

WHEREAS, the Town paid the City $134,000 for the design, construction and installation of the sewer meters; and

WHEREAS, the meters were installed in 2009 and they have never functioned properly; and

WHEREAS, under the Town and the City's previous sewage agreement, dated March 26, 1985 and amended June 24, 1993 ("Previous Agreement"), the Town was limited to 1,100 "capacity units," which was defined as the total flow generated from each single family residential connection, which was 300 gallons per day; and

WHEREAS, the Town and the City have abandoned the sewer meters and have been calculating the flow of sewage by multiplying 300 gallons per day by the number of properties connected to sewer lines ultimately discharging into the City's sewer system; and

WHEREAS, the Town and the City have agreed to continue calculating the flow of sewage by multiplying 300 gallons per day by the number of properties connected to sewer lines ultimately discharging into the City's sewer system and desire to formalize this agreement in this Second Amendment; and

WHEREAS, the City has agreed to repair any damage to the sewer lines that may have resulted from the installation of the sewer meters; and

WHEREAS, the City has agreed to reimburse the Town for 50% of the costs of the design, construction and installation and to return all of any unused portion of the funds; and

WHEREAS, the total sum of the Town's reimbursement will be approximately $77,000 (with such number being subject to final confirmation of total project costs as determined by the TOWN's engineer and CITY's engineer); and

WHEREAS, the City and Town have agreed that the City will reimburse the Town in the form of two equal credit payments applied to Cost of Operation and Maintenance per Section 8(a) of the Sewage Agreement over a one year period.

NOW, THEREFORE, in consideration of this Second Amendment, the mutual promises, covenants, and stipulations herein contained, the parties hereto agree to terminate the Installation Agreement and to amend the Sewage Agreement as follows:

SECOND AMENDMENT

The following sections of the Sewage Agreement are hereby amended to read as follows, with additions in italics and deletions in strikethrough text:

1. **Revision to Recital Paragraph F**

The parties now desire, pursuant to the terms and conditions set forth in this Agreement, to alter their relationship to an arrangement whereby the TOWN is entitled to discharge 339,900 gallons per day, as *calculated by multiplying 300 gallons per day by the number of properties connected to sewer lines ultimately discharging* ~~measured by to-be-installed flow meters,~~ *in*to the CITY's sewer system (notwithstanding the number of capacity rights previously issued either by the TOWN or the CITY) and whereby the TOWN will allocate capacity rights and sewer connections among the residents and property owners in the Town. The TOWN's entitlement to discharge 339,900 gallons per day, as *calculated by multiplying 300 gallons per day by the number of properties connected to sewer*

lines ultimately discharging into the City's sewer system shall be reviewed by the Town and City within one year of the approval of the Second Amendment to determine whether this calculation is accurate and/or requires an adjustment.

2. **Revision to Section 1(a); Addition of Section 1(d); Addition of Section 1(e)**

Effect of Agreement; Term*; Reimbursement; Termination of Installation Agreement*

(a) The Previous Agreement had limited the amount of flow from the TOWN by limiting the number of capacity units available. This agreement instead allocates a certain amount of flow to the Town, which will *be calculated by multiplying 300 gallons per day by the number of properties connected to sewer lines ultimately discharging into the City's sewer system* ~~measured by to-be-installed flow meters, and permits the TOWN to allocate that flow among its customers in any manner it sees fit~~

(d) Under this agreement, CITY agrees to reimburse TOWN approximately [$77,000] [with such number being subject to final confirmation of total project costs as determined by the TOWN's engineer and CITY's engineer] for 50% of the costs of design, construction and installation of the sewer meters and all of any unused portion of the TOWN's funds. Further, CITY agrees to repair, at its own expense, any damage to the sewer lines caused by the removal of the sewer meters. The CITY will reimburse the TOWN in the form of two equal credit payments applied to the Cost of Operation and Maintenance per Section 8(a) of this agreement over a one year period from the date of execution of the Second Amendment to this agreement.

(e) CITY and TOWN agree to terminate the Installation Agreement and that execution of the Second Amendment constitutes sufficient notice to terminate pursuant to Section III(1) of the Installation Agreement. Section II(7) of the Installation Agreement shall survive the termination of the Installation Agreement for a period of four years.

3. **Revisions to Section 4(a), 4(d), 4(e), and 4(g)**

(a) Maximum Allowable Volumes of Discharge TOWN shall be allowed 339,900 gallons per day total flow ("the Maximum Daily Flow"), or 124.06 million gallons per year ("the Maximum Annual Flow"), as *calculated by multiplying 300 gallons per day by the number of properties in the LOS ALTOS BASIN connected to sewer lines ultimately discharging into the City's sewer system for the Maximum Daily Flow and by multiplying 300 gallons per day by the number of properties in the LOS ALTOS BASIN connected to sewer lines ultimately discharging into the City's sewer system multiplied by the number of days in a year for the Maximum Annual Flow* ~~measured by the combination of all flow meters in the LOS ALTOS BASIN~~, excepting ~~the flow meters installed by the CITY to measure~~ flow from Foothill College. This total flow amount is inclusive of base sanitary flow, groundwater infiltration, and rainfall dependent infiltration and inflow. When the sewage flow from the LOS ALTOS BASIN reaches eighty percent (80%) of the allowable maximum volume of discharge, TOWN agrees to notify CITY and to perform an engineering study (Master Plan) to address future capacity needs, which shall include implementation systems to meet the future capacity needs. TOWN and CITY shall agree upon the scope of work for the engineering study (Master Plan) prior to beginning the study.

(d) TOWN Limitation on Sewer Connection and/or Sewer Connection Permits if Maximum Allowable Flow is Exceeded ~~If~~ TOWN *shall not allow sewer connections and/ or sewer connection permits in numbers that would cause* ~~exceeds~~ (a) the Maximum Daily Flow, *or* ~~on any day during a non-wet weather period, (b) the Maximum Daily Flow plus the wet-weather flow allowance during a wet weather period, or (c)~~ *(b)* the Maximum Annual Flow *to be exceeded.*~~, TOWN will immediately suspend the issuance of sewer connections and/or sewer connection permits from the date of the Maximum Daily Flow or Maximum Annual Flow is exceeded until the flow volume is less than or equal to the maximum allowable flow.~~ *If TOWN allows sewer connections and/ or sewer connection permits in numbers that cause the Maximum Daily Flow or Maximum Annual Flow to be exceeded, then CITY may assess* Financial penalties ~~for exceeding the Maximum Daily Flow or Maximum Annual Flow will not be assessed unless sewer connections and/or sewer connection permits are allowed by TOWN during the period in which the Maximum Daily Flow or Maximum Annual Flow is exceeded~~.

(e) Financial Penalty for Exceeding Maximum Allowable Volume of Flow If TOWN allows new connections to the sewer system and/or issues sewer connection permits *in numbers that cause the* ~~during the period in which the~~ Maximum Daily Flow or Maximum Annual Flow *to be exceeded* ~~is exceeded~~, TOWN will pay a fine as outlined in the table below, and 100% of actual costs associated with exceeding capacity including, but not limited to, additional treatment costs, entire cost of upsizing mains, entire cost of fines and/or penalties from the PARWQCP, including any fines and/or penalties from any state or federal agencies, and notwithstanding paragraph 12, TOWN shall be responsible for indemnifying, defending and holding harmless CITY for claims arising from overflows caused by TOWN's excessive sewage discharge. Penalties will begin accruing from the date that the Maximum Daily Flow or Maximum Annual Flow is exceeded and will cease when the flow volume is less than or equal to the Maximum Daily Flow or Maximum Annual Flow.

Days of Exceeding Max. Allowable Flow	**Daily Financial Penalty**
0-90 days	Double the cost of sewage treatment[1] per day
90-180 days	Four times the cost of sewage treatment[1] per day
More than 180 days	Eight times the cost of sewage treatment[1] per day

Note 1. Cost of sewage treatment per day will be the total of sewage treatment costs for the preceding six months divided by 182.5 days

If the Town exceeds its maximum allowable flow volume ~~at any time during the first six months from the time that flow meter data is available from the metering stations~~, *and the Town corrects the flow violation within six (6) months from the time the violation is discovered,* then *the* City will ~~allow the Town to correct the flow violation and~~ waive any financial penalties accrued during

this period. Financial penalties will be imposed if necessary following the initial six month period *when the violation is discovered* ~~that the flow meters are in operation~~.

(g) Cost of Sewage Treatment CITY shall bill TOWN for the actual costs of treatment of TOWN flow based upon *calculated flow, i.e. multiplying 300 gallons per day by the number of properties connected to sewer lines ultimately discharging into the City's sewer system* ~~measured flow from metering stations~~ ("TOWN Costs of Treatment"). Actual costs of treatment shall include all costs that PARWQCP bills CITY including, but not limited to plant operations and maintenance, minor and major capital improvements, source control program, public outreach, permitting and enforcement, and bond debt service ("Total Costs of Treatment"). TOWN Costs of Treatment shall be determined by the following formula based on the billing period:

TOWN Cost of Treatment = (TOWN flow/Total flow *of* CITY and TOWN at master meter) multiplied by (Total Cost of Treatment based on PARWCQP billings)

4. **Revision to Section 6**

~~Measurement~~ *Calculation* of Volume of Town Flow. TOWN Flow shall be *calculated by multiplying 300 gallons per day by the number of properties connected to sewer lines ultimately discharging into the CITY's sewer system.* ~~measured continuously at flow meter stations where TOWN sewage flow enters CITY's collection system~~

~~(a) CITY will design, construct, operate and maintain flow metering stations at the following locations:~~

~~(i) Eastbrook Avenue/Westbrook Avenue~~

~~(ii) Putter Way/Niblick Avenue at I-280,~~

~~(iii) O'Keefe Lane at El Monte Road,~~

~~(iv) Summerhill Avenue at Magdalena Avenue,~~

~~(v) Edith Avenue at City Limits,~~

~~(vi) West of Pine Lane Lift Station near Foothill Expressway. This flow meter will be eliminated if Town transfers flow anticipated at this location to the City of Palo Alto collection system.~~

~~CITY will provide TOWN with data from the meters and, upon request, provide TOWN with the ability to verify calibration of meters.~~

~~(b) TOWN will fund costs of design, construction, operation, and maintenance of the flow metering stations. Within 30 days of execution of this agreement, TOWN shall deposit with CITY an amount not less than $50,000 for design of the flow metering stations. Any used portion of this amount will be used to fund the construction, inspection, and contract administration of the flow meter installations. If the is a shortfall of funds for design, CITY will notify TOWN of shortfall. TOWN will remit shortfall to CITY within 30 days of notification.~~

~~Within 30 days of construction contract bid opening, TOWN shall deposit with CITY an amount equal to 100% of the lowest responsible bidder amount plus an additional 20% of the bid amount to fund construction contingencies (in an amount estimated at 10% of bid amount) and construction inspection and administration (in an amount estimated at 10% of bid amount). Any used TOWN funds will be returned to Town following acceptance of the project and release of retention. Town will remit any funding shortfall for total project costs to CITY within 30 days of notice and invoice. TOWN shall be permitted to inspect CITY project accounting documents at TOWN's request.~~

~~(c) For each day TOWN fails to meet the schedule or milestones set forth in Section 6. b above and Section 7.a.i below, TOWN shall be subject to the daily penalties set forth below:~~

~~Schedule Lapse~~	~~Daily Financial Penalty~~
~~0-90 days~~	~~Two times the daily TOWN Cost of Treatment per day~~
~~90-180 days~~	~~Four times the daily TOWN Cost of Treatment per day~~
~~More than 180 days~~	~~Eight times the daily TOWN Cost of Treatment per day~~

5. **Revision to Section 7(b)**

(b) Maximum TOWN Flow in Joint Use Mains If the capacity of a joint use sewer main is exceeded as a result the flow contribution from TOWN, TOWN will be responsible for 100% of costs of increasing the size of the joint use main to accommodate the current and future projected flow from TOWN. TOWN flow will be determined *by calculating the flow by multiplying 300 gallons per day by the number of upstream properties connected to sewer lines ultimately discharging into the City's system* ~~measuring actual flow as determined by the nearest upstream meter(s)~~. Maximum allowable TOWN flow will be determined by calculating the maximum flow capacity of the main and subtracting the calculated maximum future CITY flow, including peaking factor based on General Plan projects for CITY "build out" (as of the Effective Date) at and upstream of the problem area. TOWN shall hold CITY harmless for all claims and local, state, and federal regulatory penalties arising from any sanitary sewer overflow resulting from TOWN's flow exceeding the capacity of the joint use main.

6. **Revision to Section 8(a); 8(d)(i); 8(d)(iii)**

(a) Cost of Operation and Maintenance of CITY-Owned Facilities When all ~~flow meter stations and~~ parallel mains, required to be installed by ~~Sections 6.a and~~ 7.a, become operational, operation and maintenance costs for the collection system within CITY that carries sewage from CITY and TOWN ~~(including flow meter stations)~~ shall be invoiced on a *biannual*

~~quarterly~~ basis for remittance by TOWN. The amount invoiced shall be equal to fifty percent (50%) of TOWN Costs of Treatment (as determined pursuant to Section 4 ~~e~~ *g* above) during the billing period. CITY shall have the right to renegotiate or terminate the agreement if CITY's operating costs exceed 50% of TOWN Costs of Treatment. Prior to all ~~flow meter stations and~~ parallel mains, required to be installed by ~~Sections 6.a and~~ 7.a, become operational, CITY shall bill TOWN for operation and maintenance of CITY-owned facilities pursuant to the Previous Agreement.

(d) Capital Improvements Capital Improvements are defined as repair or construction work on sewer mains, manholes, or lift stations that are equal to or greater than $10,000 in cost.

(i) CITY shall be responsible for design and construction for all capital improvements for Joint-Use Mains within CITY's sewer system. TOWN's cost share for improvements will be based on the proportion of ~~metered~~ *calculated* flow of TOWN contribution as determined by *multiplying 300 gallons per day by the number of* the nearest upstream ~~meter(s)~~ *properties* of TOWN contributing *flow* to the sewer main and the total flow at the downstream location of the improvement. CITY will be responsible for ~~measuring~~ *calculating* flow ~~and determining the duration that the meter will be in place for such measurement~~. TOWN has the right to participate in the ~~physical~~ flow *calculation* ~~measurement~~ and will be provided data from the flow *calculation* ~~measurement.~~ TOWN's cost share will include direct costs for design, construction, inspection, and construction administration as well as CITY standard overhead charges.

(iii) TOWN's share of costs for all capital improvements related to the PARWQCP will be paid for as part of the TOWN Costs of Treatment as determined in Section 4 g above.

General Provisions of the Second Amendment

The following general provisions shall govern this Second Amendment to the Sewage Agreement:

A. This Amendment shall be binding upon and inure to the benefit of the parties hereto and their successors and assigns.

B. Except as modified hereby, the terms and provisions of the Sewage Agreement shall remain unmodified and in full force and effect.

C. Capitalized terms not otherwise defined herein shall have the same meaning as set forth in the Sewage Agreement.

D. In case of any conflict between any term or provision of this Amendment and any term of provision of the Sewage Agreement, the term or provision of this Amendment shall govern.

E. This Amendment shall be deemed to be made in, and construed in accordance with, the laws of the State of California. In the event suit is brought by either party hereunder, the Parties agree

that venue for such action shall be vested in the state courts of California in the County of Santa Clara or in the United States District court in the Northern District of California.

This Amendment may be executed in one or more counterparts, each of which shall be deemed an original, but all of which when taken together shall constitute one agreement.

[SIGNATURE PAGE FOLLOWS]

IN WITNESS WHEREOF, this Amendment has been executed as of the date set forth above.

CITY OF LOS ALTOS
A California municipal corporation

APPROVED AS TO CONTENT:

Public Works Director

APPROVED AS TO FORM
AND LEGALITY:

City Attorney

AGREED:

City Manager

TOWN OF LOS ALTOS HILLS
A California municipal corporation

APPROVED AS TO CONTENT:

Public Works Director

APPROVED AS TO FORM
AND LEGALITY:

See attached signature page

City Attorney

AGREED:

City Manager

IN WITNESS WHEREOF, this Amendment has been executed as of the date set forth above.

CITY OF LOS ALTOS
A California municipal corporation

APPROVED AS TO CONTENT:

_____
Public Works Director

APPROVED AS TO FORM
AND LEGALITY:

_____
City Attorney

AGREED:

_____
City Manager

TOWN OF LOS ALTOS HILLS
A California municipal corporation

APPROVED AS TO CONTENT:

_____
Public Works Director

APPROVED AS TO FORM
AND LEGALITY:

Lindsay T. D'Andrea

_____
City Attorney

AGREED:

_____
City Manager

City of Palo Alto Discharge Agreement

ORIGINAL

Agreement Account No. 2876

A G R E E M E N T

SEWAGE TRANSPORTATION, TREATMENT AND DISPOSAL

LOS ALTOS HILLS

THIS AGREEMENT, made and entered into this 18th day of March, 1968, by and between the CITY OF PALO ALTO, a municipal corporation, hereinafter called "Palo Alto", and the TOWN OF LOS ALTOS HILLS, a municipal corporation, hereinafter called "Los Altos Hills";

W I T N E S S E T H:

WHEREAS, Palo Alto has constructed and is maintaining and operating a sanitary sewerage collection, treatment and disposal works and system; and

WHEREAS, Los Altos Hills desires to provide for the collection of sewage emanating from within a portion of its territorial limits and to acquire the right to use Palo Alto's sanitary sewerage works and system for the purposes of transporting, treating and disposing of said sewage; and

WHEREAS, Palo Alto and Los Altos Hills are authorized, pursuant to the provisions of the Joint Exercise of Powers Act, Chapter 5, Division 7, Title 1, of the Government Code of the State of California, and do desire to enter into a joint use agreement concerning the transportation, treatment and disposal of sewage.

NOW, THEREFORE, in consideration of their mutual covenants the parties hereto agree as follows:

1. RIGHT OF USE. Subject to all of the conditions, limitations, restrictions, terms and provisions contained in this agreement, and Los Altos Hills' faithful compliance with and performance of the same, Palo Alto hereby grants to Los Altos Hills the right to connect to Palo Alto's trunk sewer lines at the points indicated on EXHIBIT A hereto, and the right to discharge therein domestic sewage emanating from, and only from, that area within the territorial limits of Los Altos Hills shown on the map marked EXHIBIT B

hereto. No other connections to Palo Alto trunk sewer lines shall be permitted except by amendment of this agreement in writing, provided that Palo Alto may permit direct connections thereto of individual services under supervision by Palo Alto and with prior written approval of the City Manager of Palo Alto.

2. GALLONAGE RESTRICTIONS. Los Altos Hills shall not cause or allow to be discharged into any of Palo Alto's trunk sewer lines any sewage in excess of an average dry weather sewage flow of 830,000 gallons per day nor in excess of a peak wet weather sewage flow of 3,410,000 gallons per day. Los Altos Hills shall be responsible for controlling the land use of the territory subject to this agreement so as not to allow the generation of sewage flows to exceed said limits. In the event that the above stated sewage flows are exceeded, Palo Alto shall have the absolute right to physically prohibit the amount of excess sewage flow.

3. OWNERSHIP AND MAINTENANCE OF FACILITIES IN LOS ALTOS HILLS. All existing and future sanitary sewer facilities and systems located within the area delineated in EXHIBIT B hereto attached, except those owned, operated and maintained by Palo Alto as of the date of this agreement, shall be owned by Los Altos Hills and shall be operated, maintained and subject to the control of Los Altos Hills except as herein otherwise provided or unless there is a separate written agreement providing for the maintenance and operation thereof by Palo Alto.

4. CONTROLS AND RIGHTS AS TO USE. The following regulations and controls shall apply so as to insure proper use of the sanitary sewers and sewerage facilities affected by this agreement:

(a) Right of Inspection. Palo Alto may inspect and quire into the manner in which Los Altos Hills is maintaining and operating its sanitary sewer system to the end that it shall be maintained and operated in good working order and repair. Each party may examine into the accounts and accounting system of the other.

(b) Waters Prohibited. Waters emanating from leaders from roofs, surface drains or storm drains, surface or storm waters, cooling waters or unpolluted industrial waste waters, shall not be permitted to be introduced into Los Altos Hills' sanitary sewer system.

(c) Types of Wastes Prohibited. Except as hereinafter provided, Los Altos Hills shall not discharge or cause or permit to be discharged into any of Palo Alto's trunk sewers any waters or wastes in such a manner or of such character as to be violative of Palo Alto's Industrial Waste Ordinance as now established or as may hereafter be amended, and to this end Los Altos Hills agrees to enact an ordinance of its own which will contain the same conditions and restrictions as they now exist or may hereafter be changed or amended.

(d) Control Manholes. When required by Palo Alto, Los Altos Hills shall install suitable control manholes at points of connection to Palo Alto's trunk sewers to facilitate the observation, sampling and measuring of wastes. Such manholes shall be located and constructed in accordance with plans approved by Palo Alto. Such manholes shall be installed by Los Altos Hills at its sole cost and expense and, after acceptance, shall become the property of and shall be maintained by Palo Alto. All measurements, tests and analyses of the characteristics and quantity of waters and wastes shall be determined in accordance with standard sanitary engineering methods.

(e) Authorized Agent. Unless otherwise provided, the City Manager of each of the parties, or his delegate, shall be the agent authorized to act for his city hereunder.

5. PAYMENTS FROM LOS ALTOS HILLS TO PALO ALTO. For the service and use to be provided by Palo Alto under the terms hereof, Los Altos Hills agrees to pay to Palo Alto the following charges:

(a) Initial Capital Contribution. Los Altos Hills shall pay to Palo Alto the sum of $399,545.00 as an initial capital contribution. Said sum is a portion of Palo Alto's present capital investment in treatment and disposal facilities and trunk sewer facilities as set forth in "Report on Charges for Sewer Service to Los Altos Hills" dated April 6, 1967, attached hereto as EXHIBIT C and incorporated herein. Said initial capital contribution shall be paid as follows:

Upon connection or January 1, 1969, whichever date occurs first	$25,000
July 1, 1969	$55,000
July 1, 1970	$80,000
July 1, 1971	$80,000
July 1, 1972	$80,000
July 1, 1973	$79,544.

(b) Cost of Transportation, Treatment and Disposal. Los Altos Hills shall pay to Palo Alto for transporting, treating and disposing of sewage emanating from the Los Altos Hills area subject to this agreement, an annual amount based on volume of sewage so transported, treated and disposed. The amount to be charged will be calculated according to the formula set forth in EXHIBIT C for each fiscal year from the cost records of the City of Palo Alto and shall include a surcharge of fifty percent (50%). Los Altos Hills agrees to submit to the Utilities Department of Palo Alto duplicate original building permits or plumbing permits for each connection into the Los Altos Hills sewer system covered by this agreement for the purpose of estimating the annual volume of sewage. It is mutually agreed that for each single-family residential connection, 400 gallons per day per connection will be used in determining the volume of sewage from a single-family residence. For all connections other than single-family, the annual volume of sewage will be mutually agreed upon.

6. FUTURE CAPITAL IMPROVEMENTS.

(a) Improvements Involving No Additional Capacity. Los Altos Hills shall share in the actual costs of such capital improvements to Palo Alto's treatment and disposal plant and facilities and to Palo Alto's trunk sewers affected by this agreement as Palo Alto in its sole discretion may deem necessary from time to time.

(b) Share Payable by Los Altos Hills. Los Altos Hills' share of the costs of capital improvements under 6(a) hereof shall be calculated on the same basis as set forth in section 5(a) for calculating Los Altos Hills' initial capital contribution.

(c) Payment by Los Altos Hills. Sums payable by Los Altos Hills pursuant to this section shall be paid in cash upon completion of the improvement, unless at the time of making any such improvement the parties mutually agree to payment of the Los Altos Hills' share of the costs thereof on an installment basis.

(d) Funding From Outside Sources. Each party agrees to cooperate with the other in applications for grants or funds from outside sources to cover expansion, repair or maintenance of facilities covered by this agreement. The allocation between the parties hereto of any funds so acquired, including the payment therewith of any monetary obligation imposed by this agreement, shall be based as nearly as may be practicable on the legislative intent supporting the grant or fund and in relation to the concepts and purposes upon which the obligations of this agreement are based.

7. GENERAL PROVISIONS.

(a) Term of Agreement. This agreement may be terminated by either party only by five (5) years' written notice to the other party, or upon default in payment, as specified below. Neither party hereto shall be required to pay to the other, in

any year, any sum exceeding the income and revenue of the paying party provided for such year, but if at any time Los Altos Hills fails to make any payment required by 5(a) hereof when due, this agreement shall be of no further force and effect. If the termination occurs because of the giving of notice by Los Altos Hills and the termination date falls within the first ten (10) years of this agreement, Los Altos Hills shall be entitled to reimbursement for its initial capital contribution to Palo Alto's facilities as herein provided, such reimbursement to be allocated in proportion to the number of years of use in relation to ten (10) years.

(b) Limited Rights. Except as expressly provided herein, nothing contained in this agreement shall be deemed to give Palo Alto or Los Altos Hills any ownership rights or any other right, title or interest in or to the other party's sanitary sewerage system, or any part thereof, excepting the contractual rights set forth in this agreement.

(c) Successors. This agreement shall inure to the benefit of, and be binding upon, the successors or assigns of any party, but Los Altos Hills shall not assign its rights hereunder to any party other than a duly formed public entity organized and existing under the laws of the State of California.

8. BREACH AND REMEDIES.

(a) Breach of Covenants. In case of a breach or alleged breach on the part of either party in the performance of any of its obligations hereunder, not less than thirty (30) days' notice of said breach shall be given to it in writing by the other party, delivered to the office of the Clerk thereof, or mailed to said office registered mail, postage prepaid, and said party shall have thirty (30) days from the date of said delivery or registration of said mail to cure said breach.

(b) Delinquent Payments. In the event that either party shall fail to make any payment or reimbursement herein provided within thirty (30) days from the due date thereof, interest at the rate of five percent (5%) per annum shall accrue thereon from the due date until paid.

(c) Legal Action. In the event either party shall fail to cure a breach within said thirty (30) days as provided in Section 8(a) hereof, or in the event Los Altos Hills shall fail to pay Palo Alto any amount provided herein within six (6) months from the due date thereof, the injured party, at its election, may file and prosecute to judgment a suit to recover, or in mandate, or in mandatory or prohibitory injunction, or other legal or equitable remedy.

(d) Arbitration. In case any dispute should arise between the parties hereto regarding the construction, meaning or effect of this agreement or any of its provisions, or the rights, privileges, duties or obligations of the parties hereto or either of them, then upon written notice of an intention to arbitrate, given by one party to the other, such dispute shall be arbitrated and decided by arbitrators pursuant to the provisions of section 1281, et seq., of the California Code of Civil Procedure, unless an action or suit is filed by the other party within fifteen (15) days after said notice is given.

(1) Arbitrators' Qualifications. The persons appointed shall be trained and qualified in the matter to be passed upon. If the matters principally involve engineering, the arbitrators shall be registered civil engineers. If they involve accounting, the persons appointed shall be certified or licensed public accountants. If the matters involve law, they shall be passed upon by duly licensed attorneys. Where problems in controversy are complex in nature, to the extent

practicable, they shall be divided and the separate matters assigned to persons qualified.

(2) Appointment - Vacancies. The arbitrators appointed shall be notified in writing as well as the parties hereto, by the appointing party. If an arbitrator shall refuse to act or shall resign, another shall be appointed in his place by the party making the original appointment. If there is a failure or refusal to appoint an arbitrator for thirty (30) days after written demand, a party or arbitrator may apply to the Superior Court for Santa Clara County and said Court shall designate and appoint such arbitrator or arbitrators.

(3) Hearings. All arbitrators appointed shall sit at any hearing.

(e) Nature of Remedies. As to the remedies of either party aggrieved hereunder:

(1) Cumulative. No remedy conferred hereby or by the law is intended to be exclusive of any other remedy, but each such remedy is cumulative and in addition to every other remedy and may be exercised without exhausting and without regard to any other remedy conferred hereby or by the law.

(2) Waiver. No waiver of any default or breach of duty or contract shall extend to or shall affect any subsequent default or breach of duty or contract or shall impair any rights or remedies herein.

(3) Delays. No delay or omission to exercise any right or power accruing upon any default shall impair any such right or power or shall be construed to be a waiver of any such default.

IN WITNESS WHEREOF, the parties hereto have caused these resents to be executed by their respective officers thereunto duly authorized the day and year first above written.

ATTEST:

City Clerk

CITY OF PALO ALTO

BY

Mayor

APPROVED AS TO FORM:

City Attorney of Palo Alto

APPROVED:

City Manager

APPROVED:

Chief Utilities Engineer

APPROVED:

City Controller

ATTEST:

Town Clerk

CITY OF LOS ALTOS HILLS

BY

Mayor

APPROVED AS TO FORM:

City Attorney of the
Town of Los Altos Hills

EXHIBIT B

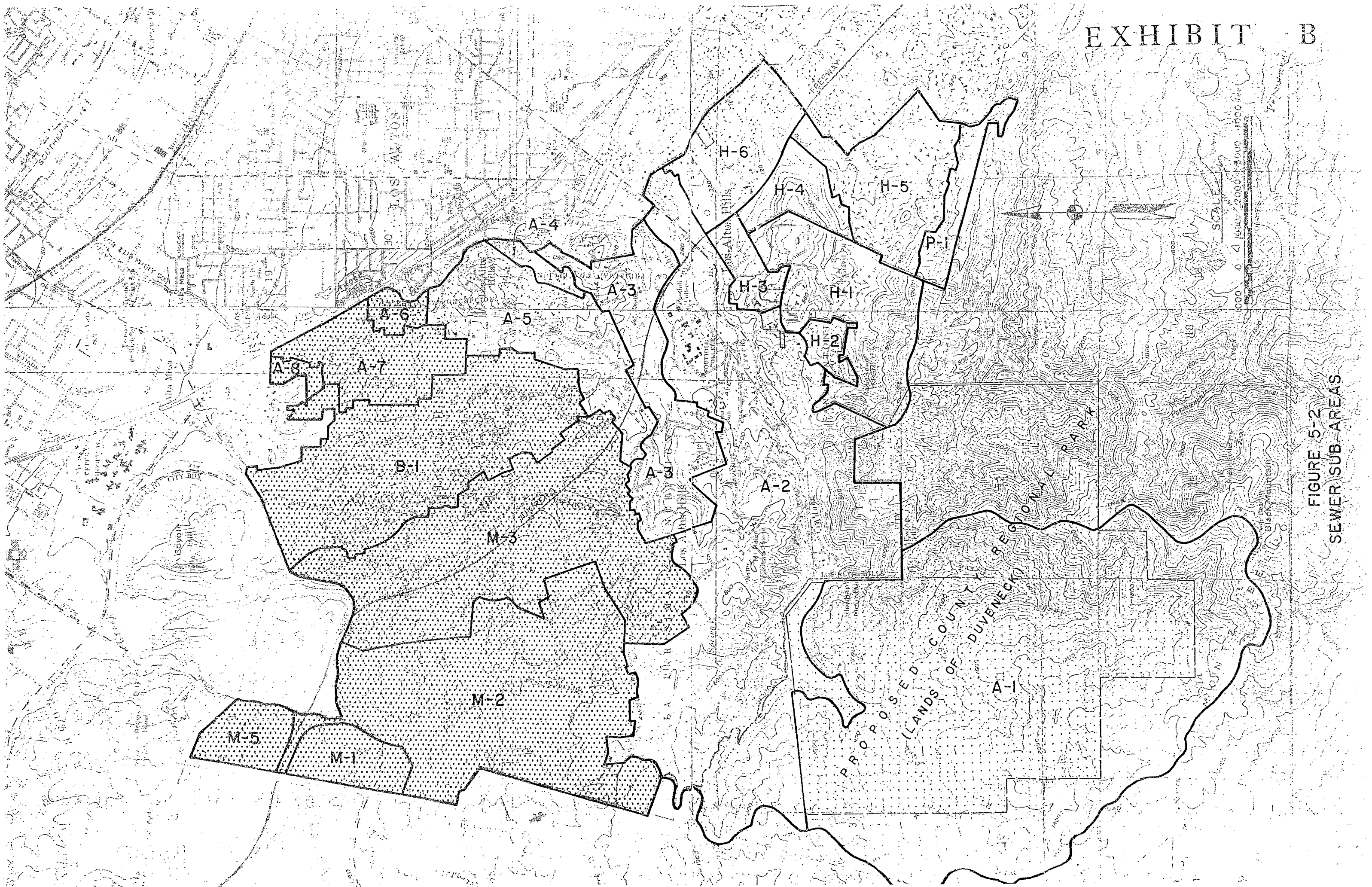

FIGURE 5-2
SEWER SUB-AREAS

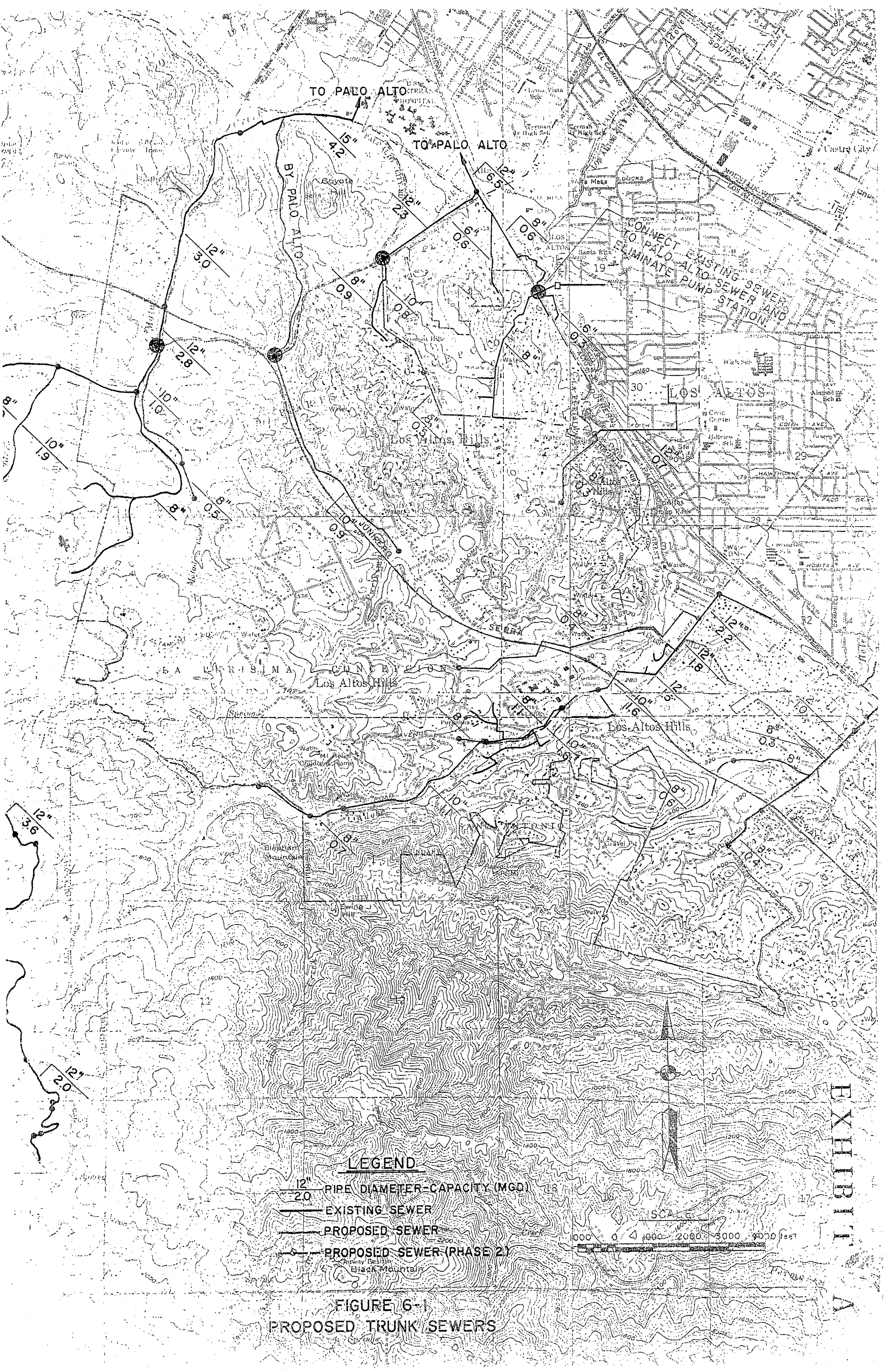

FIGURE 6-1
PROPOSED TRUNK SEWERS

EXHIBIT A

EXHIBIT C

REPORT ON

CHARGES FOR SEWER SERVICE TO LOS ALTOS HILLS

April 6, 1967

INTRODUCTION

This report is a discussion of what capital facilities should be included in the charges, the basis to establish the charges, the development of charges for existing and future capital expenditures, and the development of charges for volume of sewage treated.

CAPITAL FACILITIES INCLUDED IN THE CHARGE

Los Altos Hills should pay for a share of the existing treatment plant, major and minor trunk sewer systems, share in the future capital cost of the treatment plant and trunk sewer systems, and share in the cost of operation and maintenance of the sewage treatment plant and trunk sewer system.

BASIS FOR THE ESTABLISHMENT OF THE AMOUNT OF THE CHARGE

The amount to charge for the treatment plant would be in the ratio of the ultimate dry weather flow of Los Altos Hills to the total Palo Alto plant flow. The Charles S. McCandless and Company's August, 1966, report for the Town of Los Altos Hills indicates the average dry weather flow would be 0.83 MGD; this is from Table 5-1, Page 33.

From the Jenks and Adamson Report for the City of Palo Alto, 1966, Table 3-4, Page 3-6, the average dry weather flow for the total Palo Alto plant is 22.65 MGD.

$$\text{Ratio} = 0.83 \div 22.65 = 3.66\%$$

On this assumption, Los Altos Hills would pay 3.66 percent of all existing and future capital costs of the sewage treatment plant.

Participation in the capital cost for the major trunk sewer system would be based on the ratio of ultimate estimated peak flow rate of Los Altos Hills to the estimated ultimate peak flow rate for the Palo Alto system. Again, from the McCandless Report, Table 5-1, Page 33, the peak flow for Los Altos Hills is 3.41 MGD. From the 1965 Brown and Caldwell Report, Table 4-3, Page 56, the total peak flow was made up of 41.32 MGD from Palo Alto, 9.40 MGD from Stanford University, and 3.41 MGD from Los Altos Hills, for a total of 54.13.

$$\text{Ratio} = 3.41 \div 54.13 = 6.3\%$$

On this basis, Los Altos Hills would pay 6.3 percent of all existing and future capital costs of major trunk sewer systems.

Los Altos Hills' participation in the two minor trunk systems, the Palo Alto Unified School District's extension and foothills extension, would be based on a ratio of area to be served: Palo Alto, 1,237; Los Altos Hills, 2,636.

$$\text{Ratio} = 2{,}636 \div 3{,}873 = 68.06\%$$

On this basis, Los Altos Hills would be charged 68.06% of the cost of the minor trunk sewer system.

The charge for transportation, treatment, and disposal of sewage would be based on volume treated. To determine the volume, there would be a mutual agreement as to the volume of sewage per connection and a report of the number of active connections.

DEVELOPMENT OF CHARGES

Charge for Sewage Transportation, Treatment, and Disposal

The 1964-65 recorded operation and maintenance cost, exclusive of capital cost and depreciation, was $130,774 for treatment and disposal and $6,145 for trunk sewer system. The total plant flow for the year was 3,350 million gallons. The average cost for treatment per million gallons was $39.00. In developing the operating and maintenance cost per million gallons for the trunk sewer system, we must exclude 390 million gallons flow from the East Palo Alto Sanitary District. The District owns, operates, and maintains its own trunk sewer system. The total flow through the Palo Alto trunk system was 2,960 million gallons, for an average cost of $2.00 per million gallons. The total cost for transportation and treatment was $41.00 per million gallons.

Assuming 400 gallons per day per dwelling unit, the annual cost per dwelling unit equals:

$$400 \times 365 \times 41 \div 1{,}000{,}000 = \$6.00 \text{ per year.}$$

Capital Charges

The attached table shows all elements of existing, current, and future capital costs; costs used are from official City of Palo Alto records and recent consultant studies. It shows allocations to Los Altos Hills based on percentages developed. A twenty-five percent surcharge has been added to the capital costs. Also, we have calculated the cost to Los Altos Hills per gross acre.

CHARGES FOR SEWER SERVICE TO LOS ALTOS HILLS

CAPITAL CHARGES

Description	Cost	Allocation of Cost to Los Altos Hills (2,636 Gross Acres) %	Amount	Surcharge (25%)	Total	Cost per Gross Acre
Existing Capital Investment						
1. Treatment Plant	$1,058,861	3.66	$ 38,754	$ 9,688	$ 48,442	$ 18.38
2. Major Trunk System	991,521	6.30	62,466	15,617	78,083	29.62
3. Minor Trunk System:						
Palo Alto School District	76,283	68.06	51,918	12,980	64,898	24.62
Foothills, 59-1	131,066	68.06	89,204	22,301	111,505	42.30
Total Existing Capital Investment	$2,257,731		$242,342	$ 60,586	$302,928	$114.92
Current Expansion						
Major Trunk Systems:						
Charleston Trunk	$ 580,889	6.30	$ 36,596	$ 9,149	$ 45,745	$ 17.35
Channing Trunk	646,000	6.30	40,698	10,174	50,872	19.30
Total Current Expansion	$1,226,889		$ 77,294	$ 19,323	$ 96,617	$ 36.65
Total Existing Capital Investment and Current Expansion	$3,484,620		$319,636	$ 79,909	$399,545	$151.57
Future Expansion						
Treatment Plant	$5,000,000	3.66	$183,000	$ 45,750	$228,750	$ 86.79
Major Trunk System:						
Central	18,000	6.30	1,134	284	1,418	.53
East	864,700	6.30	54,476	13,619	68,095	25.83
West	350,000	6.30	22,050	5,512	27,562	10.46
Minor Trunk System:						
Foothills	90,000	68.06	61,254	15,314	76,568	29.04
Total Future Expansion	$6,322,700		$321,914	$ 80,479	$402,393	$152.65
Grand Total	$9,807,320		$641,550	$160,388	$801,938	$304.22
Summary						
Treatment Plant	$6,053,861	3.66	$221,754	$ 55,438	$277,192	$105.17
Major Trunk System	3,451,110	6.30	217,420	54,355	271,775	103.09
Minor Trunk System	297,349	68.06	202,376	50,595	252,971	95.96
Total	$9,807,320		$641,550	$160,388	$801,938	$304.22

AMENDMENT NO. 1 TO AGREEMENT

SEWAGE TRANSPORTATION, TREATMENT AND DISPOSAL TOWN OF LOS ALTOS HILLS

THIS AMENDMENT to Agreement No. 2876, made and entered into this 20th day of June, 1969, by and between the CITY OF PALO ALTO, a municipal corporation, hereinafter called "Palo Alto" and the TOWN OF LOS ALTOS HILLS, a municipal corporation, hereinafter called "Los Altos Hills",

W I T N E S S E T H :

WHEREAS, Palo Alto and Los Altos Hills entered into a joint use agreement on March 18, 1968 covering the transportation, treatment and disposal by Palo Alto of sewage emanating within a portion of the territorial limits of Los Altos Hills; and

WHEREAS, the City of Palo Alto and Los Altos Hills wish to supplement this agreement to provide for additional connection points; and

WHEREAS, Los Altos Hills will pay to Palo Alto certain monies for the connection.

NOW, THEREFORE, in consideration of their mutual covenants the parties hereto agree as follows:

1. SCOPE OF AMENDMENT. Palo Alto and Los Altos Hills agree that Contract No. 2876 dated the 18th day of March 1968 between Palo Alto and Los Altos Hills and paragraph (1) thereof is hereby amended to include points of connection designated thirteen (13) units, twenty-four (24) units, and twenty-five (25) units (30.622 acres gross), which additional connections are designated on EXHIBIT "D" attached hereto, incorporated herein and made a part hereof by reference. EXHIBIT "D" attached hereto for reference amends EXHIBIT "A" of Agreement No. 2876 above referred to.

2. PAYMENT. A connection charge of One Hundred Dollars ($100.00)/gross acre ($3,062.20) will be paid by the Town of Los Altos Hills to the City of Palo Alto in accordance with Sewer Reimbursement Agreement No. 2979 between the City of Palo Alto and Palo Alto Hills Golf and Country Club and Dan Dana for the connection designated twenty-five (25) units (30.622 Ac. Gross) on EXHIBIT "D".

ATTEST:

City Clerk

CITY OF PALO ALTO

BY

Mayor

APPROVED AS TO FORM:

Sr. Assistant City Attorney

APPROVED:

City Controller

APPROVED AS TO CONTENT:

Chief Utilities Engineer

ATTEST:

Town Clerk

TOWN OF LOS ALTOS HILLS

BY

Mayor

APPROVED AS TO FORM:

City Attorney

APPROVED AS TO CONTENT:

City Manager

AREA TO BE SEWERED
30.622 ACRES GROSS
27.530 ACRES NET

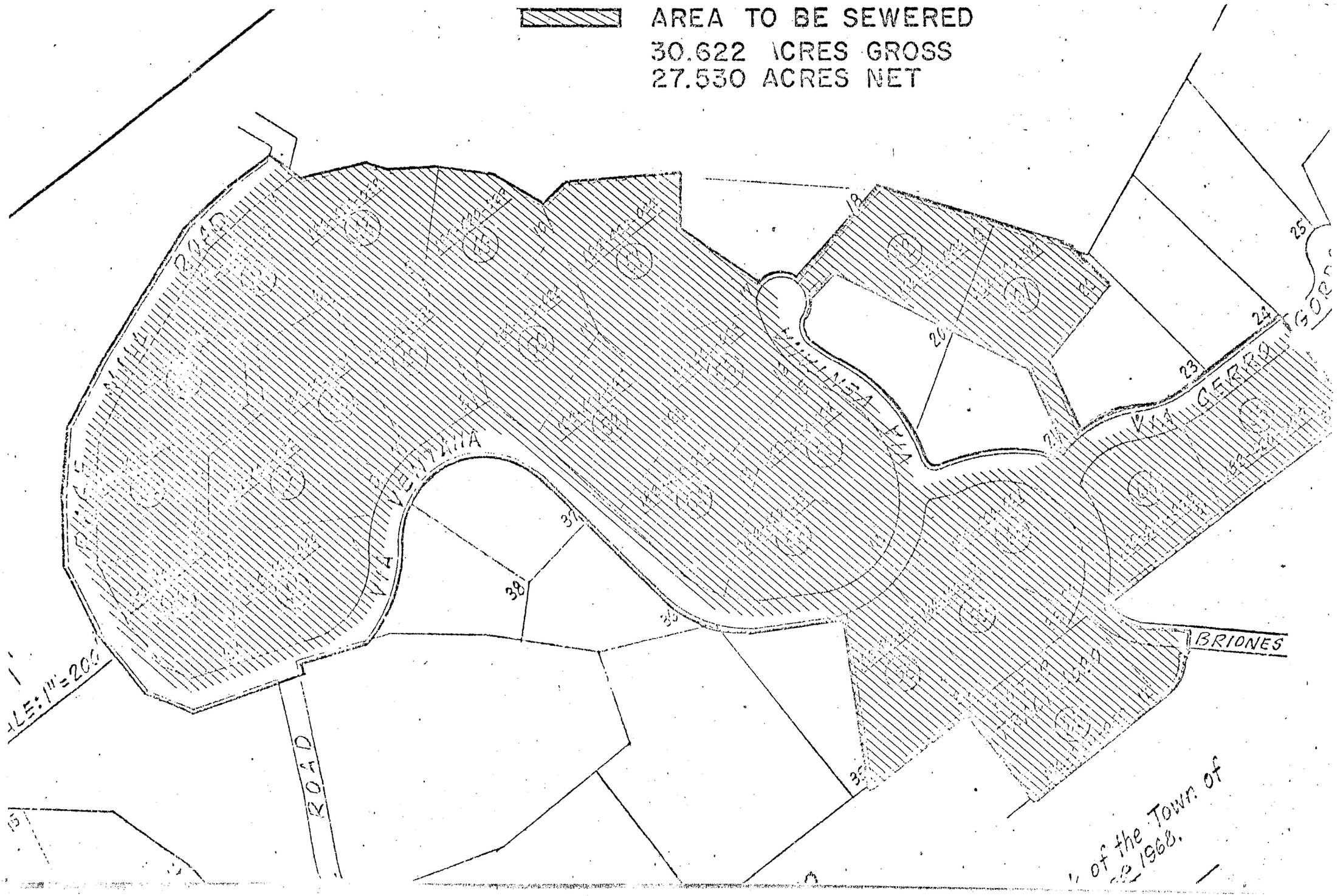

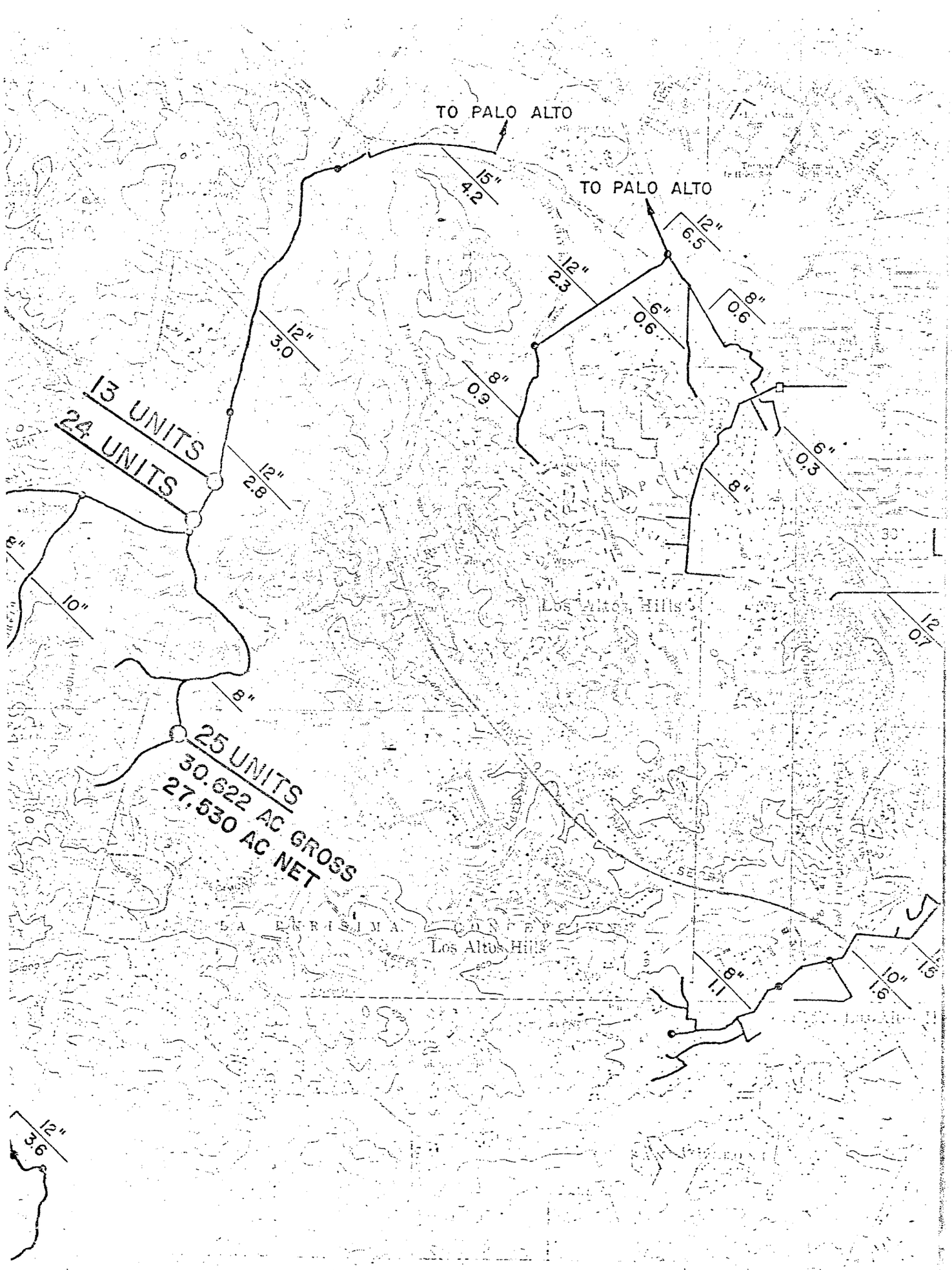
TO PALO ALTO
TO PALO ALTO
15" 4.2
12" 6.5
12" 2.3
8" 0.6
6" 0.6
12" 3.0
8" 0.9
13 UNITS
24 UNITS
12" 2.8
6" 0.3
8"
10"
12" 0.7
8"
25 UNITS
30.622 AC GROSS
27.530 AC NET
Los Altos Hills
Los Altos Hills
8" 1.1
10" 1.6
12" 3.6

EXHIBIT · D

ORIGINAL

(Agreement No. 287

AMENDMENT NO. 2 TO AGREEMENT

SEWAGE TRANSPORTATION, TREATMENT AND DISPOSAL

TOWN OF LOS ALTOS HILLS

THIS AMENDMENT to Agreement No. 2876, made and entered into this 31st day of March, 1970, by and between the CITY OF PALO ALTO, a municipal corporation, hereinafter called "Palo Alto" and the TOWN OF LOS ALTOS HILLS, a municipal corporation, hereinafter called "Los Altos Hills".

W I T N E S S E T H :

WHEREAS, Palo Alto and Los Altos Hills entered into a joint use agreement on March 18, 1968 covering the transportation, treatment and disposal by Palo Alto of sewage emanating within a portion of the territorial limits of Los Altos Hills; and

WHEREAS, Palo Alto and Los Altos Hills wish to supplement this agreement to authorize connection of and service to Christopher's Lane, and to authorize connection to the Palo Alto sewer line on Manuela Road and construction of a main and lateral in said Manuela Lane.

NOW, THEREFORE, in consideration of their mutual covenants the parties hereto agree as follows:

1. SCOPE OF AMENDMENT. Contract No. 2876 dated the 18th day of March, 1968 between the parties hereto is hereby amended as follows:

A. Los Altos Hills is hereby authorized to connect to Palo Alto's trunk sewer line at the point indicated on EXHIBIT "E" attached hereto and incorporated herein by reference, for the purpose of serving Christopher's Lane. Said EXHIBIT "E" amends EXHIBIT "A" of Agreement No. 2876 above referred to.

B. Los Altos Hills is hereby authorized to connect to the Palo Alto sewer on Manuela Road, to serve the property shown on

XHIBIT "G" attached hereto and by reference incorporated herein. Any lines constructed shall be the property of Los Altos Hills, and an encroachment permit therefor, pursuant to Chapter 12.12 of the Palo Alto Municipal Code, shall be obtained by Los Altos Hills. All costs of construction shall be paid by Los Altos Hills or the developer of property served thereby.

Except as herein modified, all other provisions of said agreement No. 2876 shall remain in full force and effect.

IN WITNESS WHEREOF, the parties hereto have caused this amendment to be executed the day and year first above written.

ATTEST:

City Clerk

APPROVED AS TO FORM:

Assistant City Attorney

APPROVED:

City Manager

APPROVED:

City Controller

ATTEST:

Town Clerk

APPROVED AS TO FORM:

City Attorney

APPROVED AS TO CONTENT:

City Manager

CITY OF PALO ALTO

BY

Mayor

APPROVED AS TO CONTENT:

Chief Utilities Engineer

~~APPROVED~~:

~~City~~

TOWN OF LOS ALTOS HILLS

BY

Mayor

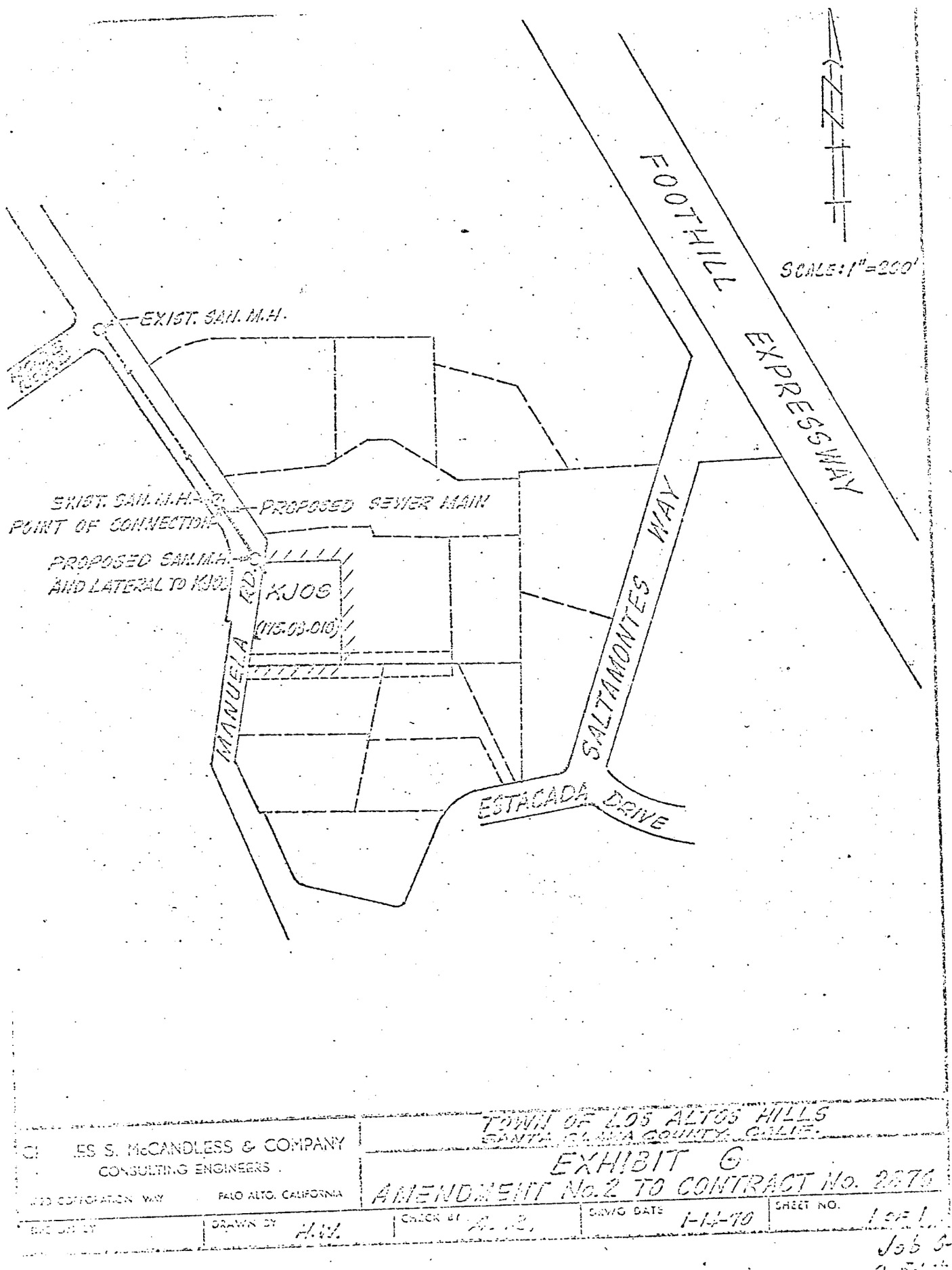

CHARLES S. McCANDLESS & COMPANY CONSULTING ENGINEERS 3173 COTTAGE WAY PALO ALTO, CALIFORNIA	TOWN OF LOS ALTOS HILLS SANTA CLARA COUNTY, CALIF. EXHIBIT G AMENDMENT No. 2 TO CONTRACT No. 2876			
DATE OFFICE	DRAWN BY H.W.	CHECK BY	DRWG DATE 1-14-70	SHEET NO. 1 OF 1

Job 3-1-70

---- .. of Agreement No. 2876 above referred to.

B. Los Altos Hills is hereby authorized to connect to the Palo Alto sewer on Manuela Road, to serve the property shown on

W.G.S. DEPT.

For Sewage Transportation Treatment & Disposal

Contra for Agreement No. 2375

Explanation Date

Original Contract

JARVIS WAY

AMENDMENT NO. 3 TO AGREEMENT FOR

SEWAGE TRANSPORTATION, TREATMENT AND DISPOSAL

TOWN OF LOS ALTOS HILLS

THIS AMENDMENT to Agreement No. 2876, made and entered into this 16th day of April, 1974, by and between the CITY OF PALO ALTO, a municipal corporation, hereinafter called "Palo Alto" and the TOWN OF LOS ALTOS HILLS, a municipal corporation hereinafter called "Los Altos Hills".

W I T N E S S E T H :

WHEREAS, Palo Alto and Los Altos Hills entered into a joint use agreement on March 18, 1968, covering the transportation, treatment and disposal by Palo Alto of sewage emanating within a portion of the territorial limits of Los Altos Hills; and

WHEREAS, Palo Alto and Los Altos Hills wish to supplement this agreement to authorize connection of and service to Jarvis Way Area, and to authorize connection to the Palo Alto Sewer line at Jarvis Way and Old Page Mill Road and construction of a main in said location.

NOW, THEREFORE, in consideration of their mutual covenants the parties hereto agree as follows:

1. SCOPE OF AMENDMENT. Contract No. 2876, dated the 18th day of March, 1968, between the parties hereto is hereby amended as follows:

A. Los Altos Hills is hereby authorized to connect to Palo Alto's trunk sewer line at the point indicated on Los Altos Hills Drawing Number LAH 501A of EXHIBIT "H", which EXHIBIT is attached hereto and incorporated herein by reference, for the purpose of serving Jarvis Way Area. Said EXHIBIT "H" includes Los Altos Hills drawings numbered LAH 500A, LAH 501A, LAH 502A and LAH 503A, and amends EXHIBIT "A" of Agreement No. 2376, above referred to.

B. Los Altos Hills is hereby authorized to connect to the Palo Alto Sewer in said location to serve the property shown as the Jarvis Way Service Area on Los Altos Hills Drawing Number LAH 503A of EXHIBIT "H", and other such properties within the Town of Los Altos Hills shown as the adjacent service area on Drawing Number LAH 503A of EXHIBIT "H". Any lines constructed shall be the property of Los Altos Hills, and an encroachment permit therefor, pursuant to Chapter 12.12 of the Palo Alto

Municipal Code, shall be obtained by Los Altos Hills. All costs of construction shall be paid by Los Altos Hills or the developer of property served thereby.

Except as herein modified, all other provisions of said agreement No. 2876 shall remain in full force and effect.

IN WITNESS WHEREOF, the parties hereto have caused this amendment to be executed the day and year first above written.

ATTEST:

City Clerk

APPROVED AS TO FORM:

Assistant City Attorney

APPROVED:

City Manager

APPROVED:

City Controller

ATTEST:

Town Clerk

APPROVED AS TO FORM:

City Attorney

APPROVED AS TO CONTENT:

City Manager

CITY OF PALO ALTO

By

Mayor

APPROVED AS TO CONTENT:

Chief Engineer for Water, Gas & Sewers

APPROVED:

TOWN OF LOS ALTOS HILLS

By

Mayor

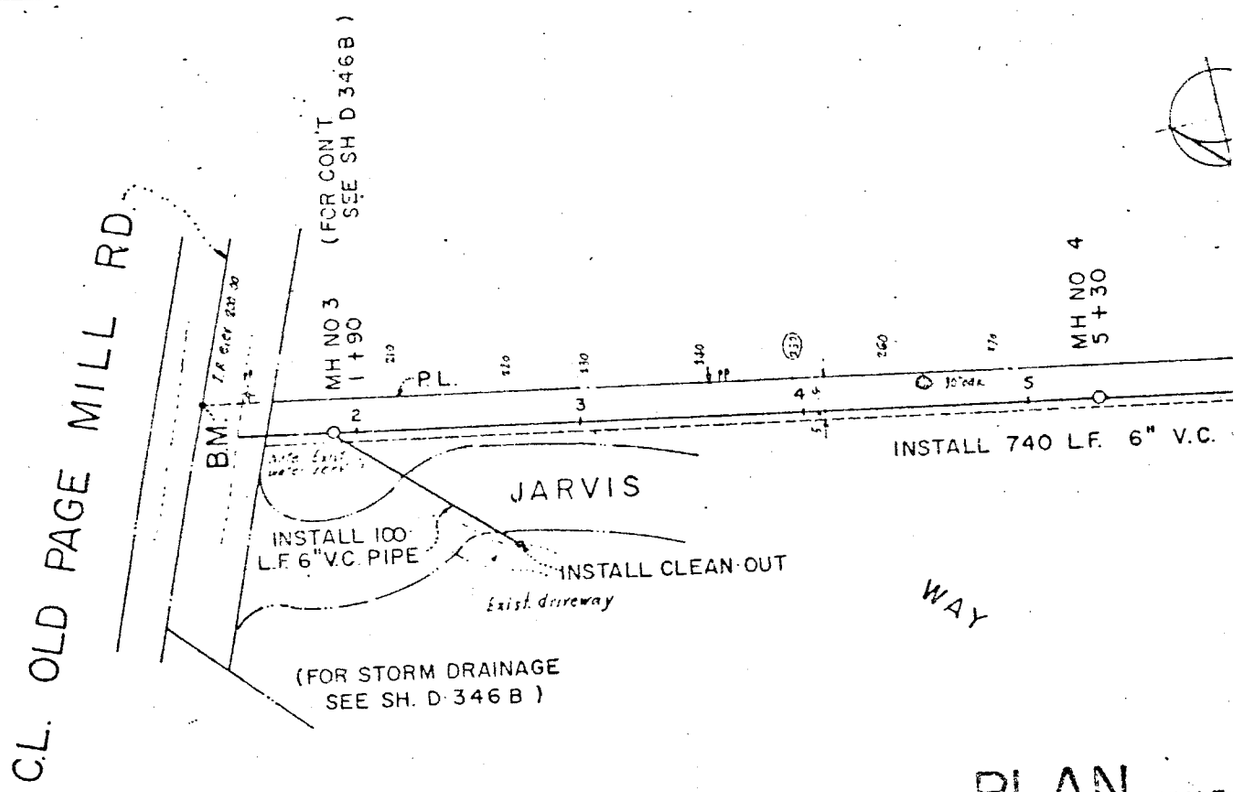

PLAN SCALE:

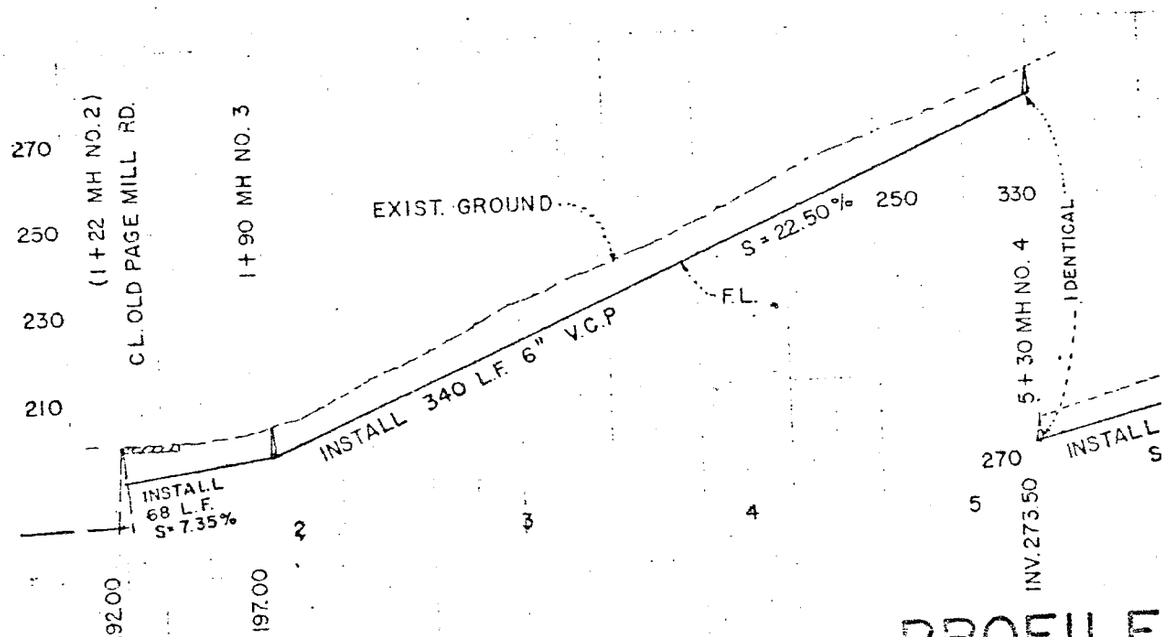

PROFILE

JOHN W. RILEY - CIVIL ENGINEER - LOS

EXHIBIT "H". Any lines constructed shall be the property of Los Altos Hills, and an encroachment permit therefor, pursuant to Chapter 12.12 of the Palo Alto

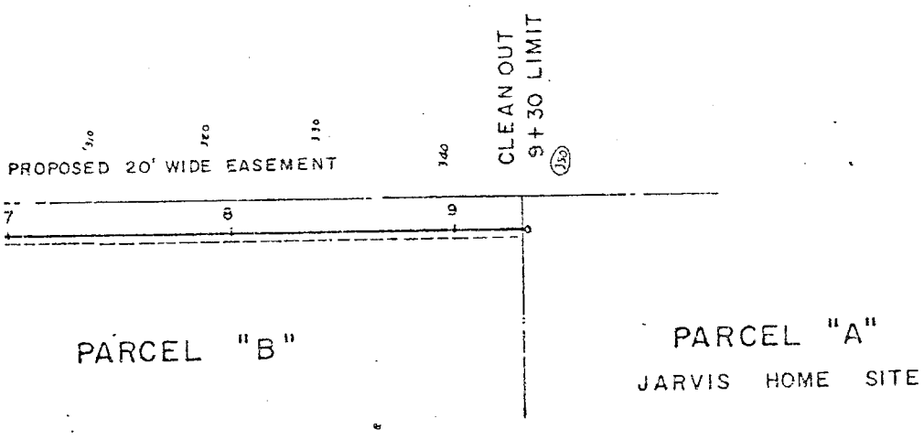

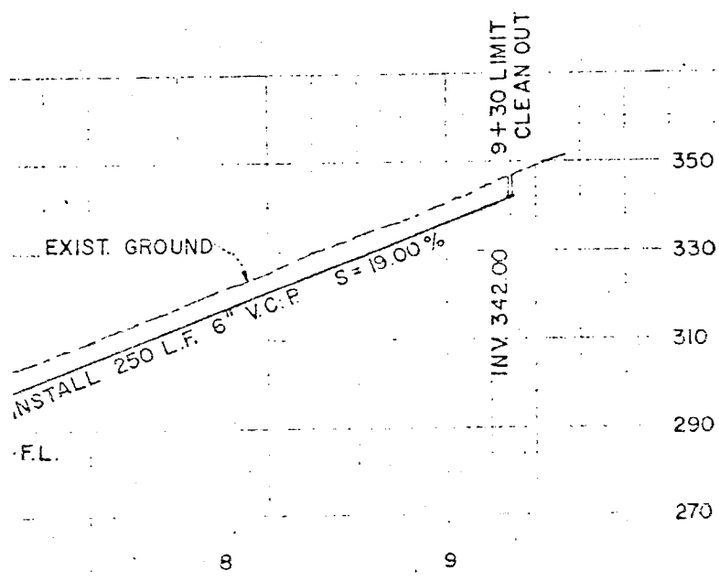

CONSTRUCTION NOTES:

1. All work and all material shall conform to the requirements of the Town of Los Altos Hills, Uniform Standard Specifications, 1969, and the prevailing rules of the Engineer.
2. The Town Engineer is authorized to require modifications during construction where required by public necessity.
3. The Town Engineer's office shall be notified forty-eight hours prior to commencement of construction operations.
4. All [illegible] shall be performed by a licensed civil engineer or the Contractor's [illegible] to acceptance of the work.
5. [illegible] shall be to the finish grade [illegible] finish [illegible].
6. [illegible] plans must be submitted to Town prior to [illegible]
7. Sewer [illegible] the requirements of the Town [illegible] and maintenance [illegible] and cleaned and [illegible] a minimum of [illegible]
8. [illegible] Pacific Gas and Electric Co., [illegible] Telephone Co., [illegible] Cable TV and [illegible]
9. Sewer [illegible] line set flush with the ground in the road line of Fremont Hill Rd. at the [illegible] Jarvis Property [illegible] as shown on the plan. Elevation [illegible].
10. Your attention is directed to the Town of Los Altos Hills Standard Specifications for Subdivisions, [illegible]

APPROVED BY
DATE 10/11/73
ALEXANDER D. RUSSELL
CITY ENGINEER
TOWN OF LOS ALTOS HILLS
CERT. NO. 5708

IN-TRACT SEWER SYSTEM
IMPROVEMENT PLAN
JARVIS SANITARY SEWER
TOWN OF LOS ALTOS HILLS

SCALE: 1" = 40' 72-28 SEPT 1973

D-346 C

Sept 20, 1973
CT. No. 11064

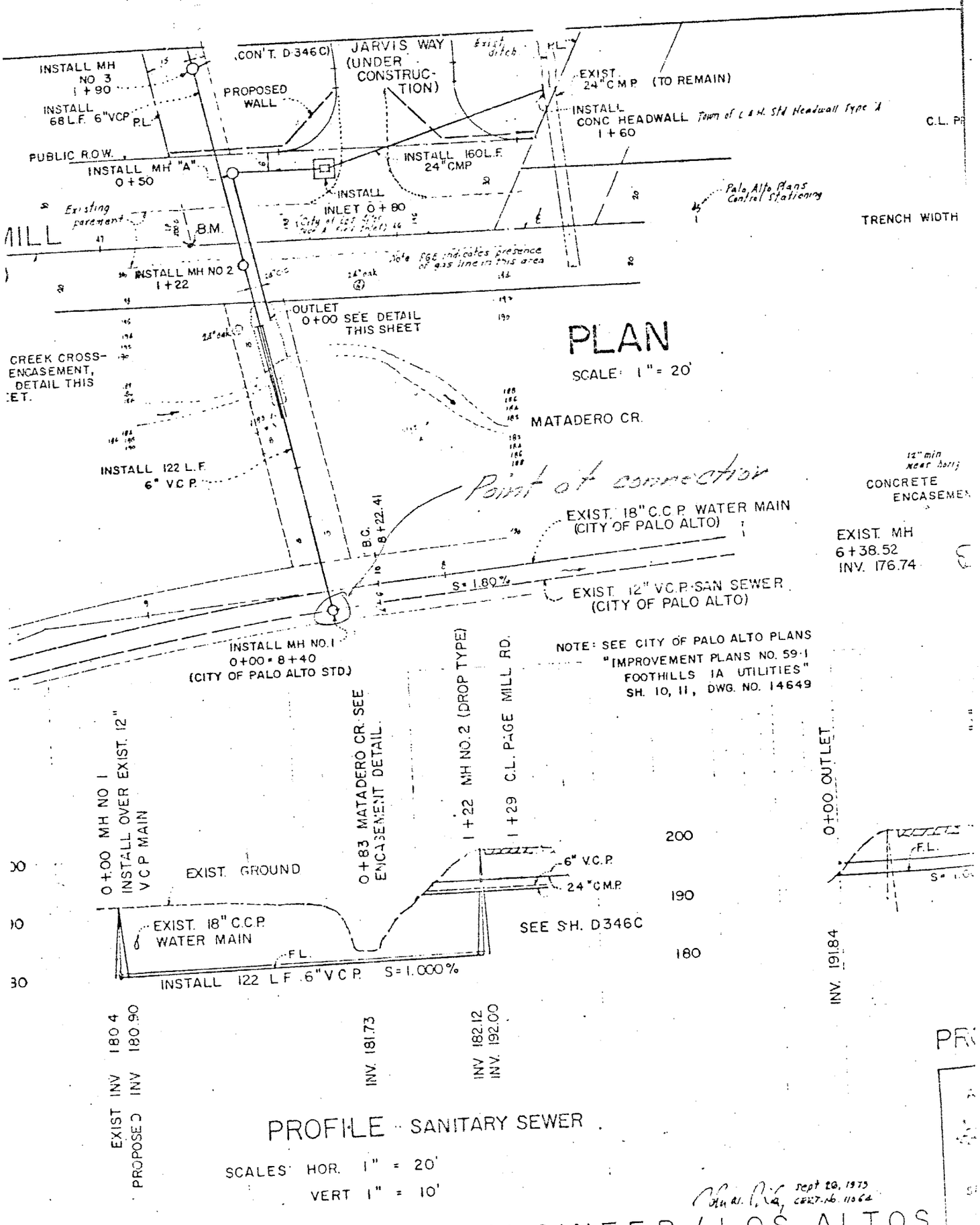
INSTALL MH NO 3 1+90
INSTALL 68 L.F. 6" VCP
P.L.
PUBLIC R.O.W.
INSTALL MH "A" 0+50
(CON'T. D-346C)
JARVIS WAY (UNDER CONSTRUCTION)
PROPOSED WALL
INSTALL 160 L.F. 24" CMP
INSTALL INLET 0+80
EXIST. 24" C.M.P. (TO REMAIN)
INSTALL CONC HEADWALL 1+60
Town of L.A.H. Std Headwall Type A
C.L. PR
Palo Alto Plans Control Stationing
TRENCH WIDTH
Existing pavement
B.M.
MILL
INSTALL MH NO 2 1+22
OUTLET 0+00 SEE DETAIL THIS SHEET
CREEK CROSS-ENCASEMENT, DETAIL THIS SHEET.
PLAN
SCALE: 1" = 20'
MATADERO CR.
INSTALL 122 L.F. 6" V.C.P.
Point of connection
B.C. 8+22.41
EXIST. 18" C.C.P. WATER MAIN (CITY OF PALO ALTO)
S = 1.80%
EXIST. 12" V.C.P. SAN SEWER (CITY OF PALO ALTO)
12" min near bottom
CONCRETE ENCASEMENT
EXIST. MH 6+38.52 INV. 176.74
INSTALL MH NO. 1 0+00 = 8+40 (CITY OF PALO ALTO STD.)
NOTE: SEE CITY OF PALO ALTO PLANS "IMPROVEMENT PLANS NO. 59-1 FOOTHILLS IA UTILITIES" SH. 10, 11, DWG. NO. 14649
0+00 MH NO 1 INSTALL OVER EXIST. 12" V.C.P. MAIN
EXIST. GROUND
0+83 MATADERO CR. SEE ENCASEMENT DETAIL.
1+22 MH NO. 2 (DROP TYPE)
1+29 C.L. PAGE MILL RD.
6" V.C.P.
24" C.M.P.
SEE SH. D346C
EXIST. 18" C.C.P. WATER MAIN
F.L.
INSTALL 122 L.F. 6" V.C.P. S = 1.000%
200
190
180
0+00 OUTLET
F.L.
INV. 191.84
EXIST INV 180.4
PROPOSED INV 180.90
INV. 181.73
INV 182.12
INV. 192.00
PROFILE - SANITARY SEWER
SCALES: HOR. 1" = 20'
VERT 1" = 10'
Sept 20, 1973
JOHN W. RILEY - CIVIL ENGINEER - LOS ALTOS

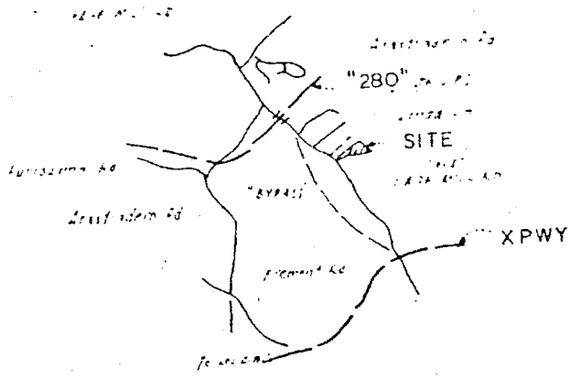

VICINITY MAP

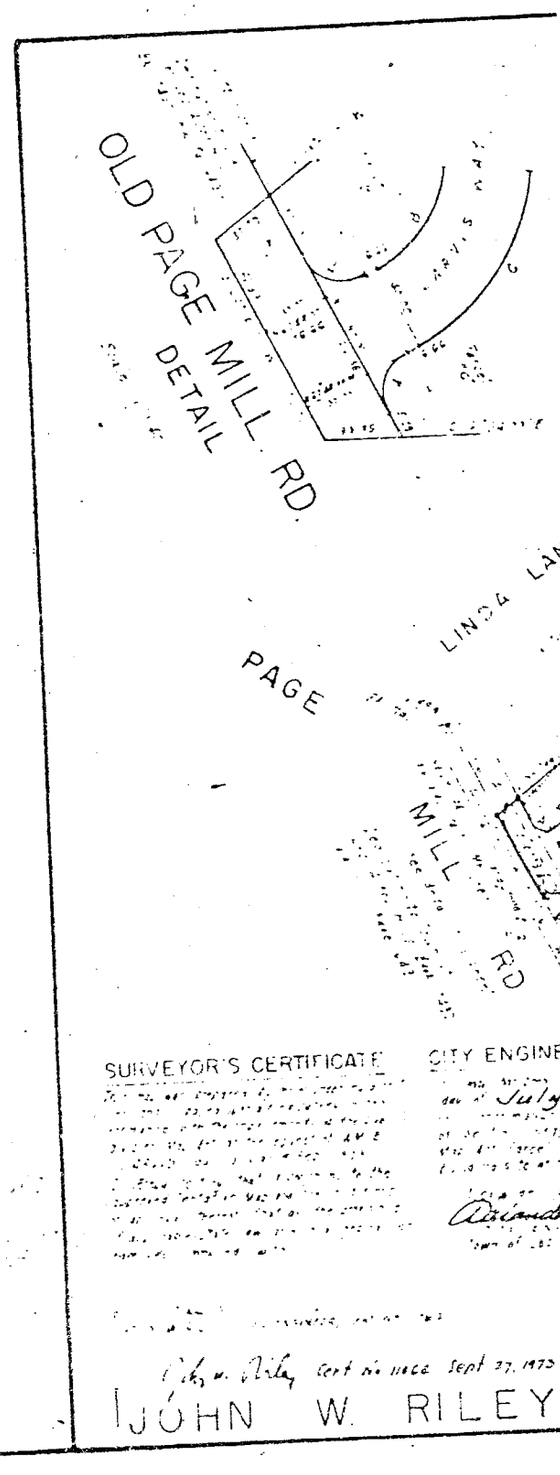

SHEET SCHEDULE:

A. LOCATION INFORMATION.
B. MATADERO CREEK CROSSING.
C. INTRACT SEWER SYSTEM.

APPROVED BY
DATE 10/16/73
ALEXANDER D RUSSELL
CITY ENGINEER
TOWN OF LOS ALTOS HILLS
CERT NO 5708

EXHIBIT "H". Any lines constructed shall be the property of Los Altos Hills, and an encroachment permit therefor, pursuant to Chapter 12.12 of the Palo Alto

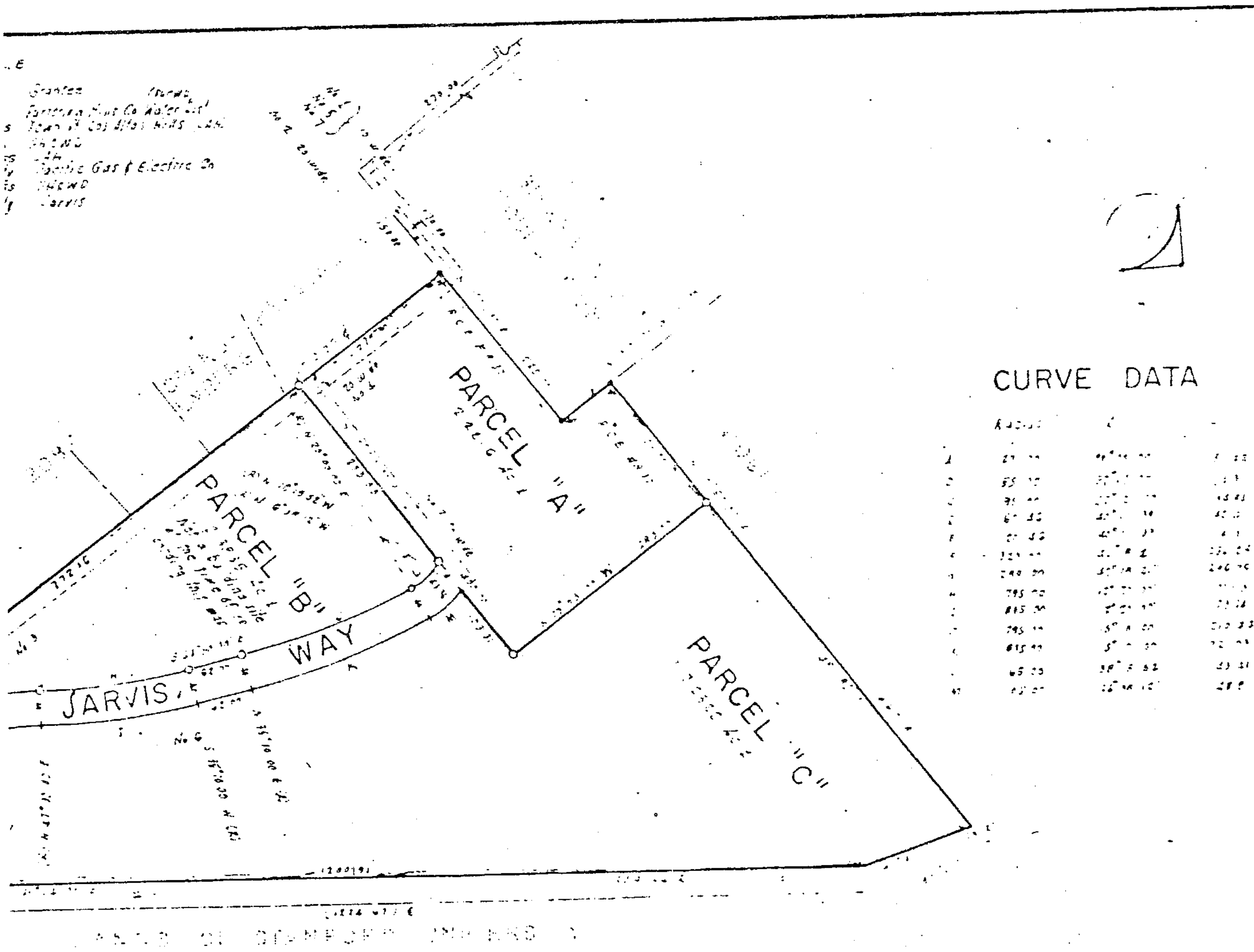

RECORDER'S CERTIFICATE

BASIS OF BEARINGS

LEGEND

NOTES

LOCATION INFORMATION

IMPROVEMENT PLAN
PARCEL MAP

PREPARED FOR WM. E. JARVIS

TOWN OF LOS ALTOS HILLS
CALIFORNIA

SCALE

SEPT 1973

ENGINEER LOS ALTOS

D·346A

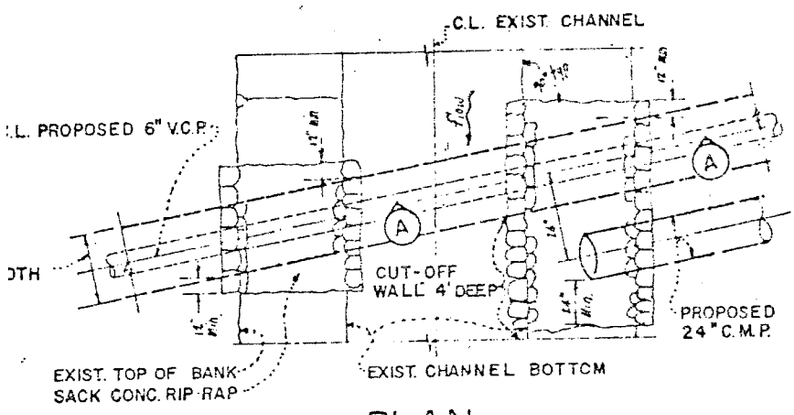

PLAN
NOT TO SCALE

9. ALL PUBLIC AGENCIES INVOLVED MUST BE NOTIFIED 48 HRS. MIN. BEFORE START OF CONSTRUCTION

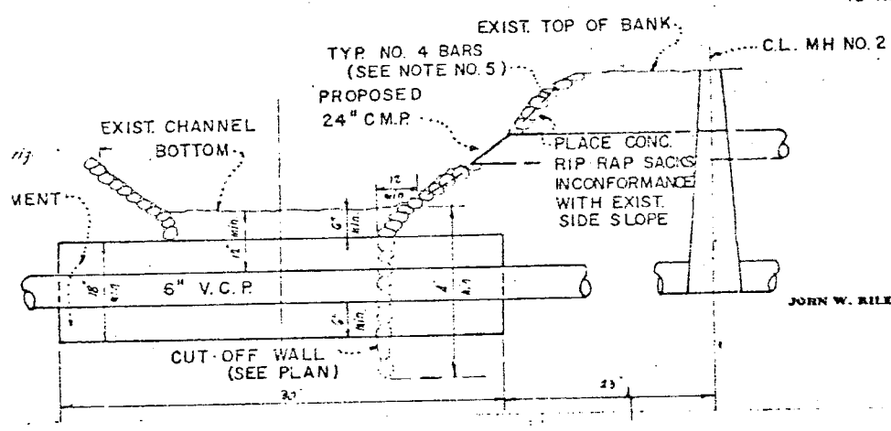

SECTION A-A
NOT TO SCALE

NOTE: FOR LOS ALTOS HILLS CONSTRUCTION NOTES SEE SHEET D 346 C

JOHN W. RILEY • CIVIL ENGINEER • P. O. BOX 111 • LOS ALTOS 94022 • 948-6065

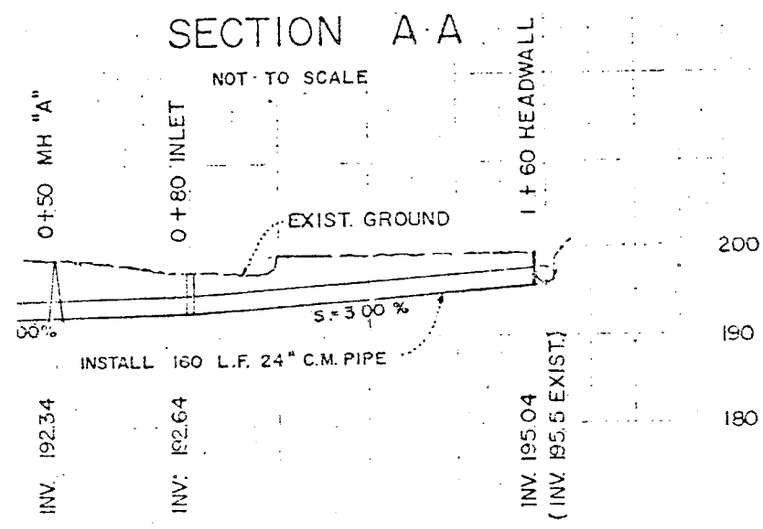

APPROVED BY:
DATE: 10/9/73
By REMMEL
CITY OF PALO ALTO

OFILE STORM DRAIN

APPROVED BY:
DATE: 10/15/73
PERMIT # 73124
SANTA CLARA COUNTY FLOOD CONTROL DISTRICT

APPROVED BY:
DATE: 10/16/73
Alexander D. Russell
BY RUSSELL
ALEXANDER D. RUSSELL
CITY ENGINEER
TOWN OF LOS ALTOS HILLS
CERT. NO. 5708

MATADERO CREEK CROSSING
IMPROVEMENT PLAN
JARVIS SANITARY SEWER
TOWN OF LOS ALTOS HILLS
SCALE: 1" = 20' 72 28 SEPT. 1973

LAH-50A D·346B

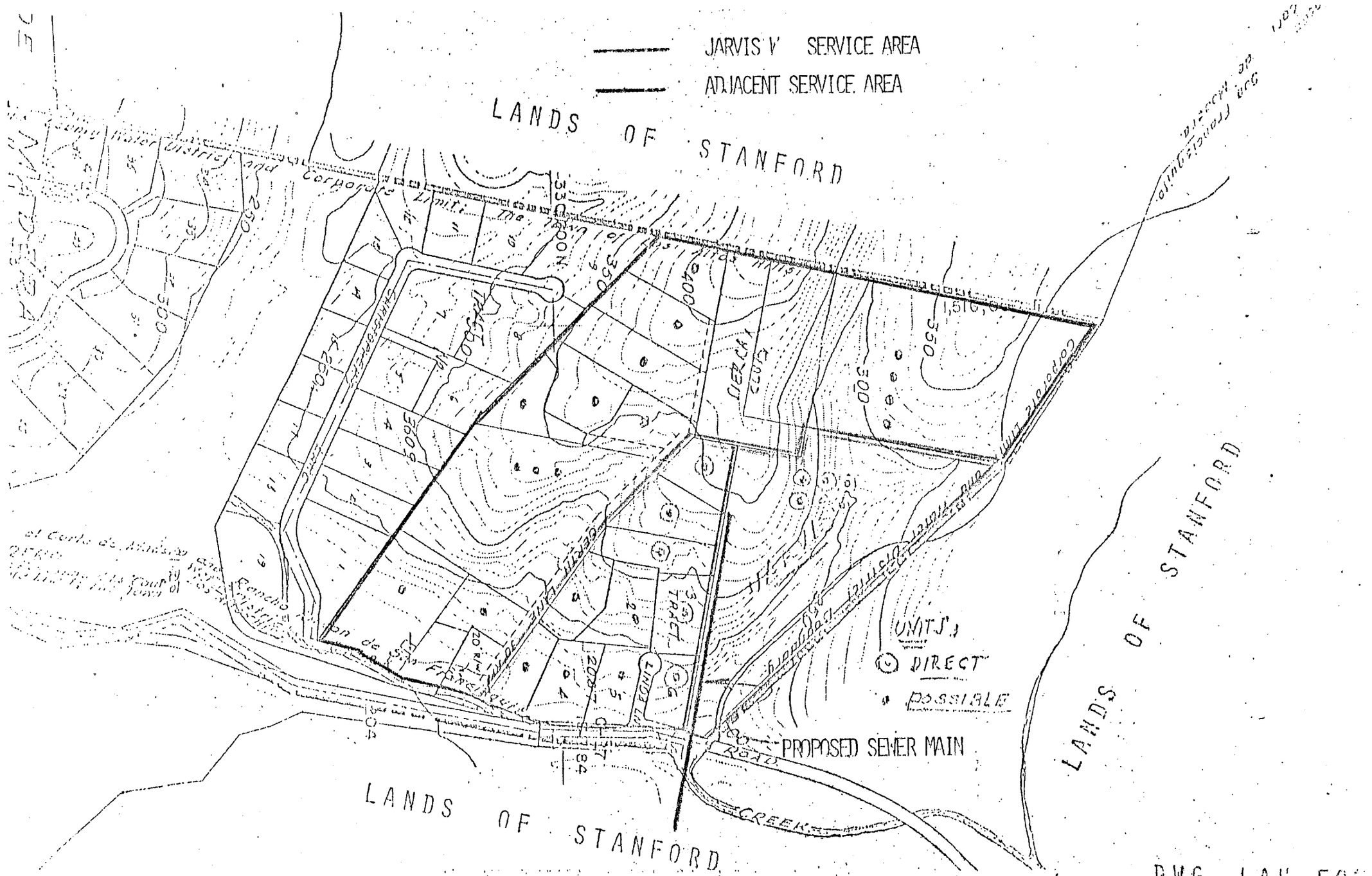
JARVIS V SERVICE AREA
ADJACENT SERVICE AREA
LANDS OF STANFORD
LANDS OF STANFORD
LANDS OF STANFORD
UNITS
DIRECT
POSSIBLE
PROPOSED SEWER MAIN
CREEK
ROAD
DERBY
TRACT
DWG LAN 50

Contract No. 2876 Amend #4
Sewage Transportation
Los Altos Hills
Expiration Date

W.G.S. Dept.

W. G. S. DEPT

(Agreement No. 2876)

RECEIVED
JUL 16 1974
WATER-GAS-SEWER DEPARTMENT

AMENDMENT NO. 4 TO AGREEMENT FOR

SEWAGE TRANSPORTATION, TREATMENT AND DISPOSAL

TOWN OF LOS ALTOS HILLS

MATADERO OAKS SUBDIVISION TRACT NO. 5098

THIS AMENDMENT to Agreement No. 2876, made and entered into this 8th day of July, 1974, by and between the CITY OF PALO ALTO, a municipal corporation, hereinafter called "Palo Alto" and the TOWN OF LOS ALTOS HILLS, a municipal corporation, hereinafter called "Los Altos Hills".

W I T N E S S E T H :

WHEREAS, Palo Alto and Los Altos Hills entered into a joint use agreement on March 18, 1968, covering the transportation, treatment and disposal by Palo Alto of sewage emanating within a portion of the territorial limits of Los Altos Hills; and

WHEREAS, Palo Alto and Los Altos Hills wish to supplement this agreement to provide for additional connections and service to Matadero Oaks Subdivision, Tract No. 5098, and to authorize six (6) separate connections to the Palo Alto sewer line in Page Mill Road, and

WHEREAS, Los Altos Hills will pay to Palo Alto certain monies for the connection.

NOW, THEREFORE, in consideration of their mutual convenants the parties hereto agree as follows:

1. SCOPE OF AMENDMENT. Palo Alto and Los Altos Hills agree that Contract No. 2876, dated the 18th day of March, 1968, between Palo Alto and Los Altos Hills and paragraph (1) thereof is hereby amended to include points of connection designated as Point One (1) through Six (6), inclusive, forty-one units total (75.6121 acres gross), which additional connections are designated and shown on EXHIBIT "I", Drawing No. LAH-5053, attached hereto, incorporated herein and made a part hereof by reference. Said EXHIBIT "I" attached thereto for reference amends EXHIBIT "A" of Agreement No. 2876, above referred to.

Contract No. 2876 Amend. #1

2. Any lines constructed shall be the property of Los Altos Hills, and an encroachment permit therefor, pursuant to Chapter 12.12 of the Palo Alto Municipal Code, shall be obtained by Los Altos Hills. All costs of construction shall be paid by Los Altos Hills or the developer of property served thereby.

PAYMENT. A connection charge of one hundred dollars ($100.00) per gross acre $7,561.21 will be paid by the Town of Los Altos Hills to the City of Palo Alto in accordance with Sewer Reimbursement Agreement No. 2979, between the City of Palo Alto and Palo Altos Hills Golf and Country Club and Dan Dana for the connection of all forty-one (41) lots, forty-one (41) units (75.6121 acres gross) as shown on EXHIBIT "I", Drawing No. LAH-505B, referred to above.

Except as herein modified, all other provisions of said Agreement No. 2876 shall remain in full force and effect.

IN WITNESS WHEREOF, the parties hereto have caused this amendment to be executed the day and year first above written.

ATTEST:

City Clerk

APPROVED AS TO FORM:

Assistant City Attorney

APPROVED:

City Mangger

CITY OF PALO ALTO

By

Mayor

APPROVED AS TO CONTENT:

Chief Engineer for Water, Gas and Sewer

APPROVED:

APPROVED:

City Controller

TOWN OF LOS ALTOS HILLS

By

Mayor

ATTEST:

Town Clerk

APPROVED AS TO FORM:

City Attorney

APPROVED AS TO CONTENT:

City Manager

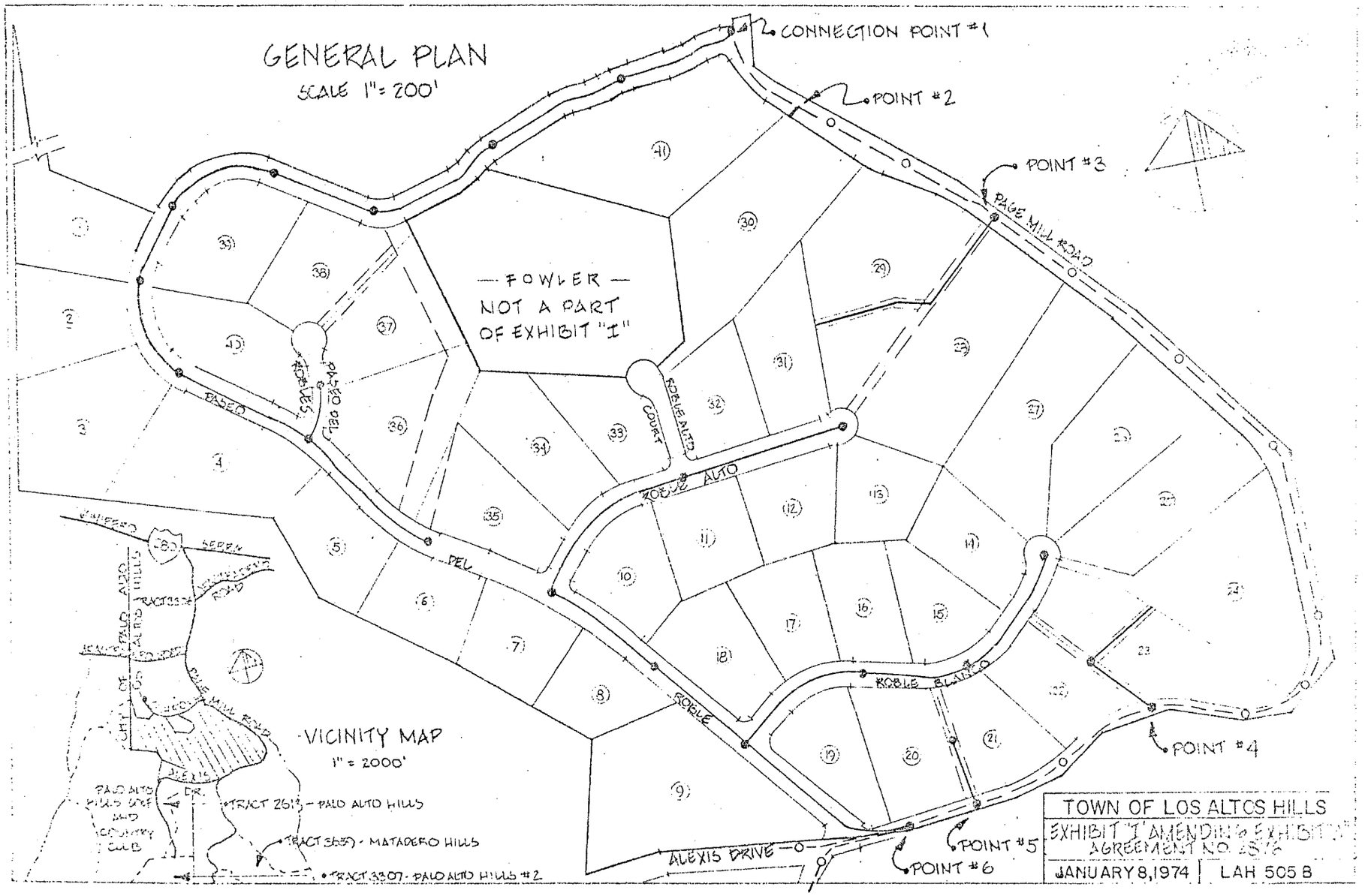
GENERAL PLAN
SCALE 1" = 200'
CONNECTION POINT #1
POINT #2
POINT #3
POINT #4
POINT #5
POINT #6
PAGE MILL ROAD
— FOWLER —
NOT A PART
OF EXHIBIT "I"
ROBLE ALTO
ROBLE BLANCO
ROBLE
COURT
PEU
PASEO
SERRANO
ALEXIS DRIVE
VICINITY MAP
1" = 2000'
TRACT 2613 - PALO ALTO HILLS
TRACT 3557 - MATADERO HILLS
TRACT 3307 - PALO ALTO HILLS #2
TOWN OF LOS ALTOS HILLS
EXHIBIT "I" AMENDING EXHIBIT "A"
AGREEMENT NO. 2576
JANUARY 8, 1974
LAH 505 B

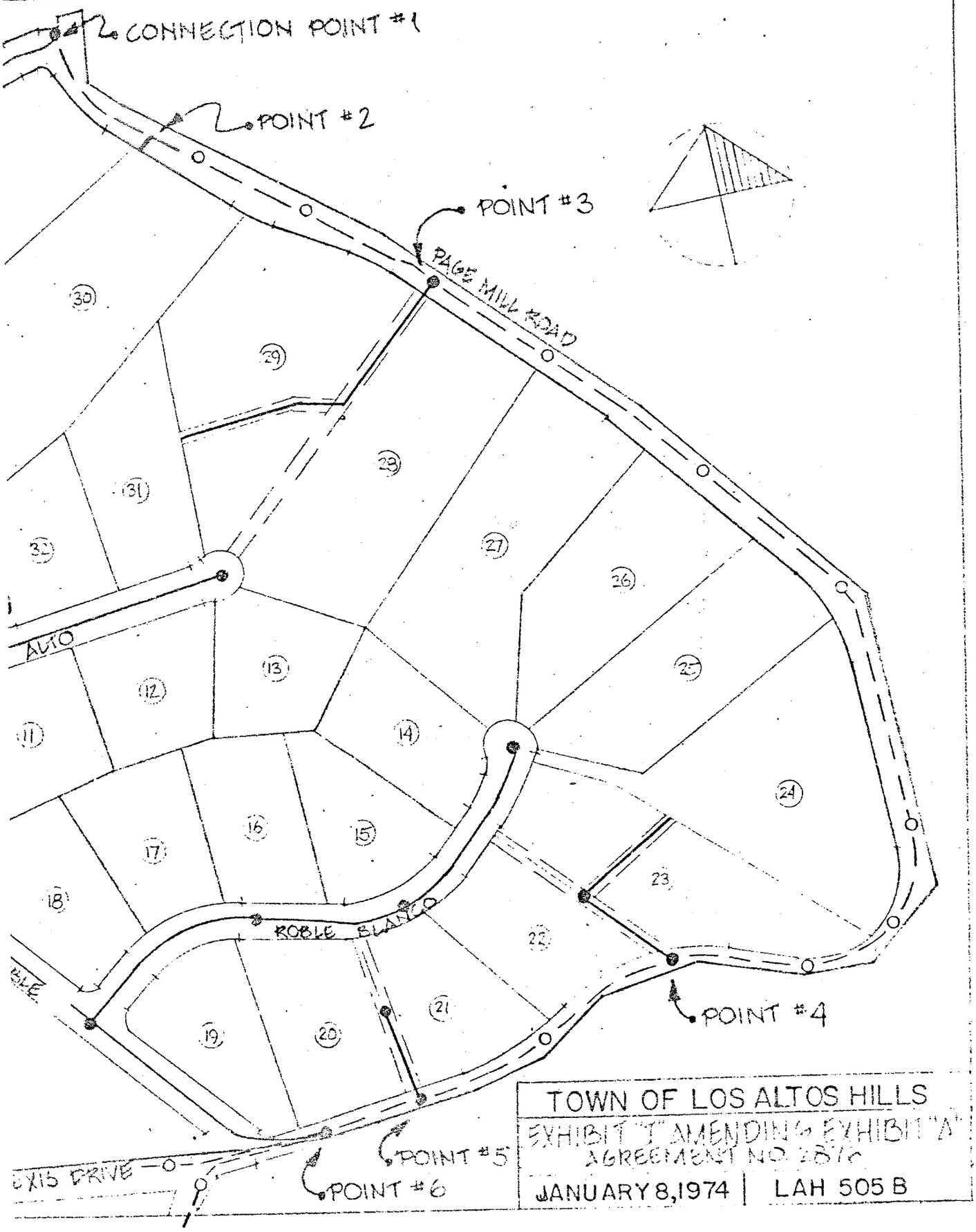

TOWN OF LOS ALTOS HILLS

EXHIBIT "I" AMENDING EXHIBIT "A"
AGREEMENT NO. 2876

JANUARY 8, 1974 | LAH 505 B

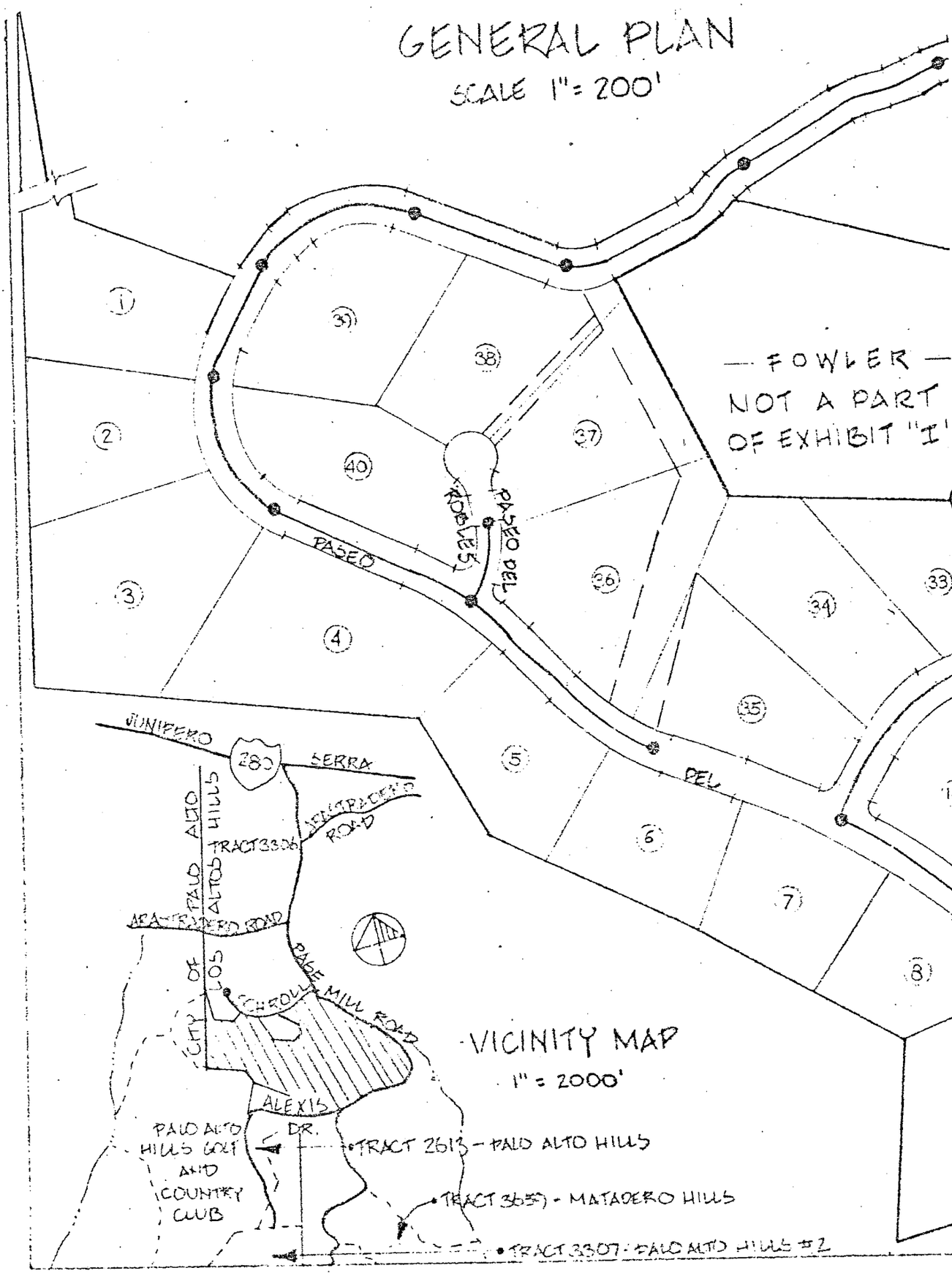

a part hereof by reference. Said EXHIBIT "I" attached thereto for reference amends EXHIBIT "A" of Agreement No. 2876, above referred to.

(415) 329-2271

November 2, 1977

Town of Los Altos Hills
Utilities Department
26379 Fremont Road
Los Altos Hills, CA 94022

Gentlemen:

We are enclosing herewith a fully executed copy of Amendment No. 5 to Agreement for Sewage Transportation, Treatment and Disposal-Town of Los Altos Hills.

You may retain the enclosed for your files.

Very truly yours,

CITY OF PALO ALTO

J. D. Brodie
Director of Purchasing Services

JDB:sk

Enclosure

RECEIVED
CITY OF PALO ALTO
CALIFORNIA
NOV 3 10 48 AM '77
CITY CLERK'S OFFICE

Contract No. Amend. #5 - 2876
Acct. No.
For Sewage Transportation etc.
Contractor Town of Los Altos Hills
Expiration Date

Original Contract

UTILITIES DEPARTMENT

AMENDMENT NO. 5 TO AGREEMENT FOR

SEWAGE TRANSPORTATION, TREATMENT AND DISPOSAL

TOWN OF LOS ALTOS HILLS

THIS AMENDMENT to Agreement No. 2876, made and entered into this 5th day of October, 1977, by and between the CITY OF PALO ALTO, a municipal corporation, hereinafter called "Palo Alto" and the TOWN OF LOS ALTOS HILLS, a municipal corporation hereinafter called "Los Altos Hills".

W I T N E S S E T H:

WHEREAS, Palo Alto and Los Altos Hills entered into a joint use agreement on March 18, 1968, covering the transportation, treatment and disposal by Palo Alto of sewage emanating within a portion of the territorial limits of Los Altos Hills; and,

WHEREAS, Palo Alto and Los Altos Hills wish to supplement this agreement to authorize connection of and service of the Lands of A.C. and Dorothy L. Baumgartner, and to authorize connection to the Palo Alto Sewer line approximately eighty (80) feet southerly of Gerth Lane and construction of a main in said location.

NOW, THEREFORE, in consideration of their mutual covenants the parties hereto agree as follows:

1. SCOPE OF AMENDMENT. Contract No. 2876, dated the 18th of March, 1968, between the parties hereto is hereby amended as follows:

A. Los Altos Hills is hereby authorized to connect to Palo Alto's trunk sewer line at the point indicated on Los Altos Hills Drawing Number LAH 1038-B of Exhibit "I", which Exhibit is attached hereto and incorporated herein by reference, for the purpose of serving the Lands of A.C. and Dorothy L. Baumgartner. Said Exhibit

"I" amends Exhibit "A" of Agreement No. 2876, above referenced to.

B. Los Altos Hills is hereby authorized to connect to the Palo Alto Sewer in said location to serve the property shown as the Baumgartner Property on Los Altos Hills Drawing Number LAH 1038-B of Exhibit "I", and other such properties within the Town of Los Altos Hills shown as the adjacent service area on Drawing Number LAH 1039 B of Exhibit "I". Any lines constructed shall be the property of Los Altos Hills, and an encroachment permit therefor, pursuant to Chapter 12.12 of the Palo Alto Municipal Code, shall be obtained by Los Altos Hills. All costs of construction shall be paid by Los Altos Hills or the developer of property served thereby.

Except as herein modified, all other provisions of said Agreement No. 2876 shall remain in full force and effect.

IN WITNESS WHEREOF, the parties hereto have caused this amendment to be executed the day and year first written above.

CITY OF PALO ALTO

By _____ Mayor

ATTEST:

_____ City Clerk

APPROVED AS TO FORM:

_____ Assistant City Attorney

APPROVED:

_____ City Manager

APPROVED:

_____ City Controller

APPROVED AS TO CONTENT:

_____ Chief Engineer for Water, Gas & Sewers

TOWN OF LOS ALTOS HILLS

ATTEST:

By Keith M. Brown
Mayor

Robert S. Pace
City Clerk

APPROVED AS TO FORM:

Frank Gillis
City Attorney

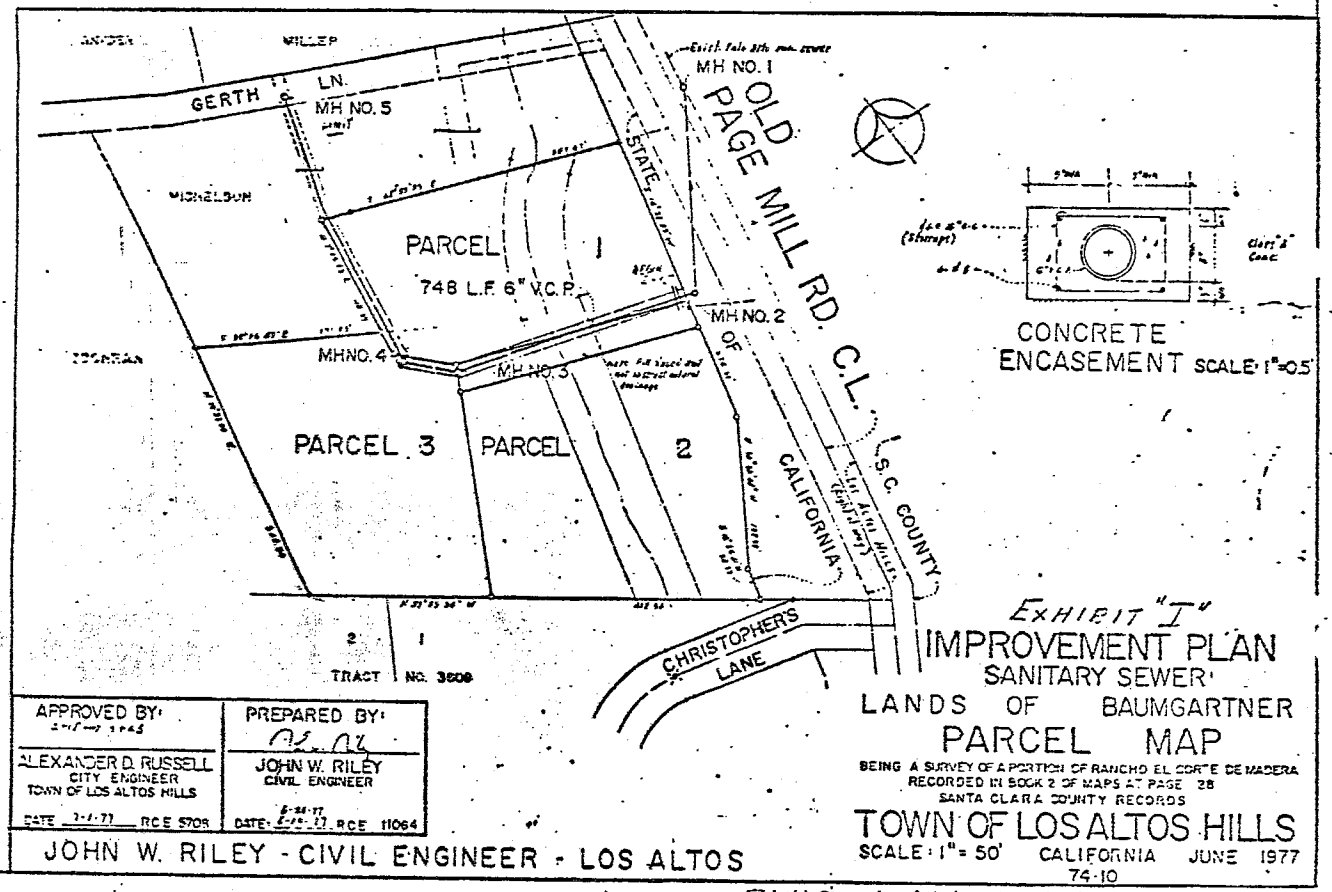

DWG. LAH 1058-B D-375 1/

2. The State of California [illegible] _____

Dated _____ _____

3. Connection to this line may not allowed until inspected and inspected to Site of [illegible], subject to the site requirements.

4. Exterior S.S. mains shall be [illegible] and replaced according to Section _____, L.A.M. [illegible].

5. "Related" landscaping and irrigation system shall be replaced to the satisfaction of Transportation Department, Office of Joint Use, The Circulatell. "Grade Sc. [illegible]

6. Trench shall be compacted to 90% of maximum in accordance with S.A.M.B.O. 370. Permit of [illegible] will be required. Pavement replacement shall be 12" A.B., 3-1/2" A.C. pavement.

7. Excavation cover to be "Hell and air tested".

8. All work to be inspected to requirements of Town of Los Altos Hills.

9. All sewer components disturbed during the course of construction shall be replaced prior to acceptance by Town of Los Altos Hills.

10. Sewer laterals shall be marked with 2" x 4" redwood post, 4' minimum above ground and marked with letter "S". "As Built" plans shall be marked by Contractor, sewer location with reference to monument monuments. All lat. connections to main to be 2" x 4" wye.

11. Sewer laterals shall be installed 3' below finish grade on property line unless authorized otherwise by Engineer.

12. It is the Contractor's responsibility to verify the location of all existing utilities with appropriate agencies.

13. Exist. Palo Alto sewer main to be "pot holed" (exp) prior to start of work.

14. Where pipe cover is less than 3'0", provide concrete encasement. See Detail, this sheet.

15. Get C. City Easements. Letting to be obtained at Town Hall, at no cost.

JOHN W. RILEY • CIVIL ENGINEER • P. O. BOX 111 • LOS ALTOS 94022 • 948-0000

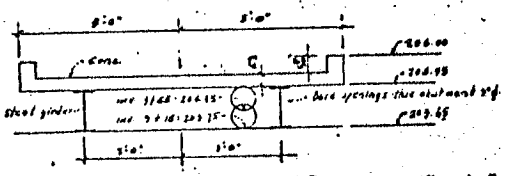

BRIDGE CROSSING SCALE: 1" = 2'0"
SECTION 3+18
3+48

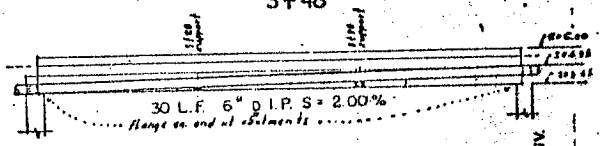

PROFILE: SCALE: 1" = 4'0"

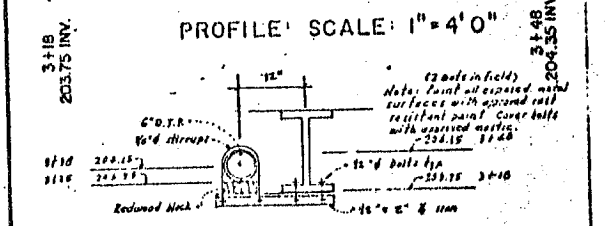

TYP. SUPPORT STA. 3+28
3+38

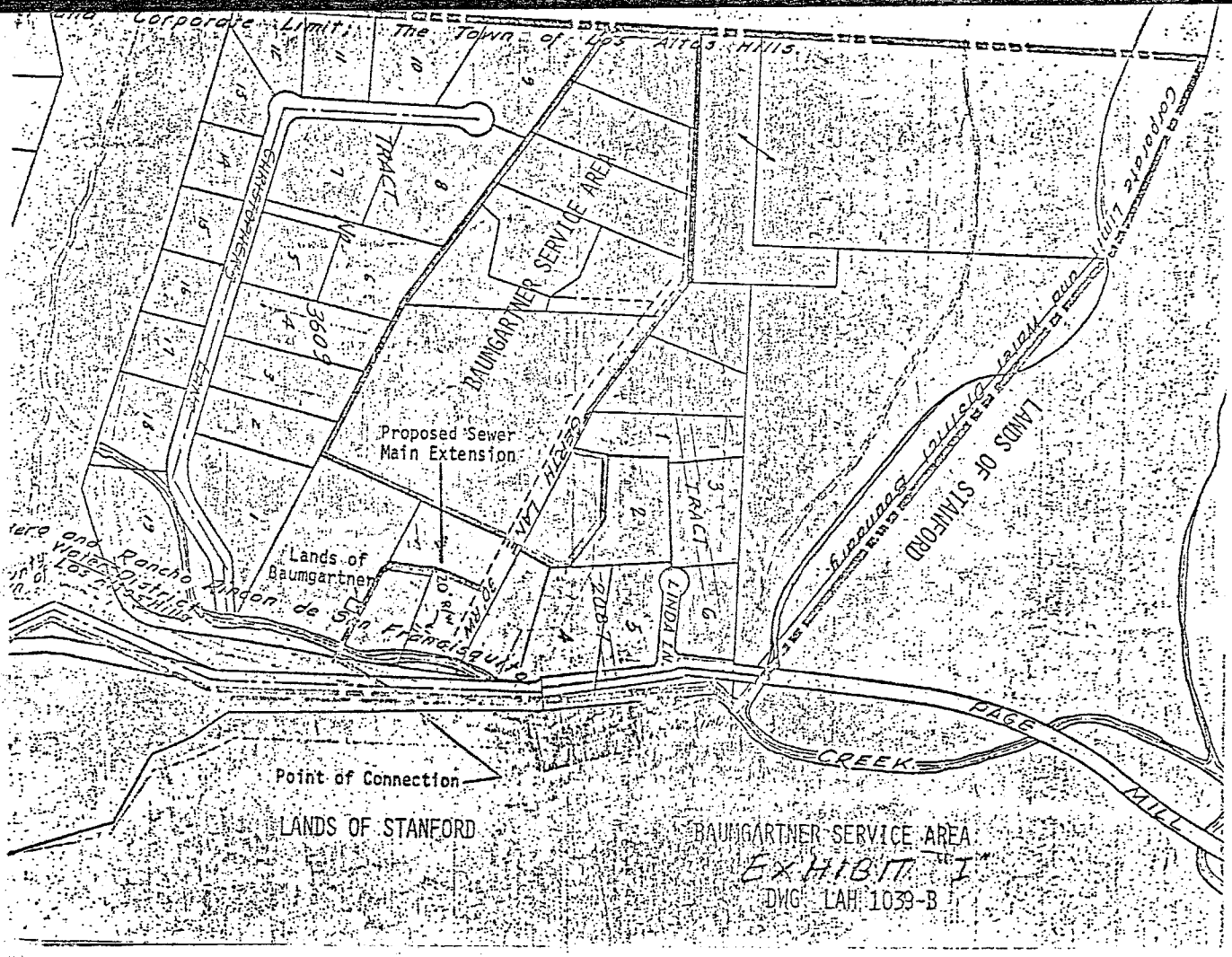
The Town of Los Altos Hills
Corporate Limit
BAUMGARTNER SERVICE AREA
TRACT
3609
Proposed Sewer Main Extension
Lands of Baumgartner
LINDA
LANDS OF STANFORD
PAGE MILL CREEK
Point of Connection
LANDS OF STANFORD
BAUMGARTNER SERVICE AREA
EXHIBIT "I"
DWG. LAH 1039-B

C2876

UTILITIES DEPARTMENT

AMENDMENT NO. 6 TO AGREEMENT FOR

SEWAGE TRANSPORTATION, TREATMENT AND DISPOSAL

TOWN OF LOS ALTOS HILLS

THIS AMENDMENT to Agreement No. 2876, made and entered into by and between the CITY OF PALO ALTO, a municipal corporation, hereinafter called "Palo Alto" and the CITY OF THE TOWN OF LOS ALTOS HILLS, a municipal corporation hereinafter called "Los Altos Hills".

W I T N E S S E T H:

WHEREAS, Palo Alto and Los Altos Hills entered into a joint use agreement on March 18, 1968, covering the transportation, treatment and disposal by Palo Alto of sewage emanating within a portion of the territorial limits of Los Altos Hills; and,

WHEREAS, Palo Alto and Los Altos Hills wish to supplement this Agreement to authorize connection of and service of the Lands of Robert Foulk and Douglas Chan and to authorize connection to the Palo Alto Sewer line approximately One Hundred Twenty-Five (125) feet southeasterly of Moon Lane and construction of a main in said location,

NOW, THEREFORE, in consideration of their mutual covenants the parties hereto agree as follows:

1. SCOPE OF AMENDMENT. Contract No. 2876, dated the 18th of March, 1968, between the parties hereto is hereby amended as follows:

A. Los Altos Hills is hereby authorized to connect to Palo Alto's trunk sewer line at the point indicated on Los Altos Hills Drawing Number LAH of Exhibit "J", which Exhibit is attached hereto and incorporated herein by reference, for the purpose of serving

the Lands of Robert Foulk and Douglas Chan. Said Exhibit "J" amends Exhibit "A" of Agreement No. 2876, above referenced to.

B. Los Altos Hills is hereby authorized to connect to the Palo Alto Sewer in said location to serve the property shown as the Foulk and Chan property on Los Altos Hills Drawing Number LAH of Exhibit "J", and other such properties within the Town of Los Altos Hills shown as the adjacent service area on Drawing Number LAH of Exhibit "J". Any lines constructed shall be the property of Los Altos Hills, and an encroachment permit therefor, pursuant to Chapter 12.12 of the Palo Alto Municipal Code, shall be obtained by Los Altos Hills. All costs of construction shall be paid by Los Altos Hills or the developer of property served thereby.

Except as herein modified, all other provisions of said Agreement No. 2876 shall remain in full force and effect.

IN WITNESS WHEREOF, the parties hereto have caused this Amendment No. 6 to Agreement For Sewage Transportation, Treatment and Disposal to be executed as follows:

By PALO ALTO this 5th day of AUGUST, 1985;
and
By Los Altos Hills this 4th day of December, 1985.

CITY OF PALO ALTO

By _____
Mayor

ATTEST:
_____
City Clerk

APPROVED AS TO FORM:
_____
City Attorney

APPROVED:
_____
City Manager, Acting

APPROVED:
_____

APPROVED AS TO CONTENT:
_____

CITY OF THE TOWN OF LOS ALTOS HILLS

ATTEST:

By _____
Mayor

_____
City Clerk

APPROVED AS TO FORM:

_____
City Attorney

FILE COPY

AMENDMENT NO. 7 TO AGREEMENT FOR
SEWAGE TRANSPORTATION, TREATMENT AND DISPOSAL
TOWN OF LOS ALTOS HILLS

This Amendment No. 7 to Agreement No. 2876 is made and entered into by and between the CITY OF PALO ALTO, a municipal corporation, ("Palo Alto") and the TOWN OF LOS ALTOS HILLS, a municipal corporation, ("Los Altos Hills").

WITNESSETH:

WHEREAS, Palo Alto and Los Altos Hills entered into a Joint Use Agreement on March 18, 1968, covering the transportation, treatment and disposal by Palo Alto of sewage emanating within a portion of the territorial limits of Los Altos Hills; and

WHEREAS, Palo Alto and Los Altos Hills wish to supplement this Agreement to authorize connection of and service of the Lands of Shideler at 27994 Via Ventana Way in Los Altos Hills and to authorize connection to the Palo Alto Sewer line at the most westerly sanitary sewer manhole located on the property at 28138 Storyhill Lane in Los Altos Hills and construction of a main in said location.

NOW, THEREFORE, in consideration of their mutual covenants, the parties hereto agree as follows:

1. SCOPE OF AMENDMENT. Pursuant to Section 1 of Agreement No. 2876 dated March 18, 1968, the Agreement between the parties hereto is hereby amended as follows:

a. Los Altos Hills is hereby authorized to connect to Palo Alto's trunk sewer line at the point indicated on Exhibit K, which Exhibit is attached hereto and incorporated herein by this reference, for the purpose of serving the Lands of Shideler.

b. Los Altos Hills is hereby authorized to connect to the Palo Alto Sewer in said location to serve the properties shown

as the Shideler property on Exhibit K and other such properties within Los Altos Hills shown as the adjacent service area on Exhibit K. Any lines constructed shall be the property of Los Altos Hills, and an encroachment permit therefor, pursuant to Chapter 12.12 of the Palo Alto Municipal Code, shall be obtained by Los Altos Hills. All costs of construction shall be paid by Los Altos Hills or the developers of properties served thereby.

2. Except as herein modified, all other provisions of said Agreement No. 2876 shall remain in full force and effect.

IN WITNESS WHEREOF, the parties hereto have caused this Amendment No. 7 to Agreement for Sewage Transportation, Treatment and Disposal to be executed as follows:

By Palo Alto this 3rd day of February, 1997; and

By Los Altos Hills this 15th day of January, 1997.

CITY OF PALO ALTO

APPROVED AS TO FORM:

By: _____
Mayor

_____
City Attorney

ATTEST:

_____
City Clerk

APPROVED AS TO CONTENT:

_____

APPROVED:

_____
City Manager

TOWN OF LOS ALTOS HILLS

APPROVED AS TO FORM:

By: _____
Mayor

_____
City Attorney

APPROVED AS TO CONTENT:

Jeff Peterson

City Engineer

ATTEST:

Patricia Dunn

City Clerk

Appendix B – Document 3
West Bay Agreement maintenance contract and 2015 amendment

TOWN OF LOS ALTOS HILLS
Staff Report to the City Council

June 19, 2014

SUBJECT: APPROVAL OF OPERATION AND MAINTENANCE SERVICE AGREEMENT FOR SANITARY SEWER SYSTEM, OVERFLOW EMERGENCY RESPONSE AND ASSET MANAGEMENT SERVICES

FROM: Richard Chiu, City Engineer/Public Works Director R. Chiu

APPROVED: Carl Cahill, City Manager C.C.

RECOMMENDATION: That the City Council:

Adopts the attached resolution authorizing the City Manager to execute an agreement with **West Bay Sanitary District** for providing operation and maintenance services for sanitary sewer systems and overflow emergency response services.

BACKGROUND

The Town owns and operates the sanitary sewer collection system consisting of approximately 296,070 feet (±56 miles) of pipes. Pipe diameters range from 4 to 12 inches, with approximately 77% of the system being vitrified clay pipe and 74% of the system being 6 inches in diameter. There are approximately 1,700 manholes and cleanouts including two lift stations at O'Keefe Road and Purissima Road. The sewer mains run under the roadway, sewer easements in the private properties, and Town's open space. The collected sewage is conveyed to the Palo Alto Regional Water Quality Control Plant through the collection systems of the City of Palo Alto and the City of Los Altos.

The Town is responsible for maintaining sewer mains but the maintenance of sewer lateral between building and the main shall be private property owner's responsibility.

DISCUSSION

For the past few years, the sanitary sewer system was maintained by Veolia Water West Operating Services, Inc. (Veolia). The Town and Veolia has agreed to terminate the agreement as of April 30, 2014. In an effort to obtain better service and improve the scope of work at a competitive price, a Request for Proposal (RFP) was released in late April of 2014 to seek a qualified contractor to perform the following scope of work:

- Provide proactive and preventive sewer main maintenance to reduce and eliminate stoppages and sanitary sewer overflows (SSOs).
- Perform regular maintenance work to include thorough cleaning to remove roots, debris, fats, oils, and grease.
- Maintain two Town owned sewer lift stations.
- Respond to emergency SSOs within Town sewer system

- Perform CCTV work with PACP coding
- Maintenance of CMMS Database and GIS sewer mapping
- Capable of managing the entire sewer collection system with strategic plans

Two (2) proposals were received on May 27, 2014. The proposal evaluation was conducted based on proposal price, contractor qualifications, relevant experience with public agencies or sanitary districts, and result of reference checks.

Based on discussions with references for Bino Construction/Murgreen Environmental, it appears that most of their work is for video assessment projects with not much in overall collection system/pump station maintenance and operations experience. West Bay Sanitary District does maintain and operate their own collection system and deals with many of the same issues that Los Altos Hills have. References for West Bay Sanitary District indicate that they have competent and well qualified staff.

After reviewing and comparing the proposals, West Bay Sanitary District's proposal stands out by its experience, quality of its staff, and management ability even though they are not the lowest in proposal price. Based on the evaluation, staff recommends awarding the contract to West Bay Sanitary District. This contract agreement has a not-to-exceed amount of $300,000.00 for preventive maintenance service, 24/7 emergency and call-out services and asset management services.

West Bay Sanitary District also presented additional services that are outside of the requested services outlined in our proposal, such as the ability to perform localized trenchless repair of the sewer line. Those services are available for consideration if the Town wishes to pursue them in the future.

FISCAL IMPACT:

Funds are included in the Proposed Fiscal Year 2014-15 Sewer Operating Fund Operating and Maintenance Account (015-4800-6140) to cover the cost of this contract.

ATTACHMENTS:
1. Resolution
2. Proposal Price Summary
3. Proposed agreement with West Bay Sanitary District

Attachment 1

RESOLUTION NO _____

A RESOLUTION OF THE CITY COUNCIL OF THE TOWN OF LOS ALTOS HILLS APPROVING AND AUTHORIZING EXECUTION OF AN AGREEMENT BETWEEN THE TOWN OF LOS ALTOS HILLS AND WEST BAY SANITARY DISTRICT FOR PROVIDING OPERATION AND MAINTENANCE SERVICE FOR SANITARY SEWER SYSTEM, OVERFLOW EMERGENCY RESPONSE AND ASSET MANAGEMENT SERVICES

WHEREAS, the City Council of the Town of Los Altos Hills has read and considered that certain Agreement ("Agreement") between the Town and West Bay Sanitary District;

NOW, THEREFORE, the City Council of the Town of Los Altos Hills does RESOLVE as follows:

Section 1. Public interest and convenience require the Town of Los Altos Hills to enter the Agreement with a not-to-exceed amount of $300,000.00 for preventive maintenance, emergency call-out, and asset management services.

Section 2. The Town of Los Altos Hills hereby approves the Agreement and the City Manager is hereby authorized on behalf of the Town to execute the Agreement between the Town of Los Altos Hills and West Bay Sanitary District.

PASSED AND ADOPTED this _____day of_____2014.

By: _____
Mayor

ATTEST:

_____
City Clerk

ATTACHMENT 2 –

PROPOSAL PRICE SUMMARY

Contractor Name	Proposal price
West Bay Sanitary District	$ 296,048.00
Bino Construction/Murgreen Environmental Company	$285,667.00

MAINTENANCE SERVICES AGREEMENT BETWEEN
THE TOWN OF LOS ALTOS HILLS AND
WEST BAY SANITARY DISTRICT
FOR OPERATION AND MAINTENANCE OF LOS ALTOS HILLS SANITARY SEWER SYSTEM

THIS AGREEMENT for consulting services is made by and between the Town of Los Altos Hills ("Town") and _____ ("Contractor") (together sometimes referred to as the "Parties") as of _____ (the "Effective Date").

Section 1. **SERVICES**. Subject to the terms and conditions set forth in this Agreement, Contractor shall provide to Town the services described in the Scope of Work attached as **Exhibit A,** attached hereto and incorporated herein, at the time and place and in the manner specified therein. In the event of a conflict in or inconsistency between the terms of this Agreement and Exhibit A, the Agreement shall prevail.

1.1 **Term of Services.** The term of this Agreement shall begin on the Effective Date and shall end on _____, the date of completion specified in **Exhibit A**, and Contractor shall complete the work described in **Exhibit A** prior to that date, unless the term of the Agreement is otherwise terminated or extended, as provided for in Section 8. The time provided to Contractor to complete the services required by this Agreement shall not affect the Town's right to terminate the Agreement, as provided for in Section 8.

1.2 **Standard of Performance.** Contractor shall perform all services required pursuant to this Agreement in the manner and according to the standards observed by a competent practitioner of the profession in which Contractor is engaged in the geographical area in which Contractor practices its profession.

1.3 **Assignment of Personnel.** Contractor shall assign only competent personnel to perform services pursuant to this Agreement. In the event that Town, in its sole discretion, at any time during the term of this Agreement, desires the reassignment of any such persons, Contractor shall, immediately upon receiving notice from Town of such desire of Town, reassign such person or persons.

1.4 **Time.** Contractor shall devote such time to the performance of services pursuant to this Agreement as may be reasonably necessary to meet the standard of performance provided in Section 1.1 above and to satisfy Contractor's obligations hereunder.

Section 2. **COMPENSATION.** Town hereby agrees to pay Contractor a sum not to exceed _____, notwithstanding any contrary indications that may be contained in Contractor's proposal, for services to be performed and reimbursable costs incurred under this Agreement. In the event of a conflict between this Agreement and Contractor's proposal, attached as **Exhibit A,** regarding the amount of compensation, the Agreement shall prevail. Town shall pay Contractor for services rendered pursuant to this Agreement at the time and in the manner set forth herein. The payments specified below

shall be the only payments from Town to Contractor for services rendered pursuant to this Agreement. Contractor shall submit all invoices to Town in the manner specified herein. Except as specifically authorized by Town, Contractor shall not bill Town for duplicate services performed by more than one person.

Contractor and Town acknowledge and agree that compensation paid by Town to Contractor under this Agreement is based upon Contractor's estimated costs of providing the services required hereunder, including salaries and benefits of employees and subcontractors of Contractor. Consequently, the parties further agree that compensation hereunder is intended to include the costs of contributions to any pensions and/or annuities to which Contractor and its employees, agents, and subcontractors may be eligible. Town therefore has no responsibility for such contributions beyond compensation required under this Agreement.

2.1 **Invoices.** Contractor shall submit invoices, not more often than once a month during the term of this Agreement, based on the cost for services performed and reimbursable costs incurred prior to the invoice date. Invoices shall contain the following information:

- Serial identifications of progress bills; i.e., Progress Bill No. 1 for the first invoice, etc.;
- The beginning and ending dates of the billing period;
- A Task Summary containing the original contract amount, the amount of prior billings, the total due this period, the balance available under the Agreement, and the percentage of completion;
- At Town's option, for each work item in each task, a copy of the applicable time entries or time sheets shall be submitted showing the name of the person doing the work, the hours spent by each person, a brief description of the work, and each reimbursable expense;
- The total number of hours of work performed under the Agreement by Contractor and each employee, agent, and subcontractor of Contractor performing services hereunder;
- The Contractor's signature.

2.2 **Monthly Payment.** Town shall make monthly payments, based on invoices received, for services satisfactorily performed, and for authorized reimbursable costs incurred. Town shall have 30 days from the receipt of an invoice that complies with all of the requirements above to pay Contractor.

2.3 **Final Payment.** Town shall pay the last 10% of the total sum due pursuant to this Agreement within sixty (60) days after completion of the services and submittal to Town of a final invoice, if all services required have been satisfactorily performed.

2.4 **Total Payment.** Town shall pay for the services to be rendered by Contractor pursuant to

this Agreement. Town shall not pay any additional sum for any expense or cost whatsoever incurred by Contractor in rendering services pursuant to this Agreement. Town shall make no payment for any extra, further, or additional service pursuant to this Agreement.

In no event shall Contractor submit any invoice for an amount in excess of the maximum amount of compensation provided above either for a task or for the entire Agreement, unless the Agreement is modified prior to the submission of such an invoice by a properly executed change order or amendment.

2.7 **Payment of Taxes.** Contractor is solely responsible for the payment of employment taxes incurred under this Agreement and any similar federal or state taxes.

2.8 **Payment upon Termination.** In the event that the Town or Contractor terminates this Agreement pursuant to Section 8, the Town shall compensate the Contractor for all outstanding costs and reimbursable expenses incurred for work satisfactorily completed as of the date of written notice of termination. Contractor shall maintain adequate logs and timesheets in order to verify costs incurred to that date.

2.9 **Authorization to Perform Services.** The Contractor is not authorized to perform any services or incur any costs whatsoever under the terms of this Agreement until receipt of authorization from the Contract Administrator.

Section 3. **FACILITIES AND EQUIPMENT.** Except as set forth herein, Contractor shall, at its sole cost and expense, provide all facilities and equipment that may be necessary to perform the services required by this Agreement.

Section 4. **INSURANCE REQUIREMENTS.** Before beginning any work under this Agreement, Contractor, at its own cost and expense, unless otherwise specified below, shall procure the types and amounts of insurance listed below against claims for injuries to persons or damages to property that may arise from or in connection with the performance of the work hereunder by the Contractor and its agents, representatives, employees, and subcontractors. Consistent with the following provisions, Contractor shall provide Certificates of Insurance, attached hereto and incorporated herein as **Exhibit B**, indicating that Contractor has obtained or currently maintains insurance that meets the requirements of this section and under forms of insurance satisfactory, in all respects, to the Town. Contractor shall maintain the insurance policies required by this section throughout the term of this Agreement. The cost of such insurance shall be included in the Contractor's bid. Contractor shall not allow any subcontractor to commence work on any subcontract until Contractor has obtained all insurance required herein for the subcontractor(s) and provided evidence thereof to Town. Verification of the required insurance shall be submitted and made part of this Agreement prior to execution.

4.1 **Workers' Compensation.** Contractor shall, at its sole cost and expense, maintain Statutory Workers' Compensation Insurance and Employer's Liability Insurance for any and all persons employed directly or indirectly by Contractor. The Statutory Workers'

Compensation Insurance and Employer's Liability Insurance shall be provided with limits of not less than ONE MILLION DOLLARS ($1,000,000.00) per accident. In the alternative, Contractor may rely on a self-insurance program to meet those requirements, but only if the program of self-insurance complies fully with the provisions of the California Labor Code. Determination of whether a self-insurance program meets the standards of the Labor Code shall be solely in the discretion of the Contract Administrator. The insurer, if insurance is provided, or the Contractor, if a program of self-insurance is provided, shall waive all rights of subrogation against the Town and its officers, officials, employees, and volunteers for loss arising from work performed under this Agreement.

4.2 Commercial General and Automobile Liability Insurance.

4.2.1 General requirements. Contractor, at its own cost and expense, shall maintain commercial general and automobile liability insurance for the term of this Agreement in an amount not less than TWO MILLION DOLLARS ($2,000,000.00) per occurrence, combined single limit coverage for risks associated with the work contemplated by this Agreement. If a Commercial General Liability Insurance or an Automobile Liability form or other form with a general aggregate limit is used, either the general aggregate limit shall apply separately to the work to be performed under this Agreement or the general aggregate limit shall be at least twice the required occurrence limit. Such coverage shall include but shall not be limited to, protection against claims arising from bodily and personal injury, including death resulting there from, and damage to property resulting from activities contemplated under this Agreement, including the use of owned and non-owned automobiles.

4.2.2 Minimum scope of coverage. Commercial general coverage shall be at least as broad as Insurance Services Office Commercial General Liability occurrence form CG 0001 or GL 0002 (most recent editions) covering comprehensive General Liability and Insurance Services Office form number GL 0404 covering Broad Form Comprehensive General Liability. Automobile coverage shall be at least as broad as Insurance Services Office Automobile Liability form CA 0001 (ed. 12/90) Code 8 and 9. No endorsement shall be attached limiting the coverage.

4.2.3 Additional requirements. Each of the following shall be included in the insurance coverage or added as a certified endorsement to the policy:

a. The insurance shall cover on an occurrence or an accident basis, and not on a claims-made basis.

b. Any failure of Contractor to comply with reporting provisions of the policy shall not affect coverage provided to Town and its officers, employees, agents, and volunteers.

4.3 Professional Liability Insurance.

4.3.1 General requirements. Contractor, at its own cost and expense, shall maintain for the period covered by this Agreement professional liability insurance for licensed professionals performing work pursuant to this Agreement in an amount not less than ONE MILLION DOLLARS ($1,000,000) covering the licensed professionals' errors and omissions. Any deductible or self-insured retention shall not exceed $150,000 per claim.

4.3.2 Claims-made limitations. The following provisions shall apply if the professional liability coverage is written on a claims-made form:

a. The retroactive date of the policy must be shown and must be before the date of the Agreement.

b. Insurance must be maintained and evidence of insurance must be provided for at least five years after completion of the Agreement or the work, so long as commercially available at reasonable rates.

c. If coverage is canceled or not renewed and it is not replaced with another claims-made policy form with a retroactive date that precedes the date of this Agreement, Contractor must provide extended reporting coverage for a minimum of five years after completion of the Agreement or the work. The Town shall have the right to exercise, at the Contractor's sole cost and expense, any extended reporting provisions of the policy, if the Contractor cancels or does not renew the coverage.

d. A copy of the claim reporting requirements must be submitted to the Town prior to the commencement of any work under this Agreement.

4.4 All Policies Requirements.

4.4.1 Acceptability of insurers. All insurance required by this section is to be placed with insurers with a Bests' rating of no less than A:VII.

4.4.2 Verification of coverage. Prior to beginning any work under this Agreement, Contractor shall furnish Town with complete certified copies of all policies, including complete certified copies of all endorsements. All copies of policies and certified endorsements shall show the signature of a person authorized by that insurer to bind coverage on its behalf.

4.4.3 Notice of Reduction in or Cancellation of Coverage. A certified endorsement shall be attached to all insurance obtained pursuant to this Agreement stating that coverage shall not be suspended, voided, canceled by either party, or reduced in

coverage or in limits, except after thirty (30) days' prior written notice by certified mail, return receipt requested, has been given to the Town. In the event that any coverage required by this section is reduced, limited, cancelled, or materially affected in any other manner, Contractor shall provide written notice to Town at Contractor's earliest possible opportunity and in no case later than ten (10) working days after Contractor is notified of the change in coverage.

4.4.4 **Additional insured; primary insurance.** Town and its officers, employees, agents, and volunteers shall be covered as additional insureds with respect to each of the following: liability arising out of activities performed by or on behalf of Contractor, including the insured's general supervision of Contractor; products and completed operations of Contractor, as applicable; premises owned, occupied, or used by Contractor; and automobiles owned, leased, or used by the Contractor in the course of providing services pursuant to this Agreement. The coverage shall contain no special limitations on the scope of protection afforded to Town or its officers, employees, agents, or volunteers.

A certified endorsement must be attached to all policies stating that coverage is primary insurance with respect to the Town and its officers, officials, employees and volunteers, and that no insurance or self-insurance maintained by the Town shall be called upon to contribute to a loss under the coverage.

4.4.5 **Deductibles and Self-Insured Retentions.** Contractor shall disclose to and obtain the approval of Town for the self-insured retentions and deductibles before beginning any of the services or work called for by any term of this Agreement.

During the period covered by this Agreement, only upon the prior express written authorization of Contract Administrator, Contractor may increase such deductibles or self-insured retentions with respect to Town, its officers, employees, agents, and volunteers. The Contract Administrator may condition approval of an increase in deductible or self-insured retention levels with a requirement that Contractor procure a bond, guaranteeing payment of losses and related investigations, claim administration, and defense expenses that is satisfactory in all respects to each of them.

4.4.6 **Subcontractors.** Contractor shall include all subcontractors as insureds under its policies or shall furnish separate certificates and certified endorsements for each subcontractor. All coverages for subcontractors shall be subject to all of the requirements stated herein.

4.4.7 **Variation.** The Town may approve a variation in the foregoing insurance requirements, upon a determination that the coverage, scope, limits, and forms of such insurance are either not commercially available, or that the Town's interests are otherwise fully protected.

4.5 **Remedies.** In addition to any other remedies Town may have if Contractor fails to provide or maintain any insurance policies or policy endorsements to the extent and within the time herein required, Town may, at its sole option exercise any of the following remedies, which are alternatives to other remedies Town may have and are not the exclusive remedy for Contractor's breach:

- Obtain such insurance and deduct and retain the amount of the premiums for such insurance from any sums due under the Agreement;
- Order Contractor to stop work under this Agreement or withhold any payment that becomes due to Contractor hereunder, or both stop work and withhold any payment, until Contractor demonstrates compliance with the requirements hereof; and/or
- Terminate this Agreement.

Section 5. INDEMNIFICATION AND CONTRACTOR'S RESPONSIBILITIES. Contractor shall indemnify, defend with counsel selected by the Town, and hold harmless the Town and its officials, officers, employees, agents, and volunteers from and against any and all losses, liability, claims, suits, actions, damages, and causes of action arising out of any personal injury, bodily injury, loss of life, or damage to property, or any violation of any federal, state, or municipal law or ordinance, to the extent caused, in whole or in part, by the willful misconduct or negligent acts or omissions of Contractor or its employees, subcontractors, or agents, by acts for which they could be held strictly liable, or by the quality or character of their work. The foregoing obligation of Contractor shall not apply when (1) the injury, loss of life, damage to property, or violation of law arises wholly from the gross negligence or willful misconduct of the Town or its officers, employees, agents, or volunteers and (2) the actions of Contractor or its employees, subcontractor, or agents have contributed in no part to the injury, loss of life, damage to property, or violation of law. It is understood that the duty of Contractor to indemnify and hold harmless includes the duty to defend as set forth in Section 2778 of the California Civil Code. Acceptance by Town of insurance certificates and endorsements required under this Agreement does not relieve Contractor from liability under this indemnification and hold harmless clause. This indemnification and hold harmless clause shall apply to any damages or claims for damages whether or not such insurance policies shall have been determined to apply. By execution of this Agreement, Contractor acknowledges and agrees to the provisions of this Section and that it is a material element of consideration.

In the event that Contractor or any employee, agent, or subcontractor of Contractor providing services under this Agreement is determined by a court of competent jurisdiction or the California Public Employees Retirement System (PERS) to be eligible for enrollment in PERS as an employee of Town, Contractor shall indemnify, defend, and hold harmless Town for the payment of any employee and/or employer contributions for PERS benefits on behalf of Contractor or its employees, agents, or subcontractors, as well as for the payment of any penalties and interest on such contributions, which would otherwise be the responsibility of Town.

Section 6. STATUS OF CONTRACTOR.

6.1 **Independent Contractor.** At all times during the term of this Agreement, Contractor shall be an independent contractor and shall not be an employee of Town. Town shall have the right to control Contractor only insofar as the results of Contractor's services rendered pursuant to this Agreement and assignment of personnel pursuant to Subparagraph 1.3; however, otherwise Town shall not have the right to control the means by which Contractor accomplishes services rendered pursuant to this Agreement. Notwithstanding any other City, state, or federal policy, rule, regulation, law, or ordinance to the contrary, Contractor and any of its employees, agents, and subcontractors providing services under this Agreement shall not qualify for or become entitled to, and hereby agree to waive any and all claims to, any compensation, benefit, or any incident of employment by Town, including but not limited to eligibility to enroll in the California Public Employees Retirement System (PERS) as an employee of Town and entitlement to any contribution to be paid by Town for employer contributions and/or employee contributions for PERS benefits.

6.2 **Contractor No Agent.** Except as Town may specify in writing, Contractor shall have no authority, express or implied, to act on behalf of Town in any capacity whatsoever as an agent. Contractor shall have no authority, express or implied, pursuant to this Agreement to bind Town to any obligation whatsoever.

Section 7. LEGAL REQUIREMENTS.

7.1 **Governing Law.** The laws of the State of California shall govern this Agreement.

7.2 **Compliance with Applicable Laws.** Contractor and any subcontractors shall comply with all laws applicable to the performance of the work hereunder.

7.3 **Other Governmental Regulations.** To the extent that this Agreement may be funded by fiscal assistance from another governmental entity, Contractor and any subcontractors shall comply with all applicable rules and regulations to which Town is bound by the terms of such fiscal assistance program.

7.4 **Licenses and Permits.** Contractor represents and warrants to Town that Contractor and its employees, agents, and any subcontractors have all licenses, permits, qualifications, and approvals of what-so-ever nature that are legally required to practice their respective professions. Contractor represents and warrants to Town that Contractor and its employees, agents, any subcontractors shall, at their sole cost and expense, keep in effect at all times during the term of this Agreement any licenses, permits, and approvals that are legally required to practice their respective professions. In addition to the foregoing, Contractor and any subcontractors shall obtain and maintain during the term of this Agreement valid Business Licenses from Town.

7.5 **Nondiscrimination and Equal Opportunity.** Contractor shall not discriminate, on the

basis of a person's race, religion, color, national origin, age, physical or mental handicap or disability, medical condition, marital status, sex, or sexual orientation, against any employee, applicant for employment, subcontractor, bidder for a subcontract, or participant in, recipient of, or applicant for any services or programs provided by Contractor under this Agreement. Contractor shall comply with all applicable federal, state, and local laws, policies, rules, and requirements related to equal opportunity and nondiscrimination in employment, contracting, and the provision of any services that are the subject of this Agreement, including but not limited to the satisfaction of any positive obligations required of Contractor thereby.

Contractor shall include the provisions of this Subsection in any subcontract approved by the Contract Administrator or this Agreement.

Section 8. TERMINATION AND MODIFICATION.

8.1 **Termination.** Town may cancel this Agreement at any time and without cause upon written notification to Contractor.

Contractor may cancel this Agreement upon ninety (90) days written notice to Town and shall include in such notice the reasons for cancellation.

In the event of termination, Contractor shall be entitled to compensation for services performed to the effective date of termination; Town, however, may condition payment of such compensation upon Contractor delivering to Town any or all documents, photographs, computer software, video and audio tapes, and other materials provided to Contractor or prepared by or for Contractor or the Town in connection with this Agreement.

8.2 **Extension.** Town reserves the right not to extend this Agreement. However, upon the mutual agreement of Town and Contractor, Town may extend the end date of this Agreement beyond that provided for in Subsection 1.1. Any such extension shall require a written amendment to this Agreement, as provided for herein. Contractor's compensation during such extension shall be determined by mutual agreement of Town and Contractor at the time of extension.

8.3 **Amendments.** The parties may amend this Agreement only by a writing signed by all the parties.

8.4 **Assignment and Subcontracting.** Town and Contractor recognize and agree that this Agreement contemplates personal performance by Contractor and is based upon a determination of Contractor's unique personal competence, experience, and specialized personal knowledge. Moreover, a substantial inducement to Town for entering into this Agreement was and is the professional reputation and competence of Contractor. Contractor may not assign this Agreement or any interest therein without the prior written

approval of the Contract Administrator. Contractor shall not subcontract any portion of the performance contemplated and provided for herein, other than to the subcontractors noted in the proposal, without prior written approval of the Contract Administrator.

8.5 **Survival.** All obligations arising prior to the termination of this Agreement and all provisions of this Agreement allocating liability between Town and Contractor shall survive the termination of this Agreement.

8.6 **Options upon Breach by Contractor.** If Contractor materially breaches any of the terms of this Agreement, Town's remedies shall include, but not be limited to, the following:

8.6.1 Immediately terminate the Agreement;

8.6.2 Retain the plans, specifications, drawings, reports, design documents, and any other work product prepared by Contractor pursuant to this Agreement;

8.6.3 Retain a different Contractor to complete the work described in **Exhibit A** not finished by Contractor; and/or

8.6.4 Charge Contractor the difference between the cost to complete the work described in **Exhibit A** that is unfinished at the time of breach and the amount that Town would have paid Contractor pursuant to Section 2 if Contractor had completed the work.

Section 9. KEEPING AND STATUS OF RECORDS.

9.1 **Records Created as Part of Contractor's Performance.** All reports, data, maps, models, charts, studies, surveys, photographs, memoranda, plans, studies, specifications, records, files, or any other documents or materials, in electronic or any other form, that Contractor prepares or obtains pursuant to this Agreement and that relate to the matters covered hereunder shall be the property of the Town. Contractor hereby agrees to deliver those documents to the Town upon termination of the Agreement. It is understood and agreed that the documents and other materials, including but not limited to those described above, prepared pursuant to this Agreement are prepared specifically for the Town and are not necessarily suitable for any future or other use. Town and Contractor agree that, until final approval by Town, all data, plans, specifications, reports and other documents are confidential and will not be released to third parties without prior written consent of both parties unless required by law.

9.2 **Contractor's Books and Records.** Contractor shall maintain any and all ledgers, books of account, invoices, vouchers, canceled checks, and other records or documents evidencing or relating to charges for services or expenditures and disbursements charged to the Town under this Agreement for a minimum of three (3) years, or for any longer period required by law, from the date of final payment to the Contractor to this Agreement.

9.3 **Inspection and Audit of Records.** Any records or documents that Section 9.2 of this Agreement requires Contractor to maintain shall be made available for inspection, audit, and/or copying at any time during regular business hours, upon oral or written request of the Town. Under California Government Code Section 8546.7, if the amount of public funds expended under this Agreement exceeds TEN THOUSAND DOLLARS ($10,000.00), the Agreement shall be subject to the examination and audit of the State Auditor, at the request of Town or as part of any audit of the Town, for a period of three (3) years after final payment under the Agreement.

9.4 **Records Submitted in Response to an Invitation to Bid or Request for Proposals**. All responses to a Request for Proposals (RFP) or invitation to bid issued by the Town become the exclusive property of the Town. At such time as the Town selects a bid, all proposals received become a matter of public record, and shall be regarded as public records, with the exception of those elements in each proposal that are defined by Contractor and plainly marked as "Business Secret" or Trade Secret." Any proposal that contains language purporting to render all or significant portions of the proposal "Confidential," "Trade Secret," or "Proprietary," shall be regarded as non-responsive.

The Town shall not be liable or in any way responsible for the disclosure of any such proposal or portions thereof, if Contractor has not plainly marked it as a "Trade Secret" or "Business Secret" or if disclosure is required under the Public Records Act.

Although the California Public Records Act recognizes that certain confidential trade secret information may be protected from disclosure, the Town may not be in a position to establish that the information that a prospective bidder submits is a trade secret. If a request is made for information marked "Trade Secret" or "Business Secret," and the requester takes legal action seeking release of the materials it believes does not constitute trade secret information, by submitting a proposal, Contractor agrees to indemnify, defend and hold harmless the Town, its agents and employees, from any judgment, fines, penalties, and award of attorneys fees awarded against the Town in favor of the party requesting the information, and any and all costs connected with that defense. This obligation to indemnify survives the Town's award of the contract. In submitting a proposal, Contractor agrees that this indemnification survives as long as the trade secret information is in the Town's possession, which includes a minimum retention period for such documents.

Section 10 MISCELLANEOUS PROVISIONS.

10.1 **Attorneys' Fees.** If a party to this Agreement brings any action, including an action for declaratory relief, to enforce or interpret the provision of this Agreement, the prevailing party shall be entitled to reasonable attorneys' fees in addition to any other relief to which that party may be entitled. The court may set such fees in the same action or in a separate action brought for that purpose.

10.2 **Venue.** In the event that either party brings any action against the other under this Agreement, the parties agree that trial of such action shall be vested exclusively in the state courts of California in the County of Santa Clara or in the United States District Court for the Northern District of California.

10.3 **Severability.** If a court of competent jurisdiction finds or rules that any provision of this Agreement is invalid, void, or unenforceable, the provisions of this Agreement not so adjudged shall remain in full force and effect. The invalidity in whole or in part of any provision of this Agreement shall not void or affect the validity of any other provision of this Agreement.

10.4 **No Implied Waiver of Breach.** The waiver of any breach of a specific provision of this Agreement does not constitute a waiver of any other breach of that term or any other term of this Agreement.

10.5 **Successors and Assigns.** The provisions of this Agreement shall inure to the benefit of and shall apply to and bind the successors and assigns of the parties.

10.6 **Use of Recycled Products.** Contractor shall prepare and submit all reports, written studies and other printed material on recycled paper to the extent it is available at equal or less cost than virgin paper.

10.7 **Conflict of Interest.** Contractor may serve other clients, but none whose activities within the corporate limits of Town or whose business, regardless of location, would place Contractor in a "conflict of interest," as that term is defined in the Political Reform Act, codified at California Government Code Section 81000 *et seq.*

Contractor shall not employ any Town official in the work performed pursuant to this Agreement. No officer or employee of Town shall have any financial interest in this Agreement that would violate California Government Code Sections 1090 *et seq.*

Contractor hereby warrants that it is not now, nor has it been in the previous twelve (12) months, an employee, agent, appointee, or official of the Town. If Contractor was an employee, agent, appointee, or official of the Town in the previous twelve months, Contractor warrants that it did not participate in any manner in the forming of this Agreement. Contractor understands that, if this Agreement is made in violation of Government Code §1090 *et.seq.*, the entire Agreement is void and Contractor will not be entitled to any compensation for services performed pursuant to this Agreement, including reimbursement of expenses, and Contractor will be required to reimburse the Town for any sums paid to the Contractor. Contractor understands that, in addition to the foregoing, it may be subject to criminal prosecution for a violation of Government Code § 1090 and, if applicable, will be disqualified from holding public office in the State of California.

10.8 **Solicitation.** Contractor agrees not to solicit business at any meeting, focus group, or

interview related to this Agreement, either orally or through any written materials.

10.9 **Contract Administration.** This Agreement shall be administered by the Town's Public Works Director ("Contract Administrator"). All correspondence shall be directed to or through the Contract Administrator or his or her designee.

10.10 **Notices.** Any written notice to Contractor shall be sent to:

_____
_____
_____
_____

Any written notice to Town shall be sent to:

Public Works Director, Town of Los Altos Hills
Richard Chiu Jr.
26379 Fremont Road
Los Altos Hills, CA 94022

10.11 **Integration.** This Agreement, including the scope of work attached hereto and incorporated herein as **Exhibit A**, represents the entire and integrated agreement between Town and Contractor and supersedes all prior negotiations, representations, or agreements, either written or oral.

10.12 **Counterparts.** This Agreement may be executed in multiple counterparts, each of which shall be an original and all of which together shall constitute one agreement.

The Parties have executed this Agreement as of the Effective Date.

TOWN OF LOS ALTOS HILLS

_____

Carl Cahill, City Manager

Contractor

_____

NAME:
TITLE:

Attest:

_____

City Clerk

Approved as to Form:

_____

City Attorney

207532_1

1526666.1

TOWN OF LOS ALTOS HILLS
26379 Fremont Road Los Altos Hills, CA 94022
Attention: Richard Chiu
Public Works Director

A. POLICY INFORMATION

1. Insurance Company:		Policy Number:
2. Policy Term: From:	To:	Endorsement Effective Date:
3. Named Insured:		
4. Address of Named Insured:		
5. Limit of Liability Any One Occurrence/Aggregate **$1,000,000$/3,000,000**		
6. Deductible or Self-Insured Retention (Nil unless otherwise specified):		
7. "Claims Made" coverage: Retroactive Date:		
Tails:		

B. POLICY AMENDMENTS

This endorsement is issued in consideration of the policy premium. Notwithstanding any inconsistent statement in the policy to which this endorsement is attached or any other endorsement attached thereto it is agreed as follows:

1. **INSURED:** The Town, its elected or appointed officials, employees, and volunteers are included as insured with regard to damages and defense of claims arising from: (a) activities performed by or on behalf of the Named Insured, (b) products and completed operations of the Named Insured, or (c) premises owned, leased or used by the Named Insured.

2. **CONTRIBUTION NOT REQUIRED:** As respects: (a) work performed by the Named Insured for or on behalf of the Town; or (b) products sold by the Named Insured to the Town, or (c) premises leased by the Named Insured from the Town, the insurance afforded by this policy shall be primary insurance as respects the Town, its elected or appointed officials, employees or volunteers; or stand in an unbroken chain of coverage excess of the Named Insured's scheduled underlying primary coverage. In either event, any other insurance maintained by the Town, its elected or appointed officials, employees or volunteers shall be excess of this insurance and shall not contribute with it.

3. **SCOPE OF COVERAGE:** The policy: (1) if primary, affords coverage at least as broad as Insurance Services Office form for Broad Form Commercial General Liability Insurance and Insurance Services Office form for Broad Form Commercial General Liability endorsement; or (2) if excess, affords coverage which is at least as broad as the Primary Insurance form referenced in the preceding Section (1).

4. **SEVERABILITY OF INTEREST:** The insurance afforded by this policy applies separately to each insured seeking coverage or against whom a claim is made or a suit is brought, except with respect to the Company's limit of liability.

5. **PROVISIONS REGARDING THE INSURED'S DUTIES AFTER ACCIDENT OR LOSS:** Any failure to comply with reporting provisions of the policy shall not affect coverage provided to the Town, its elected or appointed officials, employees or volunteers.

6. **CANCELLATION NOTICE:** The insurance afforded by this policy shall not be suspended, voided, canceled, reduced in coverage or in limits except after thirty (30) days prior written notice by Certified Mail Return Receipt Requested have been given to the Town. Such notice shall be addressed as shown in the heading of this endorsement.

C. SIGNATURE OF INSURER OR AUTHORIZED REPRESENTATIVE OF THE INSURER

I, _____(print/type name), warrant that I have authority to bind the below-listed insurance company and by my signature hereon do so bind this company.

Signature of _____

Authorized Representative
(original signature on endorsement furnished to the Town)

ORGANIZATION: _____ TITLE: _____

ADDRESS: _____ TELEPHONE:_____

AUTOMOBILE LIABILITY ENDORSEMENT
TOWN OF LOS ALTOS HILLS
26379 FREMONT ROAD, LOS ALTOS HILLS, CA 94022
Attention: Richard Chiu
Public Works Director

A. POLICY INFORMATION

1. Insurance Company:		Policy Number:
2. Policy Term: From:	To:	Endorsement Effective Date:
3. Named Insured:		
4. Address of Named Insured:		
5. Limit of Liability Any One Occurrence/Aggregate **$1,000,000.00**		
6. Deductible or Self-Insured Retention (Nil unless otherwise specified):		
7. "Claims Made" coverage: Retroactive Date:		
Tails:		

B. POLICY AMENDMENTS

This endorsement is issued in consideration of the policy premium. Notwithstanding any inconsistent statement in the policy to which this endorsement is attached or any other endorsement attached thereto it is agreed as follows:

1. **INSURED:** The Town, its elected or appointed officials, employees, and volunteers are included as insured with regard to damages and defense of claims arising from: (a) activities performed by or on behalf of the Named Insured, (b) products and completed operations of the Named Insured, or (c) premises owned, leased or used by the Named Insured.

2. **CONTRIBUTION NOT REQUIRED:** As respects: (a) work performed by the Named Insured for or on behalf of the Town; or (b) products sold by the Named Insured to the Town, or (c) premises leased by the Named Insured from the Town, the insurance afforded by this policy shall be primary insurance as respects the Town, its elected or appointed officials, employees or volunteers; or stand in an unbroken chain of coverage excess of the Named Insured's scheduled underlying primary coverage. In either event, any other insurance maintained by the Town, its elected or appointed officials, employees or volunteers shall be excess of this insurance and shall not contribute with it.

3. **SCOPE OF COVERAGE:** This policy affords coverage to the Named Insured which is at least as broad as Insurance Services Office form for Automobile Liability, Code 1 ("any auto").

4. **SEVERABILITY OF INTEREST:** The insurance afforded by this policy applies separately to each insured seeking coverage or against whom a claim is made or a suit is brought, except with respect to the Company's limit of liability.

5. **PROVISIONS REGARDING THE INSURED'S DUTIES AFTER ACCIDENT OR LOSS:** Any failure to comply with reporting provisions of the policy shall not affect coverage provided to the Town, its elected or appointed officials, employees or volunteers.

6. **CANCELLATION NOTICE:** The insurance afforded by this policy shall not be suspended, voided, canceled, reduced in coverage or in limits except after thirty (30) day prior written notice by Certified Mail Return Receipt Requested has been given to the Town. Such notice shall be addressed as shown in the heading of this endorsement.

C. SIGNATURE OF INSURER OR AUTHORIZED REPRESENTATIVE OF THE INSURER

I, _____(print/type name), warrant that I have authority to bind the below-listed insurance company and by my signature hereon do so bind this company.

Signature of _____

Authorized Representative
(original signature on endorsement furnished to the Town)

ORGANIZATION: _____ TITLE: _____

ADDRESS: _____ TELEPHONE: _____

WORKERS COMPENSATION/EMPLOYEES LIABILITY ENDORSEMENT
TOWN OF LOS ALTOS HILLS
26379 FREMONT ROAD, LOS ALTOS HILLS, CA 94022
Attention: Richard Chiu
Public Works Director

A. POLICY INFORMATION

1. Insurance Company:		Policy Number:
2. Policy Term: From:	To:	Endorsement Effective Date:
3. Named Insured:		
4. Employer's Liability Limits (coverage B) $1,000,000.00		

B. POLICY AMENDMENTS

This endorsement is issued in consideration of the policy premium. Notwithstanding any inconsistent statement in the policy to which this endorsement is attached or any other endorsement attached thereto it is agreed as follows:

1. **CANCELLATION NOTICE:** The insurance afforded to this policy shall not be suspended, voided, canceled, reduced in coverage or in limits except after thirty (30) days prior written notice by Certified Mail Return Receipt Requested have been given to the Town. Such notice shall be addressed as shown in the heading of this endorsement.

2. **WAIVER OF SUBROGATION:** The Company agrees to waive all rights of subrogation against the Town, its elected or appointed officials, agents and employees for losses paid under the terms of this policy which arise from work performed by the Named Insured for the Town.

C. SIGNATURE OF INSURER OR AUTHORIZED REPRESENTATIVE OF THE INSURER

I, _____(print/type name), warrant that I have authority to bind the below-listed insurance company and by my signature hereon do so bind this company.

Signature of _____
Authorized Representative
(original signature on endorsement furnished to the Town)

ORGANIZATION: _____ TITLE: _____

ADDRESS: _____ TELEPHONE: _____

Town of Los Altos Hills
Town Hall
Los Altos Hills, CA 94022
Attention: Richard Chiu
Public Works Director

LOS ALTOS HILLS ("the Town")
A General Law City

CERTIFICATE OF INSURANCE

This certifies that the following described policies have been issued to the insured named below and are in force at this time.

Insured _____

Address _____

Description of operations/locations/products insured (show Contract name and/or number if any).

POLICIES AND INSURERS	LIMITS Bodily Injury	Property Damage	EXPIRATION DATE Policy Number
Worker's Compensation Insurer	Employer's Liability $		
Commercial General Liability Insurer	Each Occurrence Aggregate	Each Occurrence Aggregate Combined Single Limit	
Business Auto Policy Liability Coverage Symbol Insurer	Each Person Each Accident	Each Accident Combined Single Limit	
Umbrella Liability Insurer	Occurrence/Aggregate $ Self-Retention $		

The following coverages or conditions are in effect:		
Yes ☐	No ☐	The Town, its officials, and employees are named on all liability policies described above as insured as respects: (a) activities performed for the Town or on behalf of the named insured, (b) products and completed operations of the named insured and (c) premises owned, leased or used by the named insured
Products and completed operations:		
Yes ☐	No ☐	The undersigned will mail to the Town 30 days written notice of cancellation or reduction of coverage or limits, cross liability clause (or equivalent wording).
Yes ☐	No ☐	Personal Injury, perils A, B, and C.
Yes ☐	No ☐	Broad form property damage.
Yes ☐	No ☐	X, C, U hazards included.
Yes ☐	No ☐	Contractual liability coverage applying to this Contract.
Yes ☐	No ☐	Liquor liability.
Yes ☐	No ☐	Coverage afforded the Town, its officials, employees and volunteers as an insured applies as primary and not excess or contributing to any insurance issued in the name of the Town.
Yes ☐	No ☐	Waiver of subrogation from worker's compensation insurer.

This certificate is issued as a matter of information. This certificate is not an insurance policy and does not amend, extend or alter the coverage afforded by the policies listed herein. Not withstanding any requirement, term or condition of any contract or other document with respect to which this certificate or insurance may be issued or may pertain, the insurance afforded by the policies described herein is subject to all the terms, exclusions and conditions of such policies.

Agency or Brokerage	Insurance Company
Address	Home Office
Name of Person to be Contacted	Authorized Signature
Telephone	Date

NOTE: Authorized signature may be the agent's, if agent has placed insurance through an agency agreement with the insurer. If insurance is brokered, authorized signature must be that of official of insurer.

TOWN OF LOS ALTOS HILLS
Staff Report to the City Council

June 18, 2015

SUBJECT: AUTHORIZATION TO EXECUTE AN AMENDMENT TO THE MAINTENANCE SERVICES AGREEMENT BETWEEN THE TOWN OF LOS ALTOS HILLS AND WEST BAY SANITARY DISTRICT FOR OPERATION AND MAINTENANCE OF LOS ALTOS HILLS SANITARY SEWER SYSTEM

FROM: Richard Chiu, City Engineer/Public Works Director R. Chiu

APPROVED: Carl Cahill, City Manager C.C.

RECOMMENDATION: That the City Council:

Adopt the attached resolution authorizing the City Manager to execute an amendment to the agreement with **West Bay Sanitary District** to providing operation and maintenance services for sanitary sewer systems, overflow emergency response services, asset management services, manhole data collection, and root foaming for another three years.

BACKGROUND

The Town owns and operates the sanitary sewer collection system consisting of approximately 296,070 feet (±56 miles) of pipes. Pipe diameters range from 4 to 12 inches, with approximately 77% of the system being vitrified clay pipe and 74% of the system being 6 inches in diameter. There are approximately 1,700 manholes and cleanouts including two lift stations at O'Keefe Road and Purissima Road. The sewer mains run under the roadway, sewer easements in the private properties, and Town's open space. The collected sewage is conveyed to the Palo Alto Regional Water Quality Control Plant through the collection systems of the City of Palo Alto and the City of Los Altos.

The Town is responsible for maintaining sewer mains. In accordance with section 6-4.443(7) of the municipal code, maintenance of the sewer lateral between the building and the main is the private property owner's responsibility. The agreement with West Bay pertains to maintenance and operation of the Town's sewer mainlines only and does not include private laterals.

In June of 2014, the City Council authorized the City Manager to execute an agreement with West Bay Sanitary District (West Bay) to provide operation and maintenance services as well as emergency overflow response services.

West Bay Sanitary District, headquartered in Menlo Park, is an independent Special District formed in 1902. They provide wastewater collection and conveyance services to City of Menlo Park, Atherton, Portola Valley, and areas of East Palo Alto, Woodside, and unincorporated San Mateo and Santa Clara counties. They currently provide service for over 260 miles of sewer pipeline (including Los Altos Hills).

DISCUSSION

West Bay has been under contract with the Town for about 10 months and they have provided responsive service consistent with the terms of the current agreement. Approximately 16 miles of pipeline have been cleaned, 10 miles have been videoed, and 5 sanitary sewer overflows have been responded to by West Bay. Sanitary sewer overflows have been reduced by 90% from the first quarter of 2014 to the first quarter of 2015. Also 2 sewer pump stations have been maintained and the transition to a new Computerized Maintenance Management System (CMMS) has been completed.

West Bay is interested in extending the contract for another three years. Town staff and Town's sewer consultant discussed scope changes with West Bay to increase the footages for cleaning and CCTV inspections. Additional cleaning footage is needed for segments on the high frequency cleaning schedule and to maintain an overall cycle of about 2.5 years. Additional CCTV footage is desired to accelerate completion of one round of coded video data in approximately 2.5 years. To facilitate hydraulic modeling of the sewer system and improve the accuracy of the GIS mapping, an option to obtain manhole elevation and coordinate information is also included in the scope of work as recommended by the V.W. Housen & Associates Technical Memo dated January 8, 2015. Another option provided is to perform root foaming of approximately 17% of the Town's lines using West Bay's existing root foaming contract. Actual quantity for root foaming may be adjusted based on development of a root foaming plan and additional information. Proposed root foaming unit price is approximately 4.5% lower than the Town's previous root foaming unit price. All data collected from cleaning, videoing, root foaming, and manhole locating will be updated into the Town's CMMS system by West Bay to facilitate more efficient and better planning for future maintenance activities.

West Bay's proposal includes an overall 3 percent annual cost of living adjustment along with the following adjustments and options:

1. Additional $0.10 per lineal foot of cleaning to cover cost associated with transporting water in the Purissima Hills Water District (PHWD) service area where access to PHWD fire hydrants are not available. Additional travel time is needed to obtain water from CalWater hydrants or from the sole designated PHWD filling station near Town Hall. The availability of only one filling station for the entire PHWD service area requires increased water transport efforts.

2. Additional $300.00 per sanitary sewer overflow response to cover actual cost incurred by West Bay. West Bay's original unit cost is $300 to $500 short of their actual cost.

3. Option cost for manhole data collection of $57.50 per manhole. This is a pass through cost of West Bay's contractor with a cost of $50.00 per manhole plus a 15% overhead charge to West Bay.

4. Option cost for root foaming of $1.04 per lineal feet (6" line) with an estimated quantity of 50,000 feet.

The proposed three year extension with West Bay has been reviewed by staff and the Town's sewer consultant and the recommendation is to adopt the attached resolution authorizing the City Manager to execute an extension with **West Bay Sanitary District**

for providing operation and maintenance services for sanitary sewer systems, 24/7 emergency and call-out services, asset management services, manhole data collection, and root foaming. This three year contract agreement has a not-to-exceed amount of $1.28 million. The three year extension will ensure maintenance consistency and budget predictability for the Town and will allow West Bay to complete one full round of cleaning and CCTV work on the entire system. The proposed term of the amended agreement is from August 1, 2015 to July 31, 2018.

FISCAL IMPACT:

Sufficient funds are included in the Proposed Fiscal Year 2015-16 Sewer Operating Fund Operating and Maintenance Account (015-4800-6140) to cover the first year cost ($440,000) of this extension. Additional allocation of $450,000 and $390,000 are needed for fiscal year 2016-17 and fiscal year 2017-18 respectively.

ATTACHMENTS:

1. Resolution
2. Proposed amended agreement scope of work and cost from West Bay Sanitary District
3. Existing agreement with West Bay Sanitary District

Appendix C
Operation & Maintenance Program Element
Supporting Documents

Appendix C Documents

1. West Bay Map Change Form
2. List of sewer as-built drawings
3. Sewer Enterprise Fund
4. West Bay Mainline Worksheet
5. Hotspot cleaning list (updated as needed)
6. West Bay Cleaning Matrix
7. West Bay Pump Station Inspection Form
8. West Bay Staff CWEA Certifications
9. West Bay Fleet and Equipment List
10. West Bay Spare Parts Inventory

Appendix C – Document 1
West Bay Map Change Form

Map Change Form

EXISTING INFORMATION

USID _____ DSID _____ Pipe Size____ Pipe Material____ Footage_____

Address_____ Street_____

City_____ ZIP_____

Access Contact _____ Number _____ Gate Code _____

NEW INFORMATION

USID _____ DSID _____ Pipe Size____ Pipe Material____ Footage_____

Address_____ Street_____

City_____ ZIP_____

Access Contact _____ Number _____ Gate Code _____

REASON FOR CHANGE: _____

_____

_____

CHANGE INITIATED BY: _____ _____

(SIGNED) (DATE)

****

NOTE: The changes on this form must be made to all of the following that apply. Upon final sign-off approval.

	SIGNATURE	DATE
GIS UPDATE	_____	_____
MAP UPDATE	_____	_____
Lucity CUSTOMER FILE UPDATED	_____	_____
Lucity PIPE FILES UPDATED	_____	_____
FINAL APPROVAL	_____ (Projects Manager)	_____ (Date)

AG-100.Doc

Appendix C – Document 2
List of Sewer-As-Built Drawings

DRAWER No. 6 SANITARY SEWER PLANS – Indexed chronologically

Street Names

Albertsworth Lane 10440, Sewer Extension, As-Built, November 2010

Alexis Drive and Page Mill Road, March 1961

Alta Lane North 13060, Offsite Improvement, October 1993

Alta Lane South 13081, Sanitary Sewer Force Lateral & Main, November 1996

Altamont Basin, Proposed Sewer District, January 1968

Altamont Road, June 1972

Altamont Road and Moody Road, Lands of Bledsoe, March 1978

Altamont Road West of Briones, Off-Site Sewer, As-Built, June 2003

Altamont Road West of Briones, Off-Site Sewer, Design, June 2003

Altamont Road 27361 (from Briones Way to Westwind Barn), Sanitary Sewer Force Main Extension, As-built, February 2005

Altamont Road 27361 (from Briones Way to Westwind Barn), Sanitary Sewer Force Main Extension, Design, February 2005

Alternate Sewer Routes for Secondary Sewer Line from Unit 1 & 2 of Palo Altos Hills to Palo Altos Main Sewer Line

Arastradero Road 27580, Twin Oaks Estates Private Sanitary Force Main, October 2003

Avila Court and Elena Road, Lateral Connection, November 2003

Beaver Lane (26989) Sanitary Sewer Main Extension October 2007

Birch Hill Way 26715, Septic System As-Built Plan, July 1995

Briones Way and Via Cerro Gordo, Sewer Extension for Tract 4019, July 1969

Burke Road (Burke to 250' South of Chapin Road) Sanitary Sewer Extension, July 2005

Burke Road (to Old Altos) Sanitary Sewer Extension, June 2000

DRAWER No. 6 SANITARY SEWER PLANS – Indexed chronologically

Street Names

Campo Vista Lane Street Improvements Sanitary Sewer Extension July 1979
Campo Vista Lane, Sewer Connection, January 1993

Campo Vista Lane, Sewer Main, July 1976 (p.1 of 2)

Carado Court, June 1968

Carado Court, August 1974

Carillo Lane, September 1974

Carillo Lane, 13470, Sewer Connection, October 1993

Christophers Lane, November 1969

Christophers Lane, Sanitary Sewer Main Extension (For 28199, 28221, 28238, 28263) August 2006

City of Los Altos Sewer Plan

City of Palo Alto Sewer Plans, December 1988

Corbetta Lane, Altamont Road and Dezahara Way, January 1968

Country Club, Viscaino Drive & Place, Sanitary Sewer Gravity Main, November 2001

De Bell Road (14360) and Manuella Road, Sanitary Sewer Main, December 2001

Debell Road, Sanitary Sewer Main Extension, July 1997

Eastbrook School (Between Mora Drive & St. Joseph's Avenue), Offsite Sanitary Sewer, July 1960

El Monte Road, As-Built, Sanitary Sewer Main Replacement, June 2007

Elena Road 25706, Vinedo Estates, As-Built, December 2008

Elena Road 25706, Vinedo Estates, Design, July 2008

Elena Road 25769, Sanitary Sewer Plan, As-Built, May 2003

Elena Road, (Purissima Road and Elena Road), Lands of Yazdani, As-Built, Sewer Gravity Line, August 2000 (p.3 of 4)

Elena Road, (Purissima Road and Elena Road), Lands of Yazdani, Revised, Sewer Gravity Line, August 2000

Elena Road, As-Built & Design, (from South of Purissima Ave. to Natoma Rd.), October 2000

Elena Road, As-Built, June 1993

Elise Court 24275, As-Built, August 2001

Entrada Place 11331, Sanitary Sewer Main Extension January 2007

Estacada Drive 25851 and Estacada Way, Sewer Extension, June 1974

Foothill Expressway Unit 2 & Estacada Way, September 1965

Fremont Road (from Templeton Place to Lenox Way), March 2004

Fremont Road and Templeton Place, Sanitary Sewer Main Extension, June 1998

Fremont Road and Burke Road, Sanitary Sewer Facilities, As-Built, August 2003

Fremont Road and Miranda Road, Sewer Extension, April 1972

Fremont Road, Manuella Road & Pine Lane (W. Fremont School), Offsite Sanitary Sewer, August 1961

Fremont Road, Sanitary Sewer Laterals to Serve Lot 3, Tract 5470 and Lot 6, Tract 1105, October 1974

Gerth Lane (2275) Sanitary Sewer Main Extension November 2005

Hidden Spring Court 25518, Altamont Road, March 2004

Hooper Lane, Sewer Facilities, August 1998

Jarvis Way, September 1973

DRAWER No. 6 SANITARY SEWER PLANS – Indexed chronologically

Street Names

La Cresta Drive 13001 and Anacapa Drive, Sanitary Sewer Improvement, May 1997

La Cresta Drive 13482, Sewer Force Main & Lateral, As-Built, March 1995
La Cresta Drive 13482, Sewer Force Main & Lateral, Design, March 1995

La Loma Court 24905 & 24900, September 2000

La Loma Court 24910, Sewer Improvement, June 2006

La Loma Drive 25005, As-Built, October 2001

La Loma Drive 25005, Design, October 2001

La Paloma Road and Alta Tierra Road, Sewer Extension, Lands of Noller, August 1978

LAH Improvement Plans for Sewer Assessment District No. 2, 3 & 10

Lands of Traficanti, October 1978

Lands of Yen, Progress Print, May 1996

Lands of Zappetini, Sewer Pumping Station, March 1989 (p.4A of 4)

Lomita Linda 25701 & 25703, Lands of Chao, Pang & Stitt, Sewer Line Extension, As-built, October 1998

Lowell Avenue, April 1981 (p.5 of 5)

Lupine Rd 27835, Sewer Extension, May 1999

Magdalena Avenue 11240, May 1998

Magdalena Road 10699, Lift-Station, January 2003

Magdalena Road, from 70' East of Blandor way to 150' West of Albertsworth Lane, Sewer Extension, August 2010

Magdalena Road & Blandor Way, Sanitary Sewer Facilities, March 2000

Magdalena Road & Elise Court, September 1999

DRAWER No. 6 SANITARY SEWER PLANS – Indexed chronologically

Street Names

Manuella Avenue, Lands of Stratton, August 1979

Manuella Road, Sewer Extension, July 1970

Master Sanitary Sewer Map of Los Altos Hills

Matadero Creek, January 2002

Miranda & Estacada, Sanitary Sewer Extension, no date

Miranda Avenue at Miranda Court, Sewer Main Extension, As-Built, August 1997

Miranda Court, June 2002

Miranda Court, As-Built, Sanitary Sewer Extension, July 2000 (p.1 of 2)

Miranda Road 14241, Sewer Extension, April 2004 (p.2 of 3)

Miranda Road and Foothill Expressway, December 1966

Miranda Way 14317, As-Built, May 2002

Miranda Way 14317, Design, May 2002

Moody Road 26220, Sewer Lateral, June 1995

Moody Road, (from Chaparral Way to 27381 Moody Rd.), Sanitary Sewer Facilities, September 2000

Mora Drive, As-Built, September 2001

Mora Drive, As Built, CleanOut locations, June 2002

Mora Heights Way, Sanitary Sewer Facilities, As-Built, July 2003

Natoma Road (from La Vida Real to Elena Road), Sanitary Sewer Extension, July 2010

Page Mill Road (11990) & Altamont Road, Sanitary Sewer Force Main Extension November 2007

DRAWER No. 6 SANITARY SEWER PLANS – Indexed chronologically

Street Names

Page Mill Road and Gerth Lane, Lands of Baumgartner, June 1977

Page Mill Road and Via Ventana Way, Sanitary Sewer Facilities, May 1997

Palo Alto Hills Unit 1, In-Tract & Outfall Sanitary Sewer, Tract 2513, May 1961

Pine Lane (at Foothill Expressway) Sanitary Sewer Diversion Project, May 2008

Pink Horse Ranch Lot 5, Tepa Way 12254, Sewer Investigation, no date

Pricilla Lane 12366, Sanitary Sewer Extension GPS As-Built April 2008

Priscilla Lane 12366, Sanitary Sewer Extension, April 2007

Priscilla Lane 12368, Lot 11 “Stonebrook” Tract No. 1724, Sewer Extension, April 2000

Priscilla Lane, Sanitary Sewer Force Main (Phase I) As-Built, June 2008

Purissima Pump Station February 2001

Purissima Road 26462, Sanitary Sewer Main Extension February 2010

Purissima Road 26640 & 26642, Sanitary Sewer Force Main Extension As-Built, March 2005

Purissima Road (from Elena Road to Baker Lane), Sanitary Sewer Force Main, May 2003

Purissima Road (from Minorca Ct to Elena Rd), Gravity Line (Phase 2), November 2000

Purissima Road to La Cresta Dr, Sewer Force Main & Gravity Line, November 2000

Ravensbury Avenue (Old Ranch Road) Sewer Facilities, April 2002 (p.1-6 of 7)

Rhus Ridge Drive 11970 & 11950, Sewer Line Extension, December 2000 (p.1 of 3)

Robleda Road and Burke Basin, Sanitary Sewer Study, April 1981

DRAWER No. 6 SANITARY SEWER PLANS – Indexed chronologically

Street Names

Robleda Road and Fremont Road, June 2003 (p.2 of 5)

Saddle Mountain Estates, Page Mill Estates Portion of Lot 10, Exhibit B, October 1978

Samuel Lane, Sewer Gravity Line, February 2001

Sanitary Sewer Map (Palo Alto Basin) March 1958 – June 1984

Silent Hills Lane 26300, Sewer Main, June 2002

Stonebrook Court, Sanitary Sewer Extension, November 2003
Stonebrook Drive, May 1989

Stonebrook Drive & El Monte Road, Lands of Rich, September 1978

Sunset Drive East 13300, As-Built, Sewer Line Extension, Janurary 2012

Tepa Way, October 1969

Tripoli Court 12921, Lift Station, May 2003

Tripoli Court 12921, Revised p.2-3, May 2003

Tripoli Court 12921, Specifications, May 2003

Twin Oaks Estates (27580 Arstradero Road) Private Sanitary Sewer Pump Station, April 2004

Upper Ravensbury Avenue, July 2002

Upper Robleda Road, As-Built, November 2003

Via Ventana 27880, Sanitary Sewer Main Extension, May 2008

Vinedo Lane 25980, Sanitary Sewer Facilities, As-Built, June 2003

Vinedo Lane (Altamont Road), Sewer Extension, Lands of McFadden, July 1977

Vista Serena, Sewer Extension, May 1999

Vista Serena, Sewer Extension, Revised, May 1999

DRAWER No. 6 SANITARY SEWER PLANS – Indexed chronologically

Street Names

West Loyola Drive 10800, Sanitary Sewer Main Extension, As-Built, Lands of Verma, October 1996

West Loyola Drive 10800, Sanitary Sewer Main Extension, Field Copy, Lands of Verma, October 1996

West Loyola Drive 10800, Sanitary Sewer Main Extension, Design, Lands of Verma, October 1996

Wildcrest Drive 13331, Sanitary Sewer Plan, As-Built, January 2006

Appendix C – Document 3
Sewer Enterprise Fund

Enterprise Fund Summary

Sewer Fund	2012/13 Actual	2013/14 Actual	2014/15 Adopted	2015/16 Budget	2016/17 Budget	% Change Over 14/15
Beginning Unrestricted Fund Balance				$ 6,539,497	$ 6,639,144	15.06%
Interest Income	6,118	--	37,000	22,733	35,000	-38.56%
Sewer Charges	5,066,579	6,165,310	5,280,900	6,694,435	6,912,430	26.77%
Sewer Connection Fees	52,570	28,605	135,100	30,000	30,000	-77.79%
Sewer Revenues	**5,125,267**	**6,193,915**	**5,453,000**	**6,747,168**	**6,977,430**	**23.73%**
Sewer Maintenance	3,793,690	3,517,487	4,246,278	4,511,246	4,524,248	6.24%
Sewer Capital Program	--	--	350,551	1,756,275	2,477,000	401.00%
Sewer Equipment Purchase	--	--	--	380,000	--	--
Sewer Expenditures	**3,793,690**	**3,517,487**	**4,596,829**	**6,647,521**	**7,001,248**	**44.61%**
Ending Unrestricted Fund Balance	--	--	$ 6,539,497	$ 6,639,144	$ 6,615,326	1.52%

Revenues by Source

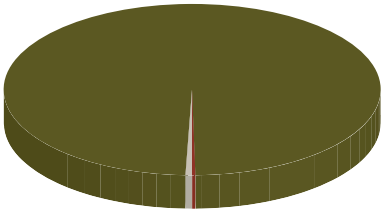

Expenditures by Category

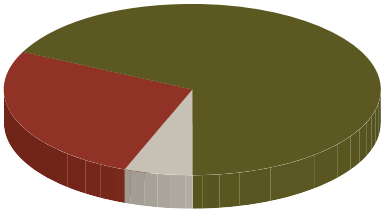

Solid Waste Fund	2012/13 Actual	2013/14 Actual	2014/15 Adopted	2015/16 Budget	2016/17 Budget	% Change Over 14/15
Beginning Unrestricted Fund Balance				$2,787,322	$3,087,966	15.92%
Interest Income	3,727	--	10,900	9,618	13,500	-11.76%
Administrative Charges	830,880	723,900	800,000	700,404	700,404	-12.45%
AB 939 Fees	39,482	22,094	21,100	21,000	21,000	-0.47%
Solid Waste Revenues	**874,088**	**745,994**	**832,000**	**731,022**	**734,904**	**-12.14%**
Solid Waste Administration	**354,733**	**368,194**	**449,120**	**430,377**	**435,037**	**-4.17%**
Ending Unrestricted Fund Balance	--	--	$ 2,787,322	$ 3,087,966	$ 3,387,834	10.79%

Revenues by Source

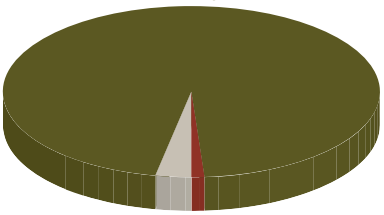

Appendix C – Document 4
West Bay Mainline Worksheet

L.A.H MAIN LINE WORKSHEET

DATE : _____ CREW #'S : _____

UNIT	U/S ID	D/S ID	FTG.	DEB.	SEV.	COND.	SEV.	TIME	WORK ORDER #

MD-505

Appendix C – Document 5
Hot Spot Cleaning List (updated as needed)

Town of Los Altos Hills Hot Spot List as of December 2015

Alt Pipe ID	US Struc	DS Struc	Branch	Frequency	Diameter	Length
LAH_AMH1021-AMH1020	AMH1021	AMH1020	Branch 1	12 Month	6	432.9
LAH_AMH1022-AMH1021	AMH1022	AMH1021	Branch 1	12 Month	8	47
LAH_CMH1005-CMH1004	CMH1005	CMH1004	Branch 3	12 Month	6	171
LAH_FMH1052-FMH1051	FMH1052	FMH1051	Branch 3	12 Month	6	180
LAH_FMH1053-FMH1052	FMH1053	FMH1052	Branch 3	12 Month	6	349
LAH_BMH1037-BMH1038	BMH1037	BMH1038	Branch 2	12 Month	8	183
LAH_EMH1039-EMH1038	EMH1039	EMH1038	Branch 2	12 Month	6	272
LAH_EMH1137-EMH1126	EMH1137	EMH1126	Branch 2	12 Month	6	295
LAH_EMH1136-EMH1137	EMH1136	EMH1137	Branch 2	12 Month	6	318
LAH_EMH1184-EMH1155	EMH1184	EMH1155	Branch 2	12 Month	6	392
LAH_EMH1176-EMH1177	EMH1176	EMH1177	Branch 2	12 Month	8	276
LAH_HMH1034-HMH1036	HMH1034	HMH1036	Branch 2	12 Month	6	214
LAH_HMH1111-HMH1112	HMH1111	HMH1112	Branch 2	12 Month	6	130
LAH_KMH1080-KMH1082	KMH1080	KMH1082	Branch 5	12 Month	6	61
LAH_KMH1082-KMH1085	KMH1082	KMH1085	Branch 5	12 Month	6	114
LAH_PMH1152-PMH1149	PMH1152	PMH1149	Branch 6	12 Month	6	260
LAH_QMH1028-QMH1008	QMH1028	QMH1008	Branch 6	12 Month	6	292
LAH_QMH1001-QMH1009	QMH1001	QMH1009	Branch 6	12 Month	6	316
LAH_QMH1008-QMH1009	QMH1008	QMH1009	Branch 6	12 Month	6	216
LAH_QMH1018-QMH1013	QMH1018	QMH1013	Branch 6	12 Month	6	24
LAH_QMH1015-QMH1016	QMH1015	QMH1016	Branch 6	12 Month	6	165
LAH_QMH1013-QMH1016	QMH1013	QMH1016	Branch 6	12 Month	6	189
LAH_QMH1076-QMH1017	QMH1076	QMH1017	Branch 7	12 Month	6	91
LAH_QMH1025-QMH1018	QMH1025	QMH1018	Branch 6	12 Month	6	257
LAH_QMH1021-QMH1020	QMH1021	QMH1020	Branch 6	12 Month	8	99
LAH_QMH1016-QMH1020	QMH1016	QMH1020	Branch 6	12 Month	6	269
LAH_QMH1024-QMH1023	QMH1024	QMH1023	Branch 6	12 Month	6	95
LAH_QMH1026-QMH1025	QMH1026	QMH1025	Branch 6	12 Month	6	58
LAH_QMH1029-QMH1028	QMH1029	QMH1028	Branch 6	12 Month	6	209
LAH_QMH1030-QMH1031	QMH1030	QMH1031	Branch 7	12 Month	6	189
LAH_QMH1031-QMH1033	QMH1031	QMH1033	Branch 7	12 Month	6	67
LAH_QMH1043-QMH1042	QMH1043	QMH1042	Branch 7	12 Month	6	148
LAH_QMH1044-QMH1043	QMH1044	QMH1043	Branch 7	12 Month	6	72
LAH_QMH1033-QMH1043	QMH1033	QMH1043	Branch 7	12 Month	6	118
LAH_QMH1017-QMH1044	QMH1017	QMH1044	Branch 7	12 Month	6	146
LAH_QMH1019-QMH1045	QMH1019	QMH1045	Branch 6	12 Month	8	364
LAH_QMH1048-QMH1046	QMH1048	QMH1046	Branch 6	12 Month	6	413
LAH_QMH1046-QMH1049	QMH1046	QMH1049	Branch 6	12 Month	8	259
LAH_QMH1049-QMH1050	QMH1049	QMH1050	Branch 6	12 Month	8	277
LAH_QMH1060-QMH1055	QMH1060	QMH1055	Branch 6	12 Month	6	381
LAH_QMH1055-QMH1057	QMH1055	QMH1057	Branch 6	12 Month	6	464.8
LAH_QMH1042-QMH1066	QMH1042	QMH1066	Branch 7	12 Month	6	114.4
LAH_QMH1067-QMH1066	QMH1067	QMH1066	Branch 7	12 Month	6	65
LAH_QMH1070-QMH1076	QMH1070	QMH1076	Branch 7	12 Month	6	214
LAH_BMH1029-BMH1030	BMH1029	BMH1030	Branch 2	12 Month	8	113
LAH_EMH1066-EMH1065	EMH1066	EMH1065	Branch 2	12 Month	8	313
LAH_EMH1057-EMH1066	EMH1057	EMH1066	Branch 2	12 Month	8	344

Town of Los Altos Hills Hot Spot List as of December 2015

Alt Pipe ID	US Struc	DS Struc	Branch	Frequency	Diameter	Length
LAH_AMH1002-AMH1003	AMH1002	AMH1003	Branch 1	12 Month	6	352
LAH_AMH1003-AMH1004	AMH1003	AMH1004	Branch 1	12 Month	6	93
LAH_AMH1010-AMH1009	AMH1010	AMH1009	Branch 1	12 Month	6	224
LAH_AMH1011-AMH1010	AMH1011	AMH1010	Branch 1	12 Month	6	50
LAH_AMH1012-AMH1011	AMH1012	AMH1011	Branch 1	12 Month	6	265
LAH_CMH1003-CMH1001	CMH1003	CMH1001	Branch 3	12 Month	6	263
LAH_CMH1004-CMH1003	CMH1004	CMH1003	Branch 3	12 Month	6	270
LAH_FMH1013-CMH1005	FMH1013	CMH1005	Branch 3	12 Month	6	171
LAH_EMH1087-EMH1086	EMH1087	EMH1086	Branch 3	12 Month	6	209
LAH_FMH1042-FMH1013	FMH1042	FMH1013	Branch 3	12 Month	6	148
LAH_FMH1046-FMH1045	FMH1046	FMH1045	Branch 3	12 Month	6	113
LAH_IMH1051-IMH1050	IMH1051	IMH1050	Branch 2	12 Month	6	114
LAH_IMH1056-IMH1051	IMH1056	IMH1051	Branch 2	12 Month	6	185
LAH_IMH1054-IMH1056	IMH1054	IMH1056	Branch 2	12 Month	6	295
LAH_KMH1045-KMH1046	KMH1045	KMH1046	Branch 5	12 Month	6	231
LAH_KMH1046-KMH1047	KMH1046	KMH1047	Branch 5	12 Month	6	301
LAH_KMH1047-KMH1048	KMH1047	KMH1048	Branch 5	12 Month	6	162
LAH_KMH1048-KMH1049	KMH1048	KMH1049	Branch 5	12 Month	6	280
LAH_KMH1050-KMH1051	KMH1050	KMH1051	Branch 5	12 Month	6	173
LAH_BCO1002-BMH1007	BCO1002	BMH1007	Branch 2	12 Month	6	108
LAH_BMH1027-BMH1028	BMH1027	BMH1028	Branch 2	12 Month	8	156
LAH_BMH1028-BMH1029	BMH1028	BMH1029	Branch 2	12 Month	8	139
LAH_BMH1053-BMH1034	BMH1053	BMH1034	Branch 2	12 Month	6	207
LAH_BMH1051-BMH1052	BMH1051	BMH1052	Branch 2	12 Month	6	371.5
LAH_BMH1052-BMH1053	BMH1052	BMH1053	Branch 2	12 Month	6	116
LAH_DMH1004-DMH1002	DMH1004	DMH1002	Branch 1	12 Month	6	128
LAH_DMH1005-DMH1004	DMH1005	DMH1004	Branch 1	12 Month	6	256
LAH_DMH1029-DMH1028	DMH1029	DMH1028	Branch 1	12 Month	6	313
LAH_DMH1040-DMH1039	DMH1040	DMH1039	Branch 1	12 Month	6	203
LAH_DMH1041-DMH1040	DMH1041	DMH1040	Branch 1	12 Month	6	314
LAH_ECO1005-EMH1018	ECO1005	EMH1018	Branch 2	12 Month	6	94
LAH_EMH1030-EMH1028	EMH1030	EMH1028	Branch 2	12 Month	6	284
LAH_EMH1032-EMH1031	EMH1032	EMH1031	Branch 2	12 Month	6	133
LAH_ECO1009-EMH1048	ECO1009	EMH1048	Branch 2	12 Month	6	53
LAH_EMH1083-EMH1082	EMH1083	EMH1082	Branch 2	12 Month	6	352
LAH_EMH1085-EMH1084	EMH1085	EMH1084	Branch 2	12 Month	6	343
LAH_EMH1082-EMH1085	EMH1082	EMH1085	Branch 2	12 Month	6	158
LAH_EMH1088-EMH1087	EMH1088	EMH1087	Branch 3	12 Month	6	328
LAH_EMH1094-EMH1092	EMH1094	EMH1092	Branch 3	12 Month	6	290
LAH_EMH1095-EMH1093	EMH1095	EMH1093	Branch 3	12 Month	6	288
LAH_EMH1096-EMH1095	EMH1096	EMH1095	Branch 3	12 Month	6	37
LAH_EMH1104-EMH1105	EMH1104	EMH1105	Branch 3	12 Month	6	322
LAH_EMH1181-EMH1153	EMH1181	EMH1153	Branch 2	12 Month	6	318
LAH_EMH1157-EMH1158	EMH1157	EMH1158	Branch 2	12 Month	6	260
LAH_EMH1158-EMH1159	EMH1158	EMH1159	Branch 2	12 Month	6	338
LAH_EMH1160-EMH1159	EMH1160	EMH1159	Branch 2	12 Month	6	229
LAH_EMH1161-EMH1160	EMH1161	EMH1160	Branch 2	12 Month	6	92

Town of Los Altos Hills Hot Spot List as of December 2015

Alt Pipe ID	US Struc	DS Struc	Branch	Frequency	Diameter	Length
LAH_ECO1016-EMH1163	ECO1016	EMH1163	Branch 2	12 Month	6	96
LAH_EMH1163-EMH1165	EMH1163	EMH1165	Branch 2	12 Month	6	129
LAH_EMH1172-EMH1171	EMH1172	EMH1171	Branch 2	12 Month	6	298
LAH_EMH1170-EMH1171	EMH1170	EMH1171	Branch 2	12 Month	6	282
LAH_EMH1171-EMH1174	EMH1171	EMH1174	Branch 2	12 Month	6	291
LAH_EMH1154-EMH1176	EMH1154	EMH1176	Branch 2	12 Month	6	336
LAH_EMH1188-EMH1176	EMH1188	EMH1176	Branch 2	12 Month	8	165
LAH_ECO1019-EMH1181	ECO1019	EMH1181	Branch 2	12 Month	6	188
LAH_EMH1194-EMH1195	EMH1194	EMH1195	Branch 2	12 Month	6	243
LAH_GMH1002-GMH1003	GMH1002	GMH1003	Branch 1	12 Month	6	296
LAH_GMH1003-GMH1011	GMH1003	GMH1011	Branch 1	12 Month	6	359
LAH_GMH1053-GMH1052	GMH1053	GMH1052	Branch 1	12 Month	6	59
LAH_GMH1055-GMH1054	GMH1055	GMH1054	Branch 1	12 Month	6	152
LAH_GMH1079-GMH1080	GMH1079	GMH1080	Branch 1	12 Month	6	231
LAH_GMH1080-GMH1083	GMH1080	GMH1083	Branch 1	12 Month	6	232
LAH_IMH1050-HMH1110	IMH1050	HMH1110	Branch 2	12 Month	6	410
LAH_HMH1110-HMH1111	HMH1110	HMH1111	Branch 2	12 Month	6	210
LAH_HMH1112-HMH1113	HMH1112	HMH1113	Branch 2	12 Month	6	251
LAH_KMH1017-KMH1016	KMH1017	KMH1016	Branch 5	12 Month	6	91
LAH_KMH1105-KMH1025	KMH1105	KMH1025	Branch 5	12 Month	6	347
LAH_KMH1065-KMH1049	KMH1065	KMH1049	Branch 5	12 Month	6	136
LAH_KMH1051-KMH1052	KMH1051	KMH1052	Branch 5	12 Month	6	274
LAH_KMH1074-KMH1052	KMH1074	KMH1052	Branch 5	12 Month	270	269
LAH_KMH1075-KMH1074	KMH1075	KMH1074	Branch 5	12 Month	6	173
LAH_KMH1077-KMH1076	KMH1077	KMH1076	Branch 5	12 Month	6	281
LAH_KMH1078-KMH1077	KMH1078	KMH1077	Branch 5	12 Month	6	260
LAH_KMH1052-KMH1079	KMH1052	KMH1079	Branch 5	12 Month	6	193
LAH_KMH1079-KMH1080	KMH1079	KMH1080	Branch 5	12 Month	6	291
LAH_KMH1085-KMH1086	KMH1085	KMH1086	Branch 5	12 Month	6	182
LAH_KMH1086-KMH1092	KMH1086	KMH1092	Branch 5	12 Month	6	48
LAH_KMH1092-KMH1093	KMH1092	KMH1093	Branch 5	12 Month	6	351
LAH_KMH1093-KMH1097	KMH1093	KMH1097	Branch 5	12 Month	6	352
LAH_KMH1098-KMH1100	KMH1098	KMH1100	Branch 5	12 Month	6	116
LAH_KMH1100-KMH1105	KMH1100	KMH1105	Branch 5	12 Month	6	238
LAH_OMH1030-OMH1021	OMH1030	OMH1021	Branch 5	12 Month	6	77
LAH_OMH1021-OMH1029	OMH1021	OMH1029	Branch 5	12 Month	6	48
LAH_OMH1042-OMH1043	OMH1042	OMH1043	Branch 5	12 Month	6	342
LAH_OMH1044-OMH1045	OMH1044	OMH1045	Branch 5	12 Month	6	320
LAH_OMH1045-OMH1046	OMH1045	OMH1046	Branch 5	12 Month	6	157
LAH_PMH1076-PMH1077	PMH1076	PMH1077	Branch 6	12 Month	6	194
LAH_KMH1093-KMH1098	KMH1093	KMH1098	Branch 5	12 Month	6	354
LAH_EMH1012-BMH1027	EMH1012	BMH1027	Branch 2	12 Month	8	226
LAH_EMH1011-EMH1012	EMH1011	EMH1012	Branch 2	12 Month	8	69
LAH_BCO1004-BMH1018	BCO1004	BMH1018	Branch 2	12 Month	6	110
LAH_EMH1177-EMH1011	EMH1177	EMH1011	Branch 2	12 Month	8	30
LAH_EMH1117-EMH1110	EMH1117	EMH1110	Branch 2	12 Month	8	327
LAH_EMH1118-EMH1117	EMH1118	EMH1117	Branch 2	12 Month	8	333

Town of Los Altos Hills Hot Spot List as of December 2015

Alt Pipe ID	US Struc	DS Struc	Branch	Frequency	Diameter	Length
LAH_EMH1071-EMH1118	EMH1071	EMH1118	Branch 2	12 Month	8	439
LAH_HMH1076-HMH1025	HMH1076	HMH1025	Branch 2	12 Month	6	362
LAH_HMH1026-HMH1025	HMH1026	HMH1025	Branch 2	12 Month	6	162
LAH_HMH1065-HMH1064	HMH1065	HMH1064	Branch 2	12 Month	6	189
LAH_HMH1077-HMH1073	HMH1077	HMH1073	Branch 2	12 Month	6	398
LAH_HCO1003-HMH1076	HCO1003	HMH1076	Branch 2	12 Month	6	46
LAH_CMH1001-CMH1002	CMH1001	CMH1002	Branch 3	6 Month	6	120
LAH_EMH1010-BMH1047	EMH1010	BMH1047	Branch 2	6 Month	6	368
LAH_EMH1165-EMH1164	EMH1165	EMH1164	Branch 2	6 Month	6	120
LAH_EMH1174-EMH1188	EMH1174	EMH1188	Branch 2	6 Month	8	413
LAH_LMH1144-LMH1131	LMH1144	LMH1131	Branch 5	6 Month	6	201
LAH_OMH1057-OMH1056	OMH1057	OMH1056	Branch 5	6 Month	8	119
LAH_OMH1101-OMH1100	OMH1101	OMH1100	Branch 5	6 Month	6	268
LAH_QMH1009-QMH1015	QMH1009	QMH1015	Branch 6	6 Month	6	238
LAH_QMH1023-QMH1021	QMH1023	QMH1021	Branch 6	6 Month	8	261
LAH_QMH1027-QMH1026	QMH1027	QMH1026	Branch 6	6 Month	6	126.6
LAH_QMH1014-QMH1026	QMH1014	QMH1026	Branch 6	6 Month	6	62
LAH_OMH1042-OMH1044	OMH1042	OMH1044	Branch 5	6 Month	6	344

Appendix C – Document 6
West Bay Cleaning Matrix

6.4.3.3.1 Sewer Cleaning Results Matrix

The District collects all observations made by its sewer cleaning crews regarding the extent and nature of materials removed during the cleaning process. The observations are recorded in the District's computerized information management system. The District maintains or changes the frequency of its High Frequency PM Cleaning Program for a Sewer Line Segment based on the Sewer Cleaning Results and CCTV inspection. See Matrix below in accordance with the section labeled "Action." Changes in cleaning frequency based upon cleaning results and or CCTV data shall be determined by the District Collection System Maintenance Assistant Superintendent or Superintendent and No reduction in cleaning frequency shall be made in a Sewer Line Segment with a previous history of SSOs without the approval of the District Collection System Maintenance Assistant Superintendent, or Superintendent.

Sewer Cleaning Results Matrix

	Clear	Light	Moderate	Heavy
Debris	No observable debris	Minor amount of debris 1-2 passes	moderate amounts of debris 3-4 passes	Significant amounts of debris More than 4 passes Operator concern for future stoppage
Grease	No observable grease	Minor amounts of grease 15 minutes or less to clean 1-2 passes	Small "chunks" No "logs" 15-30 minutes to clean 3-4 passes	Big "chunks" or "logs" More than 4 passes Operator concern for future stoppage
Roots	No observable roots	Minor amounts of roots 1-2 passes	Thin stringy roots No "clumps" 3-4 passes	Thick roots Large "clumps" More than 4 passes Operator concern for future stoppage
Debris: Structural pipe fragments soil, rock, etc.	No observable materials	Specify material (if possible) Minor amounts of material	Specify material Moderate amounts of material per line segment	Specify material Significant amounts of material per line segment. Operator concern for future stoppage

Action	Decrease frequency to next lower frequency after 2 clear results (e.g. 6 months to 12 months	Continue current maintenance frequency	Increasing current maintenance frequency to next higher frequency (e.g. 6 months to 3 months) Submit follow up for CCTV assessment	Increase current maintenance frequency to next higher frequency (e.g. 6 months to 3 months) Submit follow up for CCTV assessment

Note: Mtc. Asst. Supt /Supt, may request additional CCTV data to assist in decision making. Definition of "Pass"-From M/H to point of contact where observation was felt/observed.

6.4.3.4 Root Control

Roots are removed mechanically, through high pressure hydro-jetting and chain flailing during regular cleaning. Every effort is made to trap roots physically at the downstream manhole to remove them from the collection system. In 2010, the District funded and implemented a chemical root control treatment system in areas of the District with a history of root intrusion and difficult access. The root control treatment reduces the need for frequent visits by the Hydro-jet crews and significantly reduces SSOs in these areas. This cost effective approach, which allowed cleaning crews to be more productive in cleaning more pipeline in other areas of the District, will be continued in the future.

6.4.3.5 Pump Station/Siphon Maintenance

District maintenance staff performs regular inspections and maintenance of the District's twelve (12) publicly-owned Pump/Lift stations. In addition, District staff maintains private pump stations consisting of 41 residential grinder pump systems and 20 Septic Tank Effluent Pump Systems (STEP). Maintenance schedules for publicly-owned pump stations are performed weekly while private pump stations are checked quarterly. All of the publicly-owned pump stations are constantly being monitored using the District's telemetry system 24-hours per day.

The District maintains five (5) siphons that are designed to be self-flushing. The siphons are monitored every other week; as well as, chemically treated and high pressure hydro-jet cleaned monthly.

6.4.3.6 Odor Control

The District has few odor complaints – less than five per year. However, when odor complaints are received, District crews respond with an on-site investigation and improvements, if needed. For example, the District has been working with an isolated odor issue at the Corte Madera pump station. The District is currently dosing the pump station with Helix-Commander odor control product to control the odors and H2S. Its effectiveness is measured regularly with the District's OdaLogger Unit.

Appendix C – Document 7
West Bay Pump Station Inspection Form

WEST BAY
SANITARY DISTRICT

SCHEDULED PUMP MAINTENANCE INSPECTION REPORT

PUMP INFORMATION

Owner's Name_____

Address_____

_____

Location of Installation_____

_____

Pump Model_____Serial No._____HP_____Voltage_____O

MAINTENANCE CHECKLIST

1. Motor insulation check through power cables at control panel using megger. Do not megger sensors.

   Red to ground_____ohms White to ground_____ohms

   Black to ground_____ohms

2. List any faulty connections_____

   _____

3. Line voltage supply (pump off) RW_____WB_____BR_____

4. Load voltage checks (pump on) RW_____WB_____BR_____

5. Amperage draw R_____ W_____ B_____

6. Bearing vibration_____

7. Coast down time_____and direction of rotation_____

8. Any problems encountered while lifting pump_____

_____

9. Oil Condition_____

10. Amount of oil removed_____Amount of oil installed_____

11. Stator Chamber condition_____

12. Turn leak detector upside down. Does detector circuit function, if equipped, in control?

_____

13. Condition of impeller_____

14. Condition of wear rings_____

15. Any damage to power cables_____

16. Level sensors condition_____

Changes made_____

17. Condition of discharge connection_____

18. Test of operating cycle_____

19. Discharge pressure_____PSI recorded at_____feet above discharge if pressure guage in line.

20. Additional comments_____

_____

_____

21. Items requiring immediate attention_____

_____

_____

22. Items requiring attention by next inspection_____

_____

_____

INSPECTED BY:_____

DATE:_____

N:FORMS/MD500.DOC

Appendix C – Document 8
West Bay Staff CWEA Certifications

VII. Staff Certifications

Our staff are highly certified, and are rewarded for continuing their professional development. Our team members are also heavily involved in California Water Environment Association (CWEA). Through our contacts in this leading organization, we have access to a wide range of resources and solutions to help improve operations.

West Bay is also the Lead Agency in a grassroots effort called the Collection System of the Future. Through this project, nine Bay Area agencies have come together, and over the next year, will brainstorm and find common solutions to our highest priority agency management challenges. If selected, West Bay will share the lessons learned from this important effort with the Town of Los Altos Hills.

California Water Environment Association Certificate Holders

Certificate	Employee	West Bay Position
Grade IV	Beyer	Source Control Inspector (and Environmental Compliance Inspector Grade I)
Grade I	Brown	Construction Inspector
Grade II	Chu	Pipeline Inspection Tech *
Grade III	Coca	Field Supervisor *
Grade I	Cortez	Rehab Field Supervisor
Grade II	Hildebrand	Maintenance Worker
Grade I	Hulsmann	Pump Facility Supervisor (and Mechanical Technologist Grade III)
Grade II	Martinez	Maintenance Worker
Grade I	Patino	Field Supervisor
Grade I	Praturlon	Source Control Inspector
Grade I	Sanchez	Pump Maintenance Mechanic (Grade is held in Mechanical Tech)
Grade I	Santos	Maintenance Worker
Grade I	Simonetti	Regulatory Compliance Inspector
Grade I	Valentine	Rehab Technician
Grade IV	Ramirez	Maintenance Superintendent
Grade IV	Scott	District Manager

* NASSCO PACP Certified

WEST BAY

VII. Certifications (cont'd)

CWEA Committee Involvement

- **Jed Beyer**, Santa Clara Valley Section, Collection System Committee – Chair
- **Brian Chu**, CWEA Northern Safety Day - Liaison Affairs Support
- **Juan Coca**, Santa Clara Valley Section, Collection System Committee— Secretary and San Francisco Bay Section- Member
- **Sergio Ramirez**, Santa Clara Valley Section- Board Member and San Francisco Bay Section -Past Chair
- **Phil Scott**, CWEA Board President Elect, Former CWEA Treasurer, Richard D. Pomeroy recipient, Golden Manhole recipient
- **John Simonetti**, CWEA 2nd Year Director of State Safety Committee, Northern Safety Day Conference Committee Co-Chair, Santa Clara Valley Section Safety Committee Co-Chair

In addition, District staff have various affiliations with **CASA, BACWA, ABAG, CSDA, and WEF**

Appendix C – Document 9
West Bay Fleet and Equipment List

VI. West Bay Fleet and Equipment (cont'd)

Inspection and repair vehicles allow cost effective small repairs, including immediate repairs needed to address SSOs.

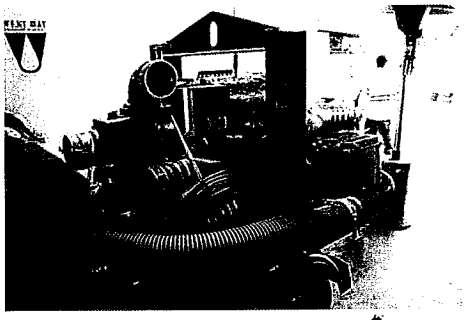

SSO response is our first priority, and West Bay maintains a dedicated SSO response truck, trailer, and bypass pumping equipment truck for effective response.

VI. West Bay Fleet and Equipment (cont'd)

Vehicles (Unit Number and Model Year)

Vehicle ID	Description
205	2012 Combo Unit (Aquatech)
201	2013 Cmax
216	2014 CCTV Unit
208	2014 Ford F350 2X4 (Service Truck)
213	1999 Ford Ranger Pickup (Source Control)
218	2007 US Trailer Jetter
212	2004 F450 Utility Truck (Assigned to Trailer Jetter)
204	2004 Power Rodder (Sreco)
207	2005 Ford Explore 4x4 (Projects Manager)
211	2008 Ford Escape (Construction Inspector)
209	2008 F550 Super Duty (Rehabilitation Crew)
202	2008 Ford Escape (Assistant Superintendent)
220	2012 New 1/2 inch Jetter on F550 4x4
203	2009 Sterling LT8500 Dump Truck
217	2011 F-350 Extended Cab w/ Utility Bed and 3 Ton Crane
214	2011 Ford F250 (Source Control)
210	2012 Ford Super Duty (Pump Truck)
206	2012 Ford Expedition (Superintendent's Vehicle)
219	2008 Traffic Control Unit
215	2003 International Hydro (SRECO) Jetter

For equipment list, see next page.

VI. West Bay Fleet and Equipment (cont'd)

Equipment (Year and Description)

Year	Description
1994	Case Backhoe 58 Super K 4x4
1989	Extend A Jet (1" easement cleaning unit)
2001	Bobcat Model 873 Loader
2011	Concrete Saw Trailer (5x10)
2006	Dynapac Asphalt Roller
2006	Ingersoll Rand Compressor/Generator
2002	Zieman Trailer (Backhoe)
2005	6" Bypass Pump
2009	Carry All Confined Space Trailer
2011	Concrete Saw
2011	6" Gorman Rupp Pump
2011	Bypass Trailer
2011	Pipe Patch Trailer
2012	Jack Hammer Attachment for Bobcat
2012	Message Traffic Arrow Board

Appendix C – Document 10
West Bay Spare Parts Inventory

Pump Station Inventory Listing

Component Inventory List, Operations Building / Pump Repair Facility									
Manufacturer	**Component**	**Control Voltage**	**Quantity**	**Part #**	**Storage Location**	**Storage Location**	**Pump Station**	**STEP SYSTEM**	**Grinder System**
Aero M	Capacitor	220/240VAC	2		Ops Bldg		x		
Agastat	Timing Module	24VDC to 240VDC	1		Ops Bldg		x		
	Timing Relay	120VAC	1	SSC12ABA	Ops Bldg		x		
Alan Bradley									
Artisan	Universal Adjustable Switch	24VDC to 240VDC	1		Ops Bldg		x		
Challenger	Circuit Breaker	120/240VAC 30A	4		Ops Bldg		x	x	x
	Circuit Breaker	120/240VAC 20A	1		Ops Bldg		x	x	x
Cutler-Hammer	Starter	600VAC	2	CE15UN3	Ops Bldg		x		
	Starter	600VAC	2	W200M3CFC	Ops Bldg		x		
	Soft Starter	480VAC	3	U801N37N3S	Ops Bldg		x		
	Starter	140VAC	2	W200M1CFC	Ops Bldg		x		
	Power Supply	24VDC	3		Ops Bldg		x		
	Starter	115VAC	7		Ops Bldg			x	
	Def. Purpose Cont.	120VAC	2		Ops Bldg		x		
Daltron									
Danahor	Start Timer	120VAC	4	HK410A6	Ops Bldg		x		
Dayton	Relay 1A485A	24VDC	2		Ops Bldg		x		
	Relay 8418	24VDC	1		Ops Bldg		x		
	Relay 8414	24VDC	1		Ops Bldg		x		
	Relay 5X827	24VDC	9		Ops Bldg		x		
	Time Delay Relay	120/240 VAC	1	5X830N	Ops Bldg		x		
	Power Relay SPST-NO-DM	120VAC	2		Ops Bldg		x		
Diversified Electronics.	Altenating Relay	240VAC	2	ARA-120-ABA	Ops Bldg		x		
	Sequencing Relay	120VAC	1	ARA-120-ARE	Ops Bldg		x		
Durant	Strat Counter	110VAC	3		Ops Bldg		x		
Design Aire									
Eagle Signal									
Eaton									
Edwards									
E-One	2000 Series Grinder Pumps	240VAC	25		Ops Bldg				x
	Extreme Pumps	240VAC	8		Ops Bldg				x
	Control Panels	240VAC	2		Ops Bldg				x
Flygt	3152 Pump	480VAC 3-phase	3		Ops Bldg		x		
	3102 Pump	240VAC	3		Ops Bldg		x		
	3102 Basic Repair Kits		4		Ops Bldg		x		
	3127 Basic Repair Kits		1		Ops Bldg		x		
	3152 Basic Repair Kits		3		Ops Bldg		x		
	Float	110VAC	3		Ops Bldg		x		
Franklin	Relay	230VAC	3		Ops Bldg		x	x	
Furnas									
Fuse Amp Trap Ltl Fuse									
Grundfos	STEP System Pumps	110VAC	28		Ops Bldg			x	
Gems	Safe-Pak	120VAC	4		Ops Bldg		x		
General Electric	Circuit Breaker	120/240VAC	2		Ops Bldg		x		
Hammond	Transformer	115VAC	3		Ops Bldg				x

Pump Station Inventory Listing

Component Inventory List, Operations Building / Pump Repair Facility									
Manufacturer	**Component**	**Control Voltage**	**Quantity**	**Part #**	**Storage Location**	**Storage Location**	**Pump Station**	**STEP SYSTEM**	**Grinder System**
IDEC	Relay RH2B	12VDC	7		Ops Bldg		x		
	Relay RH3B-U	120VAC	2		Ops Bldg		x		
	Relay RR3PA-L	120VAC	5		Ops Bldg		x		
	Relay RB2P-UL	120VAC	15		Ops Bldg		x		
	Relay RH4B-U	120VAC	1		Ops Bldg		x		
	Relay RH1B-U	120VAC	6		Ops Bldg			x	
	Electronic Timer	120/240VAC	1	RTE-PIZ	Ops Bldg		x		
Kele Associates	Amp Meter 20-A		2		Ops Bldg		x		
Kep	Start Counter	220VAC	6		Ops Bldg		x		
Klockner Moeller	Circuit Breaker	600VAC	3	NZM-6b-63	Ops Bldg		x		
	Shunt Trip	600VAC	2	PKZM3-16-NA	Ops Bldg		x		
	Shunt Trip	600VAC	1	PKZM3-25-NA	Ops Bldg		x		
	Bi-Metal Relay	600VAC	1		Ops Bldg		x		
Lights									
N.K.	Amp Meter	4-20 mA	2		Ops Bldg		x		
Omron	Relay	120VAC	5	MK2EPN-UA	Ops Bldg		x		
Orenco	Float Tree	110VAC	7		Ops Bldg			x	
	Control Panels	110VAC	5		Ops Bldg			x	
Potter Brumfield	Realy	120VAC	5	KRP11A	Ops Bldg		x		
Power Source									
Redd	Hour Meters	120VAC	4		Ops Bldg		x		
R.B. Denison	Intrinsically Safe Relay	240VAC	8		Ops Bldg		x		
Siemens	Ultrasonic Head	4-20 mA	3		Ops Bldg		x		
	Hydroranger	110VAC	2		Ops Bldg		x		
	Heavy Duty Relay	240VAC	1	PRD11AG02405	Ops Bldg		x		
	Heavy Duty Relay	240VAC	1	PRDSAY02405	Ops Bldg		x		
Sonalert									
SSAC									
Veeder Root	Hour Meter	110VAC	3		Ops Bldg		X		
Warrick Controls	Intrinsically Safe Relay	110/240VAC	2		Ops Bldg		x		
Weber									
Westing House	Circuit Breaker	600 VAC	2	HMCP100C3C	Ops Bldg		x		
	Circuit Breaker	600 VAC	2	HMCPO15FO	Ops Bldg		x		
	Starter	480 VAC	2	A200M3CAC	Ops Bldg		x		
	Circuit Breaker	120/240VAC 15A	4		Ops Bldg		x	x	x
	Circuit Breaker	120/240VAC 30A	4		Ops Bldg		x	x	x
	Indicator Lights	110VAC	15		Ops Bldg		x		
	Puh-Button	110VAC	4		Ops Bldg		x		
	Motor Control Starter	480VAC	3	A200M1CAC	Ops Bldg		x		
	Motor Control Starter	480VAC	1	A200MICW	Ops Bldg		x		
	Normally Open Contact Block	600VAC	1	PB-1A Model-B	Ops Bldg		x		
Zenith	Solid State Volt Sensor	208/240VAC	1	ARSM-2	Ops Bldg		x		
	Volt Sensitive Realy Assembly	208/240VAC	2		Ops Bldg		x		
Zerostart	Engine Heater	110VAC	2		Ops Bldg		x		

Component Inventory List
Unit 210

Component Inventory List, Operations Building / Pump Repair Facility							
Manufacturer	**Component**	**Control Voltage**	**Quantity**	**Part #**	**Pump Station**	**STEP SYSTEM**	**Grinder System**
Aero M							
Agastat	Timing Relay	120VAC	3		x		
Alan Bradley	Starter	110VAC	2			x	
Artisan							
Challenger							
Cutler-Hammer	Relay Coil	480/240VAC	1		x		
	Timer	110/240VAC	1		x		
	Multi-Pole Relay	110/120VAC	1		x		
	Indicator Light Assembly	120VAC	1		x		
	Transformer	120-480VAC	1		x		
	Power Supply	24VDC	2		x		
	Starter	480VAC	2		x		
	Soft-Starter	240/480VAC	1		x		
	Circuit Breaker	480VAC	1		x		
	Starter	110VAC	2			x	
Daltron	Power Supply	24VDC	2		x		
Danahor							
Dayton	Time Delay Relay	120 to 240VAC	1		x		
Diversified Elecronics	Alternating Realy	120VAC	3		x		
Durant							
Design Aire	Electric Heater	120VAC	1		1		
Eagle Signal	Timer	120VAC	2		x		
Eaton	SE Counter	110/120VAC	3		x		
Edwards	Transformer	120VAC	1		x		
E-One	Control Panel		1				x
Flygt	Float	110VAC	2		x		
Franklin	Motors	110VAC	5			x	
Furnas	Pilot Duty	120VAC	2		x		
Fuse-Amp Trap Ltl fuse	ATQ R7	600VAC	7		x		
	FIQ 3	500VAC	7		x		
	FNM	250VAC	7		x		
	KTK-R-1	600VAC	15		x		
	BAF6	250VAC	5		x		
	TRM 1	250VAC	5		x		
	KTK R-10	600VAC	5		x		
	ACG10	250VAC	15		x		
	3N10	30A 3	10			x	
		2A-250VAC	10			x	
		100mA	150		x		
Grundfos							
Gems	Safe-Pak	120VAC	3		x		
General Electric							
Hammond							

Component Inventory List
Unit 210

Component Inventory List, Operations Building / Pump Repair Facility							
Manufacturer	**Component**	**Control Voltage**	**Quantity**	**Part #**	**Pump**	**STEP**	**Grinder**
IDEC	Realy FH1B	24VDC	3		x		
	Relay RH2B	12VDC	3		x	x	x
	Relay RH3B-UL	120VAC	3		x		x
	Relay RR3PA-L	120VAC	3		x		
	Relay RR2BA-UL	120VAC	3		x		x
	Relay RH4B-UL	120VAC	3		x		
	Relay RH1B-U	120VAC	7		x		x
	Relay RH3B-UL	120VAC	4		x		x
	Relay RR2P-UL	120VAC	10		x		
	Electronic Timer	120VAC	2		x		
Kele Associates							
Kep	Start Counter	240VAC	4		x		
Klockner Moeller							
Lights		775	1		x		
		12 PSB	15		x		
		28 PSB	15		x		
		12 DSB LED	8		x		
		120 PSB	15		x		
		12 PSB LED	8		x		
		120 MBLS RER	11		x		
		120 MB	5		x		
		4715 RER	11		x		
		1819	11		x		
		Mb 403 r 28 r cr	11		x		
N.K.	Amp Meter	4-20 mA	3		x		
Omron	Relay	120VAC	2	MK2EPN-UA		x	
		110/120VAC	12	LY2		x	
Orenco	Control Panel		1			x	
	Float Tree	110VAC	2			x	
Potter Brumfield							
Power Source	Battery Charger	12VDC	2			x	x
Redd	Timer	120VAC	4		x		
R.B. Denison	Intrinsically Safe Relay	120VAC	3		x		
Siemens	Hydroranger		1		x		
	Ultrsonic Head	24VDC	1		x		
Sonalert	Alarm Horn	30 to 120VAC	2			x	x
SSAC	Alternating Relay	120VAC	1		x		
Veeder Root							
Warrick Controls							
Weber	Circuit Breaker	240VAC	2				x
Westing House	Horizontal Mechanical Interlock Switch	600VAC	1		x		
	Starter	480VAC	1		x		
Zenith							
Zerostart							

Re-Hab On-Hand Inventory List

QTY	Part # / Description	Vender	Address	Phone #
6	5-Gal/Bucket, Granite Seal	Granite Rock	PO BOX 50001, Watsonville, CA 95077-5001	1-831-768-2000
1	5-Gal/Bucket, Crack Seal	Granite Rock		
2	Yards, Cut-Back	Granite Rock		
2	5-Gal/Bucket, Speed Plug	Peninsula Buliding Materials	P.O. BOX 5807, Redwood City, CA 94063	
1	Pallet, 80 lb. Concrete (56 bags)	Peninsula Buliding Materials		
3	55 lb. Fast Setting Concrete	Peninsula Buliding Materials		
5	Yards, 3/4 Rock	Peninsula Buliding Materials		
5	Yards, Class II Base Rock	Peninsula Buliding Materials		
24 ft.	12" VCP	Mission Clay	P.O. BOX 1839, Corona, CA 9178-1839	1-510-568-0800
6 ft.	15" VCP	Mission Clay		
2	15" Couplers, VCP to VCP	Mission Clay		
24 ft.	4" VCP	Mission Clay		
6	4" x 4" Wye VCP	Mission Clay		
6	4" x 4" Tee VCP	Mission Clay		
12	4" 1/8th Bend VCP	Mission Clay		
12	4" 1/16th Bend VCP	Mission Clay		
24 ft.	4" Cast Iron Pipe	Mission Clay		
12	4" 1/16th Bend Cast Iron	Mission Clay		
12	4" 1/8th Bend Cast Iron	Mission Clay		
12	4" Coupler (Very)	Mission Clay		
24	4" Bushing (Thin	Mission Clay		
24	4" Bushing (Thick)	Mission Clay		
12	6" x 4" Wye	Mission Clay		
12	6" x 4" Tee	Mission Clay		

Re-Hab On-Hand Inventory List

QTY	Part # / Description	Vender	Address	Phone #
72 ft.	6" VCP	Mission Clay		
50	6" Couplers	Mission Clay		
6	8" x 4" Wye	Mission Clay		
6	8" x 4" Tee	Mission Clay		
36 ft.	8" VCP	Mission Clay		
50	8" Couplers	Mission Clay		
4	10" x 4" Wye	Mission Clay		
4	10" x 4" Tee	Mission Clay		
36 ft.	10" VCP	Mission Clay		
24	12" Couplers	Mission Clay		
2	10" C-900	Roberts & Brune Company	910 BERN COURT #150, San Jose, CA 95112	1-650-366-3833
60 ft	6" C-900 Pipe	Roberts & Brune Company		

VENDER CONTACT LIST

10002	AAA FENCE CO., INC.	2746 SCOTT BLVD	SANTA CLARA	CA	95050	1-408-727-5465
10010	A-A LOCK & ALARM	P O BOX 909	MENLO PARK	CA	94025-0909	1-800-422-5625
10005	A-A-A RENTALS	82 FIFTH AVENUE	REDWOOD	CA	94063	1-650-365-6743
10126	A TOOL SHED	2550 LAFAYETTE	SANTA CLARA	CA	95050	1-800-286-6574
10290	A-V REPAIR	448 E MIDDLEFIED ROAD	MOUNTAIN VIEW	CA	94043	1-877-633-8866
10483	ACE FIRE EQUIPMENT & SERVICE	P.O. BOX 1142	PALO ALTO	CA	94302	650-321-7440
10495	AIR-OIL SYSTEMS	PO BOX 195 753 WAMBOLD	MAINLAND	PA	19451-0195	1-215-721-9595
10604	ALAN STEEL & SUPPLY CO.	505 E BAYSHORE	REDWOOD	CA	94063	1-650-369-2526
10710	ALLEN EQUIPMENT COMPANY, INC.	755 HAMILTON AVENUE	MENLO PARK	CA	95025	1-650-323-6155
10720	ALLEN-RICCI ROOFING CO.	1306 JAMES AVE	REDWOOD	CA	94062	1-650-363-2706
10880	AMERICAN INDUSTRIAL PUMPS	PO BOX 8086	PITTSBURG	CA	94565	1-925-252-1693
12023	ATLAS PELLIZZARI ELECTRIC, INC	450 HOWLAND STREET	REDWOOD CITY	CA	94063	1-650-364-1204
12345	BACKFLOW PREVENTION SPECIALIST	3750-E CHARTER PARK DRIVE	SAN JOSE	CA	95136-1356	1-408-269-2600
12703	BARRON PARK SUPPLY CO.	377 SAN ANTONIO ROAD	MOUNTAIN VIEW	CA	94040	1-650-948-7160
12705	BARRI ELECTRIC COMPANY	991 BAKER WAY,	SAN MATEO	CA	94404	1-415-468-6477
12750	BAY ALARM	P O BOX 218	RODEO	CA	94572-0218	1-925-935-1100
12856	BAY AREA BOBCAT	42800 BOYCE ROAD	FREMONT	CA	94538	1-510-651-8200
12870	BAY AREA FLOORS	249 EL CAMINO	REDWOOD	CA	94063	1-650-324-8453
12890	BAY AREA PAVING CO.	PO BOX 6339	SAN MATEO	CA	94403	1-650-341-0351
12896	BAY CITIES DIESEL	765 MONTAGUE EXPRESSWAY	MILPITAS	CA	95305	1-408-263-1510
12910	BAY EQUIPMENT COMPANY INC.	44221 S GRIMMER BLVD	FREMONT	CA	94538	1-510-266-8800
13600	BOBCAT WEST	47132 KATO ROAD	FREMONT	CA	94538	1-510-661-5716
14140	BUCHANAN AUTO ELECTRIC	2300 MANDELA	OAKLAND	CA	94067	1-510-452-4025
14573	C & L CONCRETE PUMPING	PO BOX 310	SAN CARLOS	CA	94070-0310	1-650-366-7677
15098	CALHOUN BROTHERS GRADING &	PAVING 2784 SOUTH BASCOM AVENUE	SAN JOSE	CA	95124	1-408-727-4895
15708	CALIFORNIA WATER SERVICE	3351 EL CAMINO	ATHERTON	CA	94027-3844	1-650-854-5454
15990	CARPENTER RIGGING & SUPPLY	222 NAPOLEON	SAN	CA	94124-1028	1-415-285-1954
16210	CASE POWER & EQUIPMENT	45051 INDUSTRIAL	FREMONT	CA	94538	1-650-369-1876
16960	CIARDELLA-S GARDEN SUPPLY INC.	2027 EAST BAYSHORE ROAD	PALO ALTO	CA	94303	1-650-321-5913
17612	CONNEY SAFETY PRODUCTS	3202 LATHAM DRIVE P.O. BOX 44575	MADISON	WI	53744-4575	1-608-271-3300
18123	D & D Pipelines	PMB 408 336 Bon Air Center	Greenbrae	CA	94904-3017	1-415-441-2006
18135	D & L SUPPLY	P.O. BOX 580	OREM	UT	84059	1-801-785-5015
18139	R. J. DAILEY CONSTRUCTION	401 FIRST STREET	LOS ALTOS	CA	94022	1-650-780-0653
18179	DAVEY TREE EXPERT COMPANY	P O BOX 94532	CLEVELAND	OH	44101-4532	1-800-445-TREE
18434	DECON ENVIRONMENTAL SERVICES	23490 CONNECTICUT ST.	HAYWARD	CA	94545	1-510-265-8020
18480	DEWEY PEST CONTROL	PO BOX 7114	PASADENA	CA	91109-7214	1-877-339-3973
20450	FANTASTIC FENCE, INC.	1900 SPRING CITY	REDWOOD	CA	94063	1-408-730-1539

VENDER CONTACT LIST

21560	FOUR WHEEL PARTS WHOLESALERS	550 W. SAN CARLOS	SAN JOSE	CA		1-510-436-4979
22000	GALL-S, INC.	P O BOX 55208	LEXINGTON	KY	40555-5208	1-800-477-7766
22008	ALFREDO GARCIA ROOFING	3504 OAK DRIVE	MENLO PARK	CA	94025	1-650-322-4402
22060	GARRETSON CONSTRUCTION	731 UPTON STREET	REDWOOD	CA	94061	1-650-364-9436
22438	GRAINGER	DIV. OF W.W. GRAINGER, INC. 1100 INDUSTRIAL RD. UNIT	SAN CARLOS	CA	94070	1-650-591-7200
22674	GRANITE ROCK, INC.	PO BOX 50001	WATSONVILLE	CA	95077-5001	1-831-768-2000
23295	GUY PLUMBING	1265 EL CAMINO	MENLO PARK	CA	94025	1-650-323-8415
23381	HALF MOON BAY GRADING & PAVING	1780 HIGGINS CANYON ROAD	HALF MOON BAY	CA	94019	1-650-726-3588
23970	HARBOR FREIGHT	3491 MISSION OAKS BLVD	CAMARILLO	CA	93011-6010	1-510-793-5425
24177	HARRINGTON PLASTIC	1100 INDUSTRIAL	SAN CARLOS	CA	94070	1-408-734-4470
24230	HARTY PIPELINES	4085 19TH AVENUE	SAN	CA	94132	1-415-585-6023
24684 misc	HOME DEPOT					1-800-504-9128
24730	HOWARD'S SMALL ENGINE REPAIR	801 ARGUELLO ST P O BOX 1057	REDWOOD CITY	CA	94064-1057	1-650-368-1136
24797	HYDRAULIC CONTROLS	PO BOX 8157	EMERYVILLE	CA	94662	1-510-658-8300
24814	IDEAL DRYING, INC.	432 N. CANAL STREET SUITE #16	SOUTH SAN FRANCISCO	CA	94080	1-650-873-3229
25281	INTERSTATE GRADING & PAVING	128 SOUTH MAPLE AVENUE	SOUTH SAN FRANCISCO	CA	94080-6302	1-650-952-7333
27628	LYNGSO GARDEN MATERIALS, INC	19 SEAPORT BLVD.	REDWOOD CITY	CA	94063	1-650-364-1730
28950	MENLO CHEVRON	1200 EL CAMINO	MENLO PARK	CA	94025	1-650-323-4239
29400	MENLO PARK HARDWARE CO. #14016	700 SANTA CRUZ AVE.	MENLO PARK	CA	94025	1-650-327-7222
29754	MENLO PARK POLICE DEPT.	701 LAUREL STREET	MENLO PARK	CA	94025	1-650-330-6300
30210	MILLER PIPELINE CORP.	P.O. BOX 34141	INDIANAPOLIS	IN	46234	1-317-203-0278
30344	MISSION CLAY PRODUCTS	P.O. BOX 1839	CORONA	CA	91718-1839	1-510-568-0800
30350	MISSION VALLEY FORD	780 EAST BROKAW	SAN JOSE	CA	95112-1007	1-408-933-2300
30715	MOREALI ELECTRIC	C10#629296 478 STOCKTON AVE.	SAN JOSE	CA	95126	1-408-271-5072
31918	NICHOLS DIAMOND TOOL, INC	2625 FAIR OAKS AVE	REDWOOD	CA	94063	1-650-364-6088
32535	OMEGA INDUSTRIAL SUPPLY, INC.	4950-B FULTON DRIVE	FAIRFIELD	CA	94534-1615	1-707-864-8164
32724	ORCHARD SUPPLY HARDWARE	P.O. BOX 49016	SAN JOSE	CA	95161-9016	1-888-746-7674
33249	NORTHERN TOOL & EQUP CO.	P O BOX 1219	BURNSVILLE	MN	55337-0219	1-952-894-0326
33540	PACIFIC PIPE COMPANY	PO BOX 23711	OAKLAND	CA	94623	1-510-537-0182
33800	PALO ALTO HARDWARE	875 ALMA STREET	PALO ALTO	CA	94301	1-650-327-7222
33797	PALMER ELECTRIC, INC	801-C AMERICAN	SAN CARLOS	CA	94070	1-650-592-7171
34320	PENINSULA TREE CARE	1654 WOLFE DRIVE	SAN MATEO	CA	94402	1-650-593-9367
35054	PLANET AUTO REPAIR & MUFFLERS	301 EL CAMINO REAL	MENLO PARK	CA	94025	1-650-328-0287
36680	R & L CONSTRUCTION	3863 ALAMEDA DE LAS PULGAS	MENLO PARK	CA	94025	1-650-323-1424
36704	R & S ERECTION NORTH PENINSULA	133 SOUTH LINDEN AVE	SOUTH SAN FRANCISCO	CA	94080	1-650-966-1800
36780	RANGER PIPELINES	P O BOX 24109	SAN	CA	94124	1-415-822-3700
37187	REDWOOD GENERAL TIRE SERVICE	1630 BROADWAY	REDWOOD CITY	CA	94063	1-650-369-0351

VENDER CONTACT LIST

37210	REDWOOD PLUMBING	1590 TACOMA WAY	REDWOOD CITY	CA	94063	1-650-369-1793
37356	RESCUE ROOTER	1479 BERGER DRIVE	SAN JOSE	CA	95112	1-866-800-3827
37510	ROBERTS & BRUNE CO	910 BERN COURT	SAN JOSE	CA	95112	1-650-366-3833
37810	ROTO-ROOTER	1205 CHRYSLER	MENLO PARK	CA	94025	1-877-729-7686
39340	SEWER EQUIP. CO OF AMERICA	1148 DEPOT STREET	GLENVIEW	IL	60025	1-847-729-3316
39510	SHAW PIPELINE INC.	5244 MISSION	SAN	CA	94112	1-415-337-0190
40120	SOUTH BAY TRUCK & EQUIPMENT	1677 LITTLE ORCHARD STREET	SAN JOSE	CA	95125-1002	1-408-493-9005
42230	TOOLAND, INC.	1369 INDUSTRIAL	SAN CARLOS	CA	94070	1-650-631-9636
42303	TRACTOR EQUIPMENT SALES	25886 CLAWITER R	HAYWARD	CA	94545	1-510-783-0430
42304	TRAILER HITCH INC.	3033 MIDDLEFIELD	REDWOOD	CA	94063	1-650-368-2125
42330	TRIPLE A PLUMBING	PO BOX 305	MOUNTAIN VIEW	CA	94042	1-650-366-6050
42435	UNITED RENTALS INC.	PO BOX 671400	DALLAS	TX	75267-1400	1-800-877-3687
43130	VALLEN SAFETY SUPPLY	P O BOX 200097	HOUSTON	TX	77216-0097	1-925-439-2287
43167	VANGUARD CLEANING SYSTEMS, INC	655 MARINERS ISLAND BOULEVARD SUITE 303	SAN MATEO	CA	94404	1-650-594-1500
43420	VICKERS CONCRETE SAWING, INC.	392 EAST GISH ROAD	SAN JOSE	CA	95112-4301	1-408-441-8820
45516	WECO INDUSTRIES, INC.	120 CORPORATE PLACE	VALLEJO	CA	94590	1-707-644-6661
45595	WEST MARINE		MOUNTAIN VIEW	CA		1-650-494-6660
45597	WEST VALLEY CONSTRUCTION	PO BOX 5639	SAN JOSE	CA	95150	1-408-371-5510
46435	ZANKER ROAD LANDFILL	625 CHARLES	SAN JOSE	CA	95112	1-408-263-2385

		Emergency By-Pass Equipment			
Item	Qty	Description	Total Footage	Equip. Location	Status
A	2	15'- Six Inch Discharge Hose w/cam locks			Inventory
B	3	6" Female to 4" male cam lock		Butler Bldg.	Inventory
C	12	6" Cam Lock Gaskets			Inventory
D	1	45 Degree, 6" Elbow w/ cam lock			Inventory
E	1	90 Degree, 6"elbow w/cam lock			Inventory
F	1	6" to 6" Cam Lock Coupler		Butler Bldg.	Inventory
G	5	6" Discharge Hose 50' Each	250'	Butler Bldg.	Inventory
H	1	6" Strainer		Butler Bldg.	Inventory
I	2	6" Flanges to 6" Male Cam Lock		Butler Bldg.	Inventory
J	2	6"-6" Male to Male Cam Lock		Butler Bldg.	Inventory
K	1	6" Suction Hose 12'	12'	Butler Bldg.	Inventory
L	1	6" Suction Hose 10'	10'	Butler Bldg.	Inventory
M	12	4" Cam Lock Gaskets			Inventory
N	1	45 Degree, 4"Elbow w/ cam lock			Inventory
O	1	90 Degree, 4"elbow w/cam lock			Inventory
P	1	4"-4" Male to Male Cam Lock		Butler Bldg.	Inventory
Q	1	4" Strainer		Butler Bldg.	Inventory
R	2	6" Flange to 4" Male Cam Lock		Butler Bldg.	Inventory
S	2	5'- Four Inch Discharge Hose w/cam locks	10'		Inventory
T	2	10'- Four Inch Discharge Hose w/cam locks	20		Inventory
U	8	4" Discharge Hose 50' each	400'	Butler Bldg.	Inventory
V	2	4" Suction hose 25' each	50'	Butler Bldg.	Inventory
W	12	3" Cam Lock Gaskets			Inventory
X	1	3" Flange # 150 x 4" Female Cam Lock			Inventory
Y	1	3" Thread – 3" Male Cam Lock		Butler Bldg.	Inventory
Z	2	3" Discharge Hose 50' each	100'	Butler Bldg.	Inventory
A1	1	3" Discharge Hose 25' each	25	Butler Bldg.	Inventory
B1	1	6" Trash Pump Trailer Mounted		Butler Bldg.	Inventory
*B2	1	4" Trash Pump (Portable) Tsurumi		Butler Bldg.	Inventory
C1	*1*	**4" Trash Pump (Portable) Yamaha*	**Out of Service*	*Butler Bldg.*	**Inventory*
D1	1	3" BIBO Dewater Pump 110v		Butler Bldg.	Inventory
E1	1	230v 3Phase 25kw Generator w/4"BIBO Dewater Pump Trailer Mounted w/float control panel		Butler Bldg.	Inventory
F1	1	Yamaha 1kW Generator		Corp. Yard	Inventory
G1	1	Yamaha 6kW Generator		Corp. Yard	Inventory
H1	2	Tripod Lights		Corp. Yard	Inventory
I1	3	GFI 4-plug outlets		Corp. Yard	Inventory

Appendix D
Design & Performance Provisions Element
Supporting Documents

Appendix D Documents

1. Town of Los Altos Hills Sanitary Sewer Construction Notes
2. Town of Los Altos Hills General Notes
3. Standard Details
4. Refer to the Legal Authority appendix (Appendix B) for the standard specifications, included in the Municipal Code

Appendix D – Document 1
Town of Los Altos Hills Sanitary Sewer Construction Notes

Town of Los Altos Hills
Sanitary Sewer Construction Standards

GENERAL NOTES

1. All References to "Town" in these general notes shall mean Town of Los Altos Hills Public Works Department.
2. All sanitary sewer workmanship and materials shall conform to requirements of current Town Standard Details, Construction Standards, and the City Engineer.
3. The approval of these plans by the Town shall be interpreted to mean that the sanitary sewer design shown on these plans meets the Town's Standards. The Town's approval in no way guarantees any other aspect of this plan or its accuracy relative to actual field conditions.
4. The City Engineer is authorized to require modifications during construction.
5. The contractor shall contact the Town at 650-941-7222, two (2) working days in advance of beginning any sanitary sewer work. The contractor shall thereafter keep the Town Inspector informed of his schedule for sanitary sewer work.
6. Prior to commencement of excavation work, the contractor shall contact all utility companies by calling Underground Service Alert (USA) at 1-800-227-2600 at least forty-eight (48) hours prior to start of construction.
7. The contractor shall field verify the location of all utilities before beginning any excavation.
8. The contractor shall obtain any and all permits required by the Town before beginning any sanitary sewer work.
9. Contractor shall obtain encroachment permit prior to any work in the Town right-of-way. A pre-construction meeting is required with the Public Works Department.
10. Applicant shall provide sufficient deposit to the Town for inspection, testing, community outreach, staff time, arborist, traffic consultants, safety specialist and other services as determined by the City Engineer. Any outstanding deposit shall be paid in full prior to final sign off.
11. Sewer connection permits shall be issued by the Town for all proposed new connections.
12. Existing sanitary sewer service shall be maintained at all times. The contractor shall use whatever means necessary (e.g. pumps, bypass lines, etc.) to maintain this service during construction.
13. Prior to commencing any sanitary sewer work in easements, the contractor shall provide the Town with adequate evidence that all affected property owners (and tenants where applicable) were notified forty-eight (48) hours prior to the date of work and that they have updated that notice in a timely manner when those dates have changed.
14. All sanitary sewer work constructed without inspection by the Town shall be removed and reconstructed with inspection.
15. All sanitary sewer laterals shall be 4" PVC-SDR 26 or approved equal, one per lot and marked with the letter 'S' on a post per Town's standards.
16. Sewer mains shall be minimum of 8" PVC-SDR 26 or approved equal and have (a) 1% minimum slope or as approved by the City Engineer, and (b) minimum self-cleaning velocity of 2 feet per second.
17. Sewer laterals shall be a minimum of 4' below top of curb or finished ground at property line unless authorized by the City Engineer.
18. The contractor shall be responsible for verifying the elevation of all existing storm drains and sewers to be extended or connected prior to commencing work.
19. Traffic Control Plan shall be prepared by a licensed Traffic Engineer. Traffic Control Plan shall be in accordance with Town's construction standards and subject to review and approval of the City Engineer prior to permit issuance.
20. Two open traffic lanes are required during all non-working hours. One travel lane may be closed during work hours when flaggers are present.

21. Sewer trenches and permanent pavement within right-of-way and/or easements shall conform to Town's Standard Detail UT-1 and UT-2.
22. The contractor shall place temporary form fitting pieces of plywood or other suitable material over the bottoms of the manholes to prevent entry of foreign materials from the manhole to the pipe.
23. No open trenches in the street right-of-way will be allowed overnight. All trenches shall be backfill the same day the trench was excavated, except that portion of the trench or excavation to be used for connecting the extension of the installation. That said portion shall be adequately barricaded and protected to the satisfaction of the City Engineer or his representative. Excavations or trenches for poured in place concrete manhole may remain open for a period not to exceed seven days, providing said excavation or trenches are adequately barricaded, fenced, and plated with skid resistant steel plate of adequate thickness and flushed with pavement. The number of plates to be utilized each day shall be approved by the City Engineering or his representative.
24. All utility frames and covers, existing and proposed monuments, shall be brought to finish grade after finished paving.
25. 'Tracer Wire' shall be installed along the top of the pipe for all sections of the sewer line. The wire shall be solid copper AWG #10 with an insulated jacket. Detector tape shall also be installed within top 12" of pavement.
26. Sanitary sewer mains shall be flushed, mandreled, air tested, and video taped in accordance with Town's testing and retesting requirements.
27. Contractor shall submit video inspection CD/DVD to the Town for review and approval of the City Engineer prior to acceptance of the sewer main. The Contractor shall be responsible for repairing any defective sections observed in the video inspection to City engineer's satisfaction.
28. In areas where the existing road pavement is trenched for installation of the sewer main, contractor shall restore the pavement per Town of Los Altos Hills Standards. If the trench is more than 300 feet long, the street shall be slurry sealed. In the case where slurry seal is not suitable as determined by the Town, a fee may be required prior to permit issuance.
29. An as-built mylar plan, consists of locations of all sewer main and lateral wyes in the main trunk with reference to manholes, shall be submitted prior to acceptance of the improvements.
30. The Town is not responsible for cleaning private sewer laterals. The property owner is fully responsible for maintenance, repair, and replacement of the (a) lateral from the house to the main including wye connection at the main, (b) overflow, and (c) backflow devices.
31. All works to be done to the satisfaction of the City Engineer.
32. Include signature blocks, where applicable, for the following agencies:
    a. Town of Los Altos Hills Public works director:

APPROVED AS TO COMPLLIANCE WITH TOWN OF LOS ALTOS HILLS REQUIREMENTS		
_____		
Richard Chiu, Jr., Public Works Director	C.E. 55414	DATE
Town of Los Altos Hills	EXP. 12-31-12	

    b. Purissima Hills Water district:

Approved by	
_____	
Purissima Hills Water District	date

c. California Water Service Company

These plans have been reviewed for general conformance with California Water Service Company Standards.
California Water Service Company Date

PIPES AND FITTINGS

Polyvinyl Chloride Pipe (PVC)

1. All pipe and fittings shall conform to ASTM Specifications D3034, SDR 26.
2. All joints shall be a bell and spigot assembly with elastomeric sealing gaskets sealing gaskets shall meet the requirements of ASTM Specification D1869, Solvent Cement joins are not permitted.
3. All pipes entering or leaving a concrete structure shall have a rubber waterstop gasket attached to it. The waterstop gasket shall conform to the pipe manufacturer's specifications. The waterstop gasket shall be sealed firmly around the pipe exterior and be cast into the concrete structure.
4. All pipe joints shall be made using manufactured PVC couplings. Band type compression couplings are not permitted, except repairs. Fernco or equivalent.

Vitrified Clay Pipe (VCP)

5. Pipe and fitting shall be extra strength, unglazed, bell and spigot, conforming to the latest version of ASTM Specification C700.
6. Joints shall be a bell and spigot assembly with factory installed flexible compression type gaskets made of plasticized polyvinyl or polyurethane conforming to the latest revision of ASTM specifications C425.

TESTING REQUIREMENTS

1. All references to the "Town" in these testing requirements shall mean the appropriate town of Los Altos Hills Public Works Department.
2. All required cleaning and testing of sanitary sewer mains and laterals shall be performed in the presence of a Town representative.
3. All sanitary sewer mains being constructed shall be cleaned by means of a high speed jet rodder prior to testing.
4. All sanitary sewer line testing shall be done after trench backfilling but before paving.
5. All sanitary sewer mains being constructed shall pass a low pressure air test. Each section of main shall be tested between successive manholes. The low pressure test shall be conducted in the following manner:
   a. A compressed air supply shall be attached to an air fitting on the main and the air pressure within the line increased to five (5) pounds per square inch (PSI). After the air supply is securely turned off or disconnected, there shall be a two (2) minute waiting period before the actual test period begins to allow stabilization of air within the main.
   b. In no case shall the air pressure within the line be less than 4 PSI at the beginning of the test period. Refer to the chart which follows for the length of the test period. The minimum length of test is four (4) minutes. The allowable air pressure loss during the test period shall be 0.5 PSI. A written record of the test shall be submitted to the Public Works Department by the contractor.

Nominal Pipe Size (Inches)	Length of Line (feet)	Length of Test (minutes)
4	ALL	4
6	0 – 300	4
6	300 – 370	4 ½
6	370 and Greater	5
8	0 – 170	4
8	170 – 210	4 ½
8	210 – 250	5
8	250 – 290	5 ½
8	290 and Greater	5 ¾
10	0 – 110	4
10	110 – 165	5
10	165 – 215	6
10	215 and greater	6 ¾

6. A television inspection shall be made for all sanitary sewer main being constructed after all other cleaning and testing have been completed. Immediately prior to televising the sewer, an amount of water acceptable to the Town's representative shall be introduced into the sewer main being inspected. When televised inspection is used to check for sag, a calibrated device acceptable to the engineer shall be used to measure the depth of sag.

   A video tape in CD/DVD format at SP or equivalent, speed shall be made of the inspection and delivered along with a typed log of the inspection to the Town's Public Works Department for review and acceptance.

   Submitted video shall include a continuous on-screen display which contains, as a minimum, the date of the filming, identification of the line and segment (reach) of the line being viewed, and readout, in feet, showing the distance to the entry point.

If, in the opinion of the Town, the submitted video tapes are of poor quality, the Town may reject the video tapes and require the video inspection to be repeated and new video tapes submitted to the Town for review and acceptance. All video tapes shall become the property of the Town.

The following observations shall be considered defects in the new construction of the sewer pipelines and will require corrections, retesting, and re-televising prior to considering of acceptance:

a. Standing water (sag) over 1/8".
b. Offgrade - 0.08 foot, or over, deviation from grade;
c. Joint separations - over 3/4";
d. Offset joints;
e. Chips in pipe ends - none more than 1/4"deep;
f. Cracked or damaged pipe or evidence of the presence of all external object bearing upon the pipe (rocks, roots, etc.);
g. Infiltration;
h. Debris or other foreign objects;
i. Other obvious deficiencies when compared to Approved Plans and Specifications, these Standards and Standard Drawings.

7. Deflection testing of PVC sewer mains shall be performed after the placement of all trench backfill. Pipe deflection shall be tested by pulling by hand a go/no-go mandrel through the installed sections of sewer main.

   The mandrel used shall have a minimum length equal to its diameter. The mandrel shall be constructed with a minimum of nine (9) ribs fabricated parallel to its longitudinal axis. Both the design of the mandrel and the fabricated mandrel itself shall be inspected by the Town well in advance of the deflection test.

   The mandrel diameter shall be 95% of the pipe's average inside diameter as defined by ASTM Specification D3034, and as detailed in the following table:

Nominal Pipe Size (inches)	Average Inside Diameter (inches)	Minimum Mandrel Diameter (inches)
6	5.893	5.598
8	7.891	7.497
10	9.864	9.371

Note: Average inside diameter = average outside diameter – 2(1.06)T, where T = minimum wall thickness as defined by ASTM Specification D3034.

8. Tolerance of Sags in PVC Sanitary Sewer Pipe:

PIPE DIAMETER (INCHES)	MAXIMUM ALLOWABLE DEPTH (D) OF SAG	MAXIMUM ALLOWABLE LENGTH (L) OF SAG	MINIMUM ALLOWABLE DISTANCE (X) BETWEEN SAGS
4”	NONE	NONE	NONE
6”	NONE	NONE	NONE
8”	1/8”	4 FT	40 FT
10”	1/8”	6 FT	60 FT
12” AND LARGER	1/8”	8 FT	80 FT

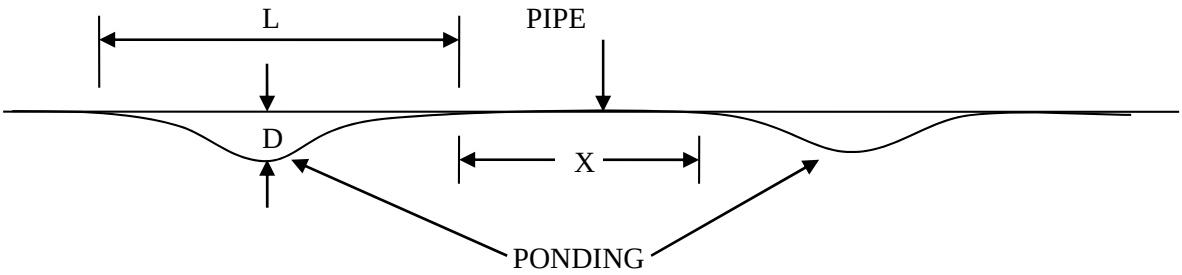

Any sags or ponding of water along the pipe will be repaired by excavation of the pipe, realigning and compacting the subgrade or relaying the non-conforming section of pipe if necessary.

a. The maximum allowable depth of ponding water in sewer pipes: 1/8”.
b. Ponding water in excess of the allowable tolerance will be cause for rejection.
c. Any defects in the pipe or construction method revealed shall be corrected and re-televised for Town’s review, approval, and acceptance.

9. Retesting
Each sanitary sewer pipe shall be retested at a date between eighteen (18) months and twenty-one (21) months from the date of acceptance of that pipe by the Contractor. The line shall be cleaned, mandrelled and televised in the manner specified herein for newly installed pipe. If the retesting reveals any defects due to faulty materials or workmanship, the Contractor shall repair or replace the defective structures to meet all requirements of Town standards including the testing criteria required for acceptance by the Town. Television inspection shall be provided by the Town and be reimbursed by Contractor’s remaining deposit. All costs associated with retesting and the correction of defects shall be the responsibility of the Contractor.

10. Additional testing requirements and/or procedures may be required by the City Engineer and/or his representative.

11. All testing and retesting shall be done to the satisfaction of the City Engineer.

TRAFFIC CONTROL

1. The contractor shall provide for safe movement of vehicular, bicycle, equestrian, and pedestrian traffic through and around construction operations. Traffic control requirements set forth herein are the minimum requirements imposed. The contractor shall be solely responsible for providing all protective measures necessary.
2. Traffic Control Plans:
    a. Shall be prepared by a licensed Traffic Engineer to clearly describe proposed traffic control measures for vehicles, bicycles, equestrians, and pedestrians. The plans shall be generally in accordance with the illustration included in the Manual of Traffic Control.
    b. Shall provide a detailed approach for detours and to control traffic through the construction zone,
    c. Shall consist of scaled drawings for each situation anticipated to be encountered, i.e. intersections, mid-block (each during working and non-working hours), etc.
    d. Shall show signs, traffic control devices and flaggers as required.
    e. Shall conform to Caltrans and Town Standards,
    f. Are subject to review and approval of the City Engineer before construction begins.
3. Traffic Control Devices:
    a. General –
        i. Provide traffic control devices in sufficient quantities and types as required to provide safe and adequate traffic control
        ii. During hours of darkness, approved lights and/or flares shall be included, in proper working order, to illuminate signs and hazards and alert approaching traffic.
        iii. Provide and maintain barricades along all open trenches in contact with traffic.
        iv. No work may begin on any day or at any time before traffic control devices have been placed, test driven and, if required, adjusted and revised.
        v. Contractor shall install additional traffic control measures as required by the City Engineer or his representative.
    b. Cones or Delineators –
        i. Cones or Delineators shall consist of cylindrical or cone shaped plastic devices, which shall be 18-inch to 48-inche in height.
        ii. Cones or Delineators shall have a flexible base of suitable weight, which will ensure stability.
        iii. Cones used during hours of darkness shall be internally illuminated or reflectorized meeting the requirements of the Manual of Traffic Controls.
    c. Barricades –
        i. Barricades shall be Type I, Type II or Type III barricades as set forth in the Manual of Traffic Controls.
        ii. Barricades used during hours of darkness shall be equipped with flashers.
    d. Electronic message boards to be placed 14 days prior to start of work.
    e. Placement –
        i. Place all traffic control devices in accordance with the manual of Traffic controls and favorably reviewed Traffic Control Plan.
        ii. Adjust locations of devices to suit the conditions and circumstances of each detour situation. In all cases, place signs to most effectively convey their messages to approaching traffic.

f. Test Drive of Detour –
   i. Immediately after traffic control devices have been placed, the detour shall be test driven by the Contractor's representative.
   ii. Test drive shall include approach to the detour from each possible direction and traversing full length of each detour route.
   iii. The Contractor shall adjust and revise all traffic control devices as determined to be required by test drive through and shall repeat test drive if determined necessary by the City Engineer.
   iv. The Contractor shall provide additional traffic control devices if required to maintain flow of traffic through construction operation.

g. Maintenance of Devices –
   i. The Contractor shall maintain all traffic control devices, at proper locations and in proper working order, at all times during construction operation and whenever a hazard resulting from Contractor's operation exists.
   ii. The Contractor shall adjust and revise traffic control devices, placement, etc., to suit changing conditions around construction operations.

h. Removal of Devices –
   i. Traffic control device shall remain in place at all times required to alert approaching traffic of upcoming hazards.
   ii. After hazard has been removed, remove all traffic control devices. Remove signs or cover their messages.

4. Flaggers:
   a. General –
      i. The Contractor shall employ flaggers as required for each specific detour
      ii. The Contractor shall employ flaggers at all locations on a construction site where barricades and warning signs cannot control the moving traffic.
   b. Placement – where flaggers are required, they shall be logically placed in relation to the equipment or operation so as to give adequate warning and shall be placed approximately 100 feet ahead of impact point.
   c. Warning Signs –
      i. Place a warning sign ahead of the flagger reading: "Flagger Ahead." The distance between the sign and the flagger shall be based on the average traffic speed.
      ii. During hours of darkness, illuminate flagger stations such that the flagger will be clearly visible to approaching traffic. Lights for illuminating the flagger station shall be reviewed and approved by the City Engineer.
   d. Equipment –
      i. Provide flagger with a red or orange warning garment when flagging. Provide flaggers with approved hand signs and two-way radios for communication.
      ii. When flagging during hours of darkness, the flagger shall signal with a red light or flare and shall have a belt and suspender harness outside his garment fitted with reflectors or made from reflectorized cloth, unless the garment is well reflectorized in one of these ways.

5. Access to Private Property
   a. General – the Contractor shall schedule operations to minimize disruption of access to private properties.
   b. Notice to Residents – Prior to blocking access to any private driveway or parking lot entrance, the Contractor shall notify the resident or business owner or tenant of pending closure and allow resident to remove vehicles.

   c. Nights – during non-working hours no driveway, house or parking lot shall be denied access to a public roadway.
6. Notice to Agencies:
   a. The Contractor shall notify in writing all agencies having jurisdiction at least forty-eight (48) hours, excluding holidays and weekends, prior to instituting any lane closure or detour. At the end of each day's work, the Contractor shall inform the ambulance service, police, and fire departments of the status of all detours and/or lane or road closures that will be in effect the next day.
   b. List of Agencies:
      i. Town of Los Altos Hills
      ii. County Fire & Police Department
      iii. U.S. Postal Service
      iv. Ambulance Services
      v. Green Waste Recovery
7. Emergency Vehicle Access Through Detours:
   a. During construction I nor adjacent to roadways in the project site, Contractor shall maintain at least one lane open in each direction of the road to allow emergency vehicle access for police, fire and ambulance to the project vicinity.
   b. During all detours and/or street closures the Contractor shall provide for movement of emergency vehicles through the work area.
   c. It is essential that the Contractor's work and equipment does not impede egress from any fire or police station to other area of their service area.
8. Diverting Traffic:
   a. Diverting Pedestrian, Equestrian, and Bicyclist Traffic:
      i. Whenever construction operations obstruct the flow of pedestrian, equestrian, and/or bicycle traffic or present a hazard to pedestrians, horses, and bicyclists, the Contractor shall take appropriate action to protect and separate them from the work area.
      ii. Such action may include placement of barricades between pedestrians, horses, and bicyclists and work areas, placement of warning signs, and provision of personnel as required to protect pedestrians, horses, cyclists as conditions of warrant.
   b. Diverting Vehicular Traffic:
      i. Whenever construction operations obstruct the flow of vehicular traffic or present a hazard to vehicles operating in the vicinity of construction operations, the Contractor shall take appropriate action to warn, detour and otherwise protect approaching drivers and vehicles.
9. Parking Restrictions:
   a. General – The Contractor shall post approved "No Parking" signs at all location necessary to establish work areas and detour traffic
   b. Signs – signs shall be placed at least 24 hours in advance or restriction.
   c. Contractor shall provide his own staging areas.

PLATING AND TEMPORARY SURFACING

1. Trenches will be covered with plates which shall be flushed with existing pavement and skid resistant.

2. The temporary surfacing shall be Class 2 aggregate base as specified in Section 26 of the Standard Specifications. The aggregate base shall be equal in depth to the existing pavement structural section, but in any case not less than eighteen (18") inches in depth. The aggregate base shall be brought within one (1") inch of the top of the existing paving and covered with temporary "cold mix" asphalt paving using an MC-250, MC-800 or approved equal. All temporary surfacing shall be installed the same day as backfilling and shall be level with the existing paving.

   The Contractor shall maintain the temporary surfacing level with the existing paved surface at all times. All dirt and gravel and debris of any kind shall be removed from Town streets by the end of the day. All temporary asphalt shall comply fully with the Bay Area Air Quality Management District's Regulation 8, Rule 15.

   Section 302 of Rule 15 prohibits the use of "cut back" asphalt (including MC-70) during the months of April through October in paving material or in paving and maintenance operations. The Contractor shall use only slow-cure (SC) liquid asphalts for temporary trench paving during April through October.

   In the event the Contractor does not comply fully with the above requirements, no further excavation will be permitted until the requirements are met.

3. All work shall be done to the satisfaction of the City Engineer.

Appendix D – Document 2
Town of Los Altos Hills General Notes

Revised on 7/1/2014

Town of Los Altos Hills
Standard Specifications and Notes

GENERAL NOTES

1. ALL WORK AND MATERIAL SHALL BE IN ACCORDANCE WITH THE FOLLOWING:

    A. APPLICABLE SECTIONS OF THE STATE OF CALIFORNIA DEPARTMENT OF TRANSPORATION STANDARD SPECIFICATIONS, LATEST EDITION, HEREIN REFERRED TO AS 'CALTRANS'.
    B. TOWN OF LOS ALTOS HILLS AND COUNTY OF SANTA CLARA STANDARD SPECIFICATIONS AND DETAILS FOR PUBLIC WORKS CONSTRUCTION, WHERE APPLICABLE.
    C. STANDARDS OF THE UNITED STATES DEPARTMENT OF LABOR OCCUPATIONAL SAFETY AND HEALTH ADMINISTRATION, OFFICE OF STANDARDS AND RULES OF THE STATE OF THE STATE DIVISION OF INDUSTRIAL SAFETY.

2. IT IS THE RESPONSIBLILTY OF THE CONTRACTOR TO SECURE ALL PERMITS NECESSARY TO PERFORM WORK, INCLUDING BUT NOT LIMIT TO WORK IN THE PUBLIC RIGHT-OF-WAY, GRADING, TREE REMOVAL, AND UTILITY MODIFICATIONS.

3. CONTRACTOR SHALL SUPPLY ALL EQUIPMENT, LABOR AND MATERIALS NECESSARY TO PERFORM THE WORK SHOWN ON THE PLANS.

4. IT SHALL BE THE RESPONSIBILITY OF THE VARIOUS CONTRACTORS TO COORDINATE THEIR WORK SO AS TO ELIMINATE CONFLICTS AND WORK TOWARD THE GENERAL GOOD AND COMPLETION OF THE ENTIRE PROJECT.

5. ALL WORKMANSHIP AND MATERIALS FURNISHED BY THE CONTRACTOR SHALL BE THE KIND AND QUALITY DESCRIBED IN THE SPECIFICATIONS AND SHALL BE FIRST CLASS THROUGHOUT. NEITHER FINAL ACCEPTANCE NOR FINAL PAYMENT BY OWNER SHALL RELIEVE THE CONTRACTOR OF RESPONSIBILITY FOR FAULTY MATERIALS OR WORKMANSHIP.

6. IN THE EVENT OF ANY CONFLICT OF INFORMATION SHOWN ON THESE PLANS OR ANY CONFLICT BETWEEN THESE PLANS AND THE INTENT OF A CONSISTENT AND FUNCTIONAL PRODUCT, THE CONTRACTOR SHALL SO NOTIFY THE OWNER/ENGINEER IN WRITING, UPON WHICH NOTICE THE OWNER/ENGINEER SHALL RESOLVE THE CONFLICTS BY THE ISSUANCE OF A WRITTEN ORDER, REVISED PLANS OR BOTH. THE CONTRACTOR SHALL BEAR FULL COST AND RESPONSIBILITY FOR WORK AFFECTED BY SUCH CONFLICTS AND PERFORMED BY THE CONTRACTOR PRIOR TO SUCH NOTICE TO THE OWNER AND ISSUANCE OF SUCH ORDER AND/OR REVISED PLANS.

7. CONTRACTOR SHALL PROVIDE ADEQUATE DUST CONTROL AT ALL TIMES AS REQUIRED BY OWNER'S AND TOWN'S REPRESENTATIVES. NO VISIBLE AIRBORNE PARTICLES WILL BE ALLOWED AT ANY TIME DURING CONSTRUCTION.

8. CONTRACTOR SHALL EXERCISE ALL NECESSARY CAUTION TO AVOID DAMAGE TO ANY EXISTING TREES, OR SURFACE IMPROVEMENTS OR TO ANY EXISTING DRAINAGE STRUCTURE, WATER STRUCTURE, SEWER CLEANOUTS, MANHOLES, OR JUNCTION BOXES FOR UNDERGROUND ELECTRIC, GAS TELEPHONE, CABLE TV, STORM, SANITARY, WATER, OR UTILITY POLES, STREET SIGNS, OR OTHER

UTILITIES WHICH ARE TO REMAIN IN PLACE AND SHALL BEAR FULL COST AND RESPONSIBILITY FOR ANY DAMAGE THERETO.

9. ALL KNOWN EXISTING UTILITY LINES ARE SHOWN FOR INFORMATION ONLY. CONTRACTOR SHALL EXERCISE ALL NECESSARY CAUTION TO AVOID DAMAGE TO ANY EXISTING UTILITY LINES OR FACILITIES TO REMAIN IN PLACE, WHETHER FOR UNDERGROUND ELECTRIC, GAS, TELEPHONE, CABLE TV, STORM, SANITARY, WATER, OR OTHER UTILITIES WHICH ARE TO REMAIN IN PLACE AND SHALL BEAR FULL COST AND RESPONSIBILITY FOR ANY DAMAGE THERETO.

10. CONTRACTOR SHALL CONTACT BOTH UNDERGROUND SERVICE ALERT (USA) (800-227-2600) AND THE AFFECTED UTILITY COMPANIES PRIOR TO STARTING WORK TO REQUEST AND OBTAIN THE MARKING OF EXISTING UNDERGROUND UTILITIES.

11. CONTRACTOR SHALL PROVIDE ALL GRADE STAKES IN ADDITION TO ANY FURNISHED BY ENGINEER AS REQUIRED TO COMPLETE THE PROJECT TO THE LINES AND GRADES SHOWN ON THE PLANS.

12. INSPECTION OF WORK: THE TOWN OF LOS ALTOS HILLS ENGINEERING DEPARTMENT OR ITS REPRESENTATIVE WILL INSPECT ALL WORK WITHIN THE PUBLIC RIGHT-OF-WAY AND EASEMENTS.

13. ENGINEER SHALL BEAR NO RESPONSIBILITY FOR METHODS AND PROCEDURES OF WORK ESTABLISHED BY CONTRACTOR, JOB SITE CONDITIONS, JOB SAFETY OR CONFORMANCE WITH SAFETY PROCEDURES AND REQUIREMENTS.

14. IN CONFORMANCE WITH GENERALLY ACCEPTED CONSTRUCTION PRACTICES, THE CONTRACTOR SHALL ASSUME SOLE AND COMPLETE RESPONSIBILITY FOR THE JOB SITE CONDITIONS DURING THE COURSE OF CONSTRUCTION OF THE PROJECT, INCLUDING SAFETY OF ALL PERSONS AND PROPERTY. THIS REQUIREMEMT SHALL APPLY CONTINUOUSLY AND SHALL NOT BE LIMITED TO NORMAL WORKING HOURS. THE CONTRACTOR SHALL INDEMNIFY AND HOLD HARMLESS BOTH THE OWNER AND ENGINEER FROM ANY AND ALL LIABILITY REAL OR ALLEGED IN CONNECTION WITH THE PERFORMANCE OF THE WORK ON THIS PROJECT, EXCEPTING LIABILITY ARISING FROM SOLE NEGLIGENCE OF THE OWNER OR ENGINEER.

15. NO STREET CLOSURE SHALL BE ALLOWED.

16. CONSTRUCTION HOURS SHALL BE LIMITED TO MONDAY THOUGH FRIDAY, 8:00 A.M. TO 5:00 P.M. WORK WILL NOT BE PERMITTED ON WEEKENDS, AFTER HOURS OR HOLIDAYS. ANY EXCEPTIONS MUST BE REQUESTED BY CONTRACTOR IN WRITING AND APPROVED IN WRITING BY THE ENGINEER. THE FOLLOWING ARE THE DESIGNATED TOWN HOLIDAYS:

    A. JANUARY 1 (NEW YEAR'S DAY)
    B. THE THIRD MONDAY IN JANUARY (MARTIN LUTHER KING'S BIRTHDAY)
    C. THE THIRD MONDAY IN FEBRUARY (PRESIDENT’S DAY)
    D. THE LAST MONDAY IN MAY (MEMORIAL DAY)
    E. JULY 4 (INDEPENDENCE DAY)
    F. THE FIRST MONDAY IN SEPTEMBER (LABOR DAY)
    G. NOVEMBER 11 (VETERANS' DAY)

H. THE SECOND MONDAY IN OCTOBER (COLUMBUS DAY)
I. THE FOURTH THURSDAY IN NOVEMBER (THANKSGIVING DAY)
J. THE DAY AFTER THANKSGIVING DAY
K. DECEMBER 24 (CHRISTMAS EVE)
L. DECEMBER 25 (CHRISTMAS DAY)

17. A DETAILED TRAFFIC CONTROL PLAN SHALL BE PREPARED BY A CALIFORNIA LICENSED TRAFFIC ENGINEER OR CIVIL ENGINEER WITH ADEQUATE EXPERIENCES AND SUBMITTED TO THE ENGINEER FOR REVIEW AND APPROVAL PRIOR TO START OF CONSTRUCTION.

18. A CONSTRUCTION STAGING AND EQUIPMENT STORAGE AREA SHALL BE DESIGNATED BY THE CONTRACTOR AND APPROVED BY THE ENGINEER PRIOR TO THE START OF CONSTRUCTION. ALL PARKING OF CONTRACTOR'S AND WORKERS' VEHICLES SHALL BE OFF THE ROADWAY AND PATHWAY AND CONFORM TO APPLICABLE LAWS. AT THE REQUEST OF PROPERTY OWNERS, ANY VEHICLES SHALL BE PROMPTLY MOVED.

19. CONTRACTOR SHALL PROVIDE ADEQUATE WATER POLLUTION CONTROL MEASURES PER THE PROJECT SPECIFICATIONS AND MODIFY AT THE REQUEST OF TOWN'S REPRESENTATIVE.

20. CONTRACTOR SHALL NOTIFY COUNTY COMMUNICATIONS 48 HOURS PRIOR TO ANY CONSTRUCTION ACTIVITIES AFFECTING EMERGENCY RESPONSE. CONTRACTOR SHALL COORDINATE WITH MAIL CARRIER AND TRASH HAULERS FOR ANY CONSTRUCTION AFFECTING THEIR OPERATIONS.

21. PEDESTRIAN, BICYCLIST, AND EQUESTRIAN ACCOMMODATION SHALL BE PROVIDED BY THE CONTRACTOR AT ALL TIMES.

TRAFFIC CONTROL

1. THE CONTRACTOR SHALL PROVIDE FOR SAFE MOVEMENT OF VEHICULAR, BICYCLE, EQUESTRIAN, AND PEDESTRIAN TRAFFIC THROUGH AND AROUND CONSTRUCTION OPERATIONS. TRAFFIC CONTROL REQUIREMENTS SET FORTH HEREIN ARE THE MINIMUM REQUIREMENTS IMPOSED. THE CONTRACTOR SHALL BE SOLELY RESPONSIBLE FOR PROVIDING ALL PROTECTIVE MEASURES NECESSARY.

2. TRAFFIC CONTROL PLANS:
   A. SHALL BE PREPARED BY A LICENSED TRAFFIC ENGINEER TO CLEARLY DESCRIBE PROPOSED TRAFFIC CONTROL MEASURES FOR VEHICLES, BICYCLES, EQUESTRIANS, AND PEDESTRIANS. THE PLANS SHALL BE GENERALLY IN ACCORDANCE WITH THE ILLUSTRATION INCLUDED IN THE MANUAL OF TRAFFIC CONTROL.
   B. SHALL PROVIDE A DETAILED APPROACH FOR DETOURS AND TO CONTROL TRAFFIC THROUGH THE CONSTRUCTION ZONE,
   C. SHALL CONSIST OF SCALED DRAWINGS FOR EACH SITUATION ANTICIPATED TO BE ENCOUNTERED, I.E. INTERSECTIONS, MID-BLOCK (EACH DURING WORKING AND NON-WORKING HOURS), ETC.
   D. SHALL SHOW SIGNS, TRAFFIC CONTROL DEVICES AND FLAGGERS AS REQUIRED.
   E. SHALL CONFORM TO CALTRANS AND TOWN STANDARDS,
   F. ARE SUBJECT TO REVIEW AND APPROVAL OF THE CITY ENGINEER BEFORE CONSTRUCTION BEGINS.

3. TRAFFIC CONTROL DEVICES:
   A. GENERAL –
      i. PROVIDE TRAFFIC CONTROL DEVICES IN SUFFICIENT QUANTITIES AND TYPES AS REQUIRED TO PROVIDE SAFE AND ADEQUATE TRAFFIC CONTROL.
      ii. DURING HOURS OF DARKNESS, APPROVED LIGHTS AND/OR FLARES SHALL BE INCLUDED, IN PROPER WORKING ORDER, TO ILLUMINATE SIGNS AND HAZARDS AND ALERT APPROACHING TRAFFIC.
      iii. PROVIDE AND MAINTAIN BARRICADES ALONG ALL OPEN TRENCHES IN CONTACT WITH TRAFFIC.
      iv. NO WORK MAY BEGIN ON ANY DAY OR AT ANY TIME BEFORE TRAFFIC CONTROL DEVICES HAVE BEEN PLACED, TEST DRIVEN AND, IF REQUIRED, ADJUSTED AND REVISED.
      v. CONTRACTOR SHALL INSTALL ADDITIONAL TRAFFIC CONTROL MEASURES AS REQUIRED BY THE CITY ENGINEER OR HIS REPRESENTATIVE.

   B. CONES OR DELINEATORS –
      i. CONES OR DELINEATORS SHALL CONSIST OF CYLINDRICAL OR CONE SHAPED PLASTIC DEVICES, WHICH SHALL BE 18-INCH TO 48-INCH IN HEIGHT.
      ii. CONES OR DELINEATORS SHALL HAVE A FLEXIBLE BASE OF SUITABLE WEIGHT, WHICH WILL ENSURE STABILITY.
      iii. CONES USED DURING HOURS OF DARKNESS SHALL BE INTERNALLY ILLUMINATED OR REFLECTORIZED MEETING THE REQUIREMENTS OF THE MANUAL OF TRAFFIC CONTROLS.

C. BARRICADES –
   i. BARRICADES SHALL BE TYPE I, TYPE II OR TYPE III BARRICADES AS SET FORTH IN THE MANUAL OF TRAFFIC CONTROLS.
   ii. BARRICADES USED DURING HOURS OF DARKNESS SHALL BE EQUIPPED WITH FLASHERS.

D. ELECTRONIC MESSAGE BOARDS TO BE PLACED 14 DAYS PRIOR TO START OF WORK.

E. PLACEMENT –
   i. PLACE ALL TRAFFIC CONTROL DEVICES IN ACCORDANCE WITH THE MANUAL OF TRAFFIC CONTROLS AND FAVORABLY REVIEWED TRAFFIC CONTROL PLAN.
   ii. ADJUST LOCATIONS OF DEVICES TO SUIT THE CONDITIONS AND CIRCUMSTANCES OF EACH DETOUR SITUATION. IN ALL CASES, PLACE SIGNS TO MOST EFFECTIVELY CONVEY THEIR MESSAGES TO APPROACHING TRAFFIC.

F. TEST DRIVE OF DETOUR –
   i. IMMEDIATELY AFTER TRAFFIC CONTROL DEVICES HAVE BEEN PLACED, THE DETOUR SHALL BE TEST DRIVEN BY THE CONTRACTOR'S REPRESENTATIVE.
   ii. TEST DRIVE SHALL INCLUDE APPROACH TO THE DETOUR FROM EACH POSSIBLE DIRECTION AND TRAVERSING FULL LENGTH OF EACH DETOUR ROUTE.
   iii. THE CONTRACTOR SHALL ADJUST AND REVISE ALL TRAFFIC CONTROL DEVICES AS DETERMINED TO BE REQUIRED BY TEST DRIVE THROUGH AND SHALL REPEAT TEST DRIVE IF DETERMINED NECESSARY BY THE CITY ENGINEER.
   iv. THE CONTRACTOR SHALL PROVIDE ADDITIONAL TRAFFIC CONTROL DEVICES IF REQUIRED TO MAINTAIN FLOW OF TRAFFIC THROUGH CONSTRUCTION OPERATION.

G. MAINTENANCE OF DEVICES –
   i. THE CONTRACTOR SHALL MAINTAIN ALL TRAFFIC CONTROL DEVICES, AT PROPER LOCATIONS AND IN PROPER WORKING ORDER, AT ALL TIMES DURING CONSTRUCTION OPERATION AND WHENEVER A HAZARD RESULTING FROM CONTRACTOR'S OPERATION EXISTS.
   ii. THE CONTRACTOR SHALL ADJUST AND REVISE TRAFFIC CONTROL DEVICES, PLACEMENT, ETC., TO SUIT CHANGING CONDITIONS AROUND CONSTRUCTION OPERATIONS.

H. REMOVAL OF DEVICES –
   i. TRAFFIC CONTROL DEVICE SHALL REMAIN IN PLACE AT ALL TIMES REQUIRED TO ALERT APPROACHING TRAFFIC OF UPCOMING HAZARDS.
   ii. AFTER HAZARD HAS BEEN REMOVED, REMOVE ALL TRAFFIC CONTROL DEVICES. REMOVE SIGNS OR COVER THEIR MESSAGES.

4. FLAGGERS:
   A. GENERAL –
      i. THE CONTRACTOR SHALL EMPLOY FLAGGERS AS REQUIRED FOR EACH SPECIFIC DETOUR.
      ii. THE CONTRACTOR SHALL EMPLOY FLAGGERS AT ALL LOCATIONS ON A CONSTRUCTION SITE WHERE BARRICADES AND WARNING SIGNS CANNOT CONTROL THE MOVING TRAFFIC.

   B. PLACEMENT – WHERE FLAGGERS ARE REQUIRED, THEY SHALL BE LOGICALLY PLACED IN RELATION TO THE EQUIPMENT OR OPERATION SO AS TO GIVE ADEQUATE WARNING AND SHALL BE PLACED APPROXIMATELY 100 FEET AHEAD OF IMPACT POINT.

   C. WARNING SIGNS –
      i. PLACE A WARNING SIGN AHEAD OF THE FLAGGER READING: "FLAGGER AHEAD." THE DISTANCE BETWEEN THE SIGN AND THE FLAGGER SHALL BE BASED ON THE AVERAGE TRAFFIC SPEED.
      ii. DURING HOURS OF DARKNESS, ILLUMINATE FLAGGER STATIONS SUCH THAT THE FLAGGER WILL BE CLEARLY VISIBLE TO APPROACHING TRAFFIC. LIGHTS FOR ILLUMINATING THE FLAGGER STATION SHALL BE REVIEWED AND APPROVED BY THE CITY ENGINEER.

   D. EQUIPMENT –
      i. PROVIDE FLAGGER WITH A RED OR ORANGE WARNING GARMENT WHEN FLAGGING. PROVIDE FLAGGERS WITH APPROVED HAND SIGNS AND TWO-WAY RADIOS FOR COMMUNICATION.
      ii. WHEN FLAGGING DURING HOURS OF DARKNESS, THE FLAGGER SHALL SIGNAL WITH A RED LIGHT OR FLARE AND SHALL HAVE A BELT AND SUSPENDER HARNESS OUTSIDE HIS GARMENT FITTED WITH REFLECTORS OR MADE FROM REFLECTORIZED CLOTH, UNLESS THE GARMENT IS WELL REFLECTORIZED IN ONE OF THESE WAYS.

5. ACCESS TO PRIVATE PROPERTY
   A. GENERAL – THE CONTRACTOR SHALL SCHEDULE OPERATIONS TO MINIMIZE DISRUPTION OF ACCESS TO PRIVATE PROPERTIES.
   B. NOTICE TO RESIDENTS – PRIOR TO BLOCKING ACCESS TO ANY PRIVATE DRIVEWAY OR PARKING LOT ENTRANCE, THE CONTRACTOR SHALL NOTIFY THE RESIDENT OR BUSINESS OWNER OR TENANT OF PENDING CLOSURE AND ALLOW RESIDENT TO REMOVE VEHICLES.
   C. NIGHTS – DURING NON-WORKING HOURS NO DRIVEWAY, HOUSE OR PARKING LOT SHALL BE DENIED ACCESS TO A PUBLIC ROADWAY.

6. NOTICE TO AGENCIES:
   A. THE CONTRACTOR SHALL NOTIFY IN WRITING ALL AGENCIES HAVING JURISDICTION AT LEAST FORTY-EIGHT (48) HOURS, EXCLUDING HOLIDAYS AND WEEKENDS, PRIOR TO INSTITUTING ANY LANE CLOSURE OR DETOUR. AT THE END OF EACH DAY'S WORK, THE CONTRACTOR SHALL INFORM THE AMBULANCE SERVICE, POLICE, AND FIRE DEPARTMENTS OF THE STATUS OF ALL DETOURS AND/OR LANE OR ROAD CLOSURES THAT WILL BE IN EFFECT THE NEXT DAY.
   B. LIST OF AGENCIES:
      i. TOWN OF LOS ALTOS HILLS.
      ii. COUNTY FIRE & POLICE DEPARTMENT.

iii. U.S. POSTAL SERVICE.
iv. AMBULANCE SERVICES.
v. GREEN WASTE RECOVERY.

7. EMERGENCY VEHICLE ACCESS THROUGH DETOURS:
   A. DURING CONSTRUCTION IN OR ADJACENT TO ROADWAYS IN THE PROJECT SITE, CONTRACTOR SHALL MAINTAIN AT LEAST ONE LANE OPEN IN EACH DIRECTION OF THE ROAD TO ALLOW EMERGENCY VEHICLE ACCESS FOR POLICE, FIRE AND AMBULANCE TO THE PROJECT VICINITY.
   B. DURING ALL DETOURS AND/OR STREET CLOSURES THE CONTRACTOR SHALL PROVIDE FOR MOVEMENT OF EMERGENCY VEHICLES THROUGH THE WORK AREA.
   C. IT IS ESSENTIAL THAT THE CONTRACTOR'S WORK AND EQUIPMENT DOES NOT IMPEDE EGRESS FROM ANY FIRE OR POLICE STATION TO OTHER AREA OF THEIR SERVICE AREA.

8. DIVERTING TRAFFIC:
   A. DIVERTING PEDESTRIAN, EQUESTRIAN, AND BICYCLIST TRAFFIC:
      i. WHENEVER CONSTRUCTION OPERATIONS OBSTRUCT THE FLOW OF PEDESTRIAN, EQUESTRIAN, AND/OR BICYCLE TRAFFIC OR PRESENT A HAZARD TO PEDESTRIANS, HORSES, AND BICYCLISTS, THE CONTRACTOR SHALL TAKE APPROPRIATE ACTION TO PROTECT AND SEPARATE THEM FROM THE WORK AREA.
      ii. SUCH ACTION MAY INCLUDE PLACEMENT OF BARRICADES BETWEEN PEDESTRIANS, HORSES, AND BICYCLISTS AND WORK AREAS, PLACEMENT OF WARNING SIGNS, AND PROVISION OF PERSONNEL AS REQUIRED TO PROTECT PEDESTRIANS, HORSES, CYCLISTS AS CONDITIONS OF WARRANT.
   B. DIVERTING VEHICULAR TRAFFIC:
      i. WHENEVER CONSTRUCTION OPERATIONS OBSTRUCT THE FLOW OF VEHICULAR TRAFFIC OR PRESENT A HAZARD TO VEHICLES OPERATING IN THE VICINITY OF CONSTRUCTION OPERATIONS, THE CONTRACTOR SHALL TAKE APPROPRIATE ACTION TO WARN, DETOUR AND OTHERWISE PROTECT APPROACHING DRIVERS AND VEHICLES.

9. PARKING RESTRICTIONS:
   A. GENERAL – THE CONTRACTOR SHALL POST APPROVED "NO PARKING" SIGNS AT ALL LOCATION NECESSARY TO ESTABLISH WORK AREAS AND DETOUR TRAFFIC
   B. SIGNS – SIGNS SHALL BE PLACED AT LEAST 24 HOURS IN ADVANCE OR RESTRICTION.
   C. CONTRACTOR SHALL PROVIDE HIS OWN STAGING AREAS.

PLATING AND TEMPORARY SURFACING

1. TRENCHES WILL BE COVERED WITH PLATES WHICH SHALL BE FLUSHED WITH EXISTING PAVEMENT AND SKID RESISTANT.

2. THE TEMPORARY SURFACING SHALL BE CLASS 2 AGGREGATE BASE AS SPECIFIED IN SECTION 26 OF THE STANDARD SPECIFICATIONS. THE AGGREGATE BASE SHALL BE EQUAL IN DEPTH TO THE EXISTING PAVEMENT STRUCTURAL SECTION, BUT IN ANY CASE NOT LESS THAN EIGHTEEN (18") INCHES IN DEPTH. THE AGGREGATE BASE SHALL BE BROUGHT WITHIN ONE (1") INCH OF THE TOP OF THE EXISTING PAVING AND COVERED WITH TEMPORARY "COLD MIX" ASPHALT PAVING USING AN MC-250, MC-800 OR APPROVED EQUAL. ALL TEMPORARY SURFACING SHALL BE INSTALLED THE SAME DAY AS BACKFILLING AND SHALL BE LEVEL WITH THE EXISTING PAVING.

   THE CONTRACTOR SHALL MAINTAIN THE TEMPORARY SURFACING LEVEL WITH THE EXISTING PAVED SURFACE AT ALL TIMES. ALL DIRT AND GRAVEL AND DEBRIS OF ANY KIND SHALL BE REMOVED FROM TOWN STREETS BY THE END OF THE DAY. ALL TEMPORARY ASPHALT SHALL COMPLY FULLY WITH THE BAY AREA AIR QUALITY MANAGEMENT DISTRICT'S REGULATION 8, RULE 15.

   SECTION 302 OF RULE 15 PROHIBITS THE USE OF "CUT BACK" ASPHALT (INCLUDING MC-70) DURING THE MONTHS OF APRIL THROUGH OCTOBER IN PAVING MATERIAL OR IN PAVING AND MAINTENANCE OPERATIONS. THE CONTRACTOR SHALL USE ONLY SLOW-CURE (SC) LIQUID ASPHALTS FOR TEMPORARY TRENCH PAVING DURING APRIL THROUGH OCTOBER.

   IN THE EVENT THE CONTRACTOR DOES NOT COMPLY FULLY WITH THE ABOVE REQUIREMENTS, NO FURTHER EXCAVATION WILL BE PERMITTED UNTIL THE REQUIREMENTS ARE MET.

3. ALL WORK SHALL BE DONE TO THE SATISFACTION OF THE CITY ENGINEER.

Appendix D – Document 3
Town of Los Altos Hills Standard Details

Appendix D – Document 3
Town of Los Altos Hills Standard Details

TOWN OF LOS ALTOS HILLS

STANDARD DETAILS

STD. NO.	DETAILS	ADOPTED DATE
1	TYPICAL GEOMETRIC ROAD SECTION	12/7/2011
2	CUL DE SAC DETAIL	12/7/2011
3	STANDARD ROLLED CURB	12/7/2011
4	STANDARD ISLAND CURB	12/7/2011
5	STANDARD CONCRETE VALLEY GUTTER	12/7/2011
6	CATCH BASIN TYPE 1	12/7/2011
7	CATCH BASIN TYPE 2	12/7/2011
8	STANDARD CATCH BASIN HARDWARE	12/7/2011
9	DROP INLET TYPE 1	12/7/2011
10	DROP INLET TYPE 2	12/7/2011
11	HEADWALL TYPE “A”	12/7/2011
12	HEADWALL TYPE “B”	12/7/2011
13	HEADWALL TYPE “C”	12/7/2011
14	STANDARD SUBDRAIN	12/7/2011
15	ROADSIDE PATH (TYPE 2B)	12/7/2011
16	STREET NAME SIGN	12/7/2011
17	STREET MONUMENT	12/7/2011
18	STANDARD ROAD BARRICADE	12/7/2011
19	STREET SIGN	12/7/2011
20	PATHWAY HANDRAIL	12/7/2011
21	PATHWAY WATER BAR	12/7/2011
22	PATHWAY RETAINING WALL AND HANDRAIL	12/7/2011

23	**PLASTIC PIPE MANHOLE SIGN**	**12/7/2011**
24	**FILTER FABRIC DROP INLET SEDIMENT BARRIER**	**12/7/2011**
25	**SEDIMENT ROLL DETAIL**	**12/7/2011**
26	**VEGETATION CLEARING FOR PATHWAY**	**12/7/2011**
SS-1	**SANITARY SEWER MANHOLE**	**1/13/2011**
SS-2	**MANHOLE FRAME AND COVER**	**1/13/2011**
SS-3	**FLUSHING INLET**	**1/13/2011**
SS-4	**FLUSHING INLET FRAME AND COVER**	**1/13/2011**
SS-5	**SANITARY SEWER LATERAL**	**1/13/2011**
SS-6	**VERTICAL SEWER LATERAL CLEANOUT**	**1/13/2011**
SS-7	**LATERAL CONNECTION TO EXISTING SEWER MAIN**	**1/13/2011**
SS-8	**DROP MANHOLE CONNECTION**	**1/13/2011**
SS-9	**WYE BRANCH LATERAL**	**1/13/2011**
UT-1	**BACKFILL DETAIL – STREET**	**12/7/2011**
UT-2	**BACKFILL DETAIL – SHOULDER/EASEMENTS**	**1/13/2011**

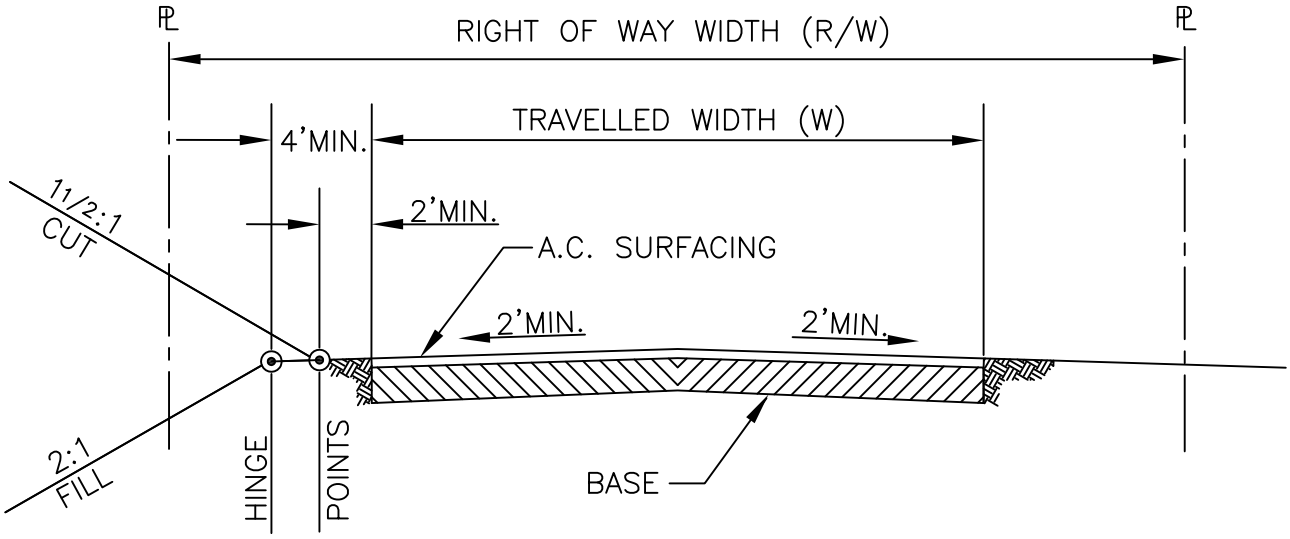

ROAD CLASSIFICATION	R/W	W	SURFACING A.C. min	BASE CL2 A.B.min
ARTERIAL ROAD	60'	24'	4"	8"
COLLECTOR ROAD	60'	22'	4"	8"
LOCAL ROAD	60'	22'	4"	8"
CUL-DE-SAC ROAD	60'	22'	4"	8"
PRIVATE ROAD	60'	20'	4"	8"

LOS ALTOS HILLS
CALIFORNIA

TITLE

TYPICAL GEOMETRIC ROAD SECTION

ADOPTED BY CITY COUNCIL DATE: 12/07/2011

SCALE: NONE
DATE: 11/18/2011
CHK: JMP

STANDARD DETAIL 1

26379 FREMONT ROAD, LOS ALTOS HILLS, CA 94022 • Phone: (650) 941-7222

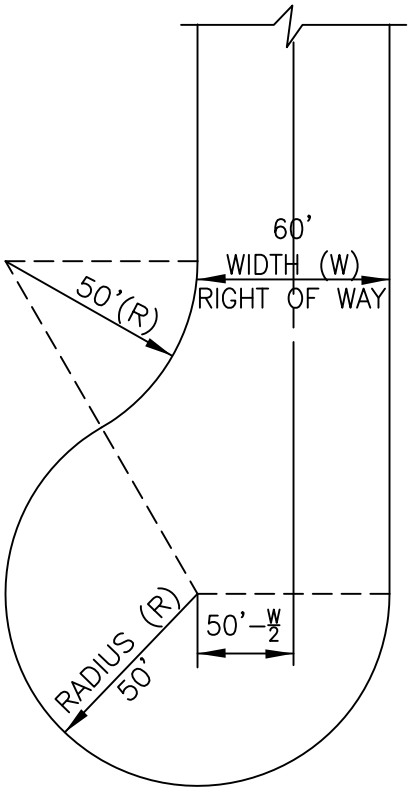

OFFSET BULB

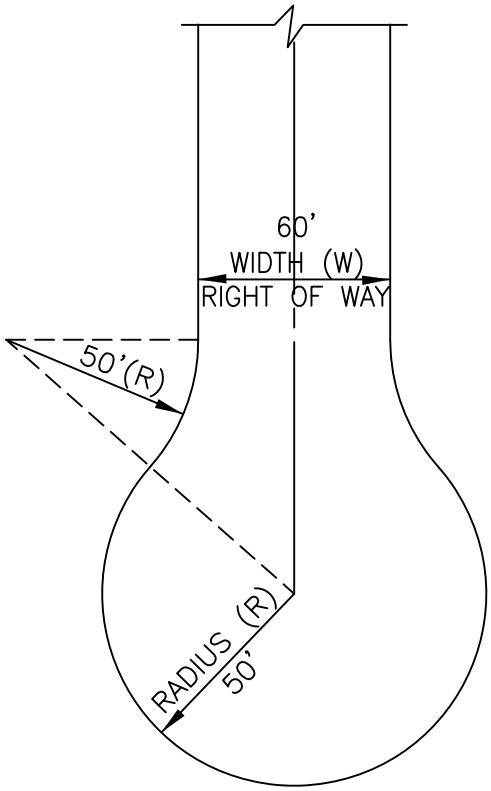

SYMMETRICAL BULB

NOTES:

1. SEE TYPICAL GEOMETRIC ROAD SECTIONS FOR ROAD WIDTH (W).
2. TYPICAL MAY BE OPPOSITE HAND.

LOS ALTOS HILLS CALIFORNIA	TITLE ROAD STANDARDS CUL DE SAC DETAIL		
	ADOPTED BY CITY COUNCIL DATE: 12/07/2011	SCALE: NONE DATE: 11/18/2011 CHK: JMP	STANDARD DETAIL 2
	26379 FREMONT ROAD, LOS ALTOS HILLS, CA 94022 • Phone: (650) 941-7222		

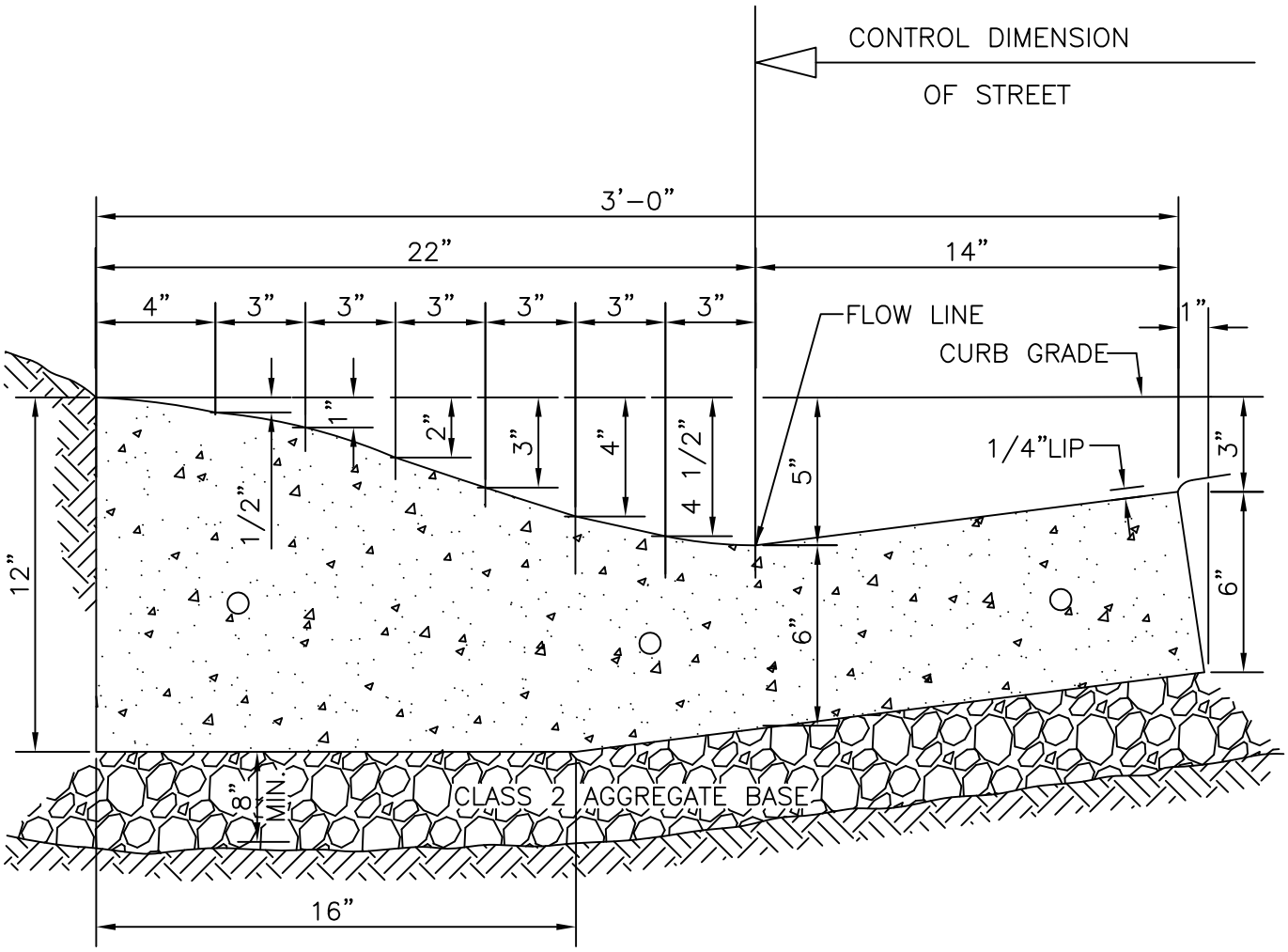

NOTES:

1. USE 1/2" EXPANSION JOINTS AT EACH END OF CURB RETURNS AND AT 60' O.C. MAXIMUM.
2. USE 1/2"ø-12" LONG, SMOOTH CAPPED DOWELS AT EACH EXPANSION JOINT AND AT ENDS OF POURS.
3. MARK DUMMY JOINTS 1" DEEP AT 20' O.C.
4. CLASS B CONCRETE.

LOS ALTOS HILLS CALIFORNIA	TITLE STANDARD ROLLED CURB		
	ADOPTED BY CITY COUNCIL DATE: 12/07/2011	SCALE: NONE DATE: 11/18/2011 CHK: JMP	STANDARD DETAIL 3
	26379 FREMONT ROAD, LOS ALTOS HILLS, CA 94022 • Phone: (650) 941-7222		

NOTE:

ISLAND REQUIRES AC SURFACING FOR PEDESTRIAN CROSSING, OTHERWISE FILL ISLAND WITH TOPSOIL GRADED TO DRAIN.

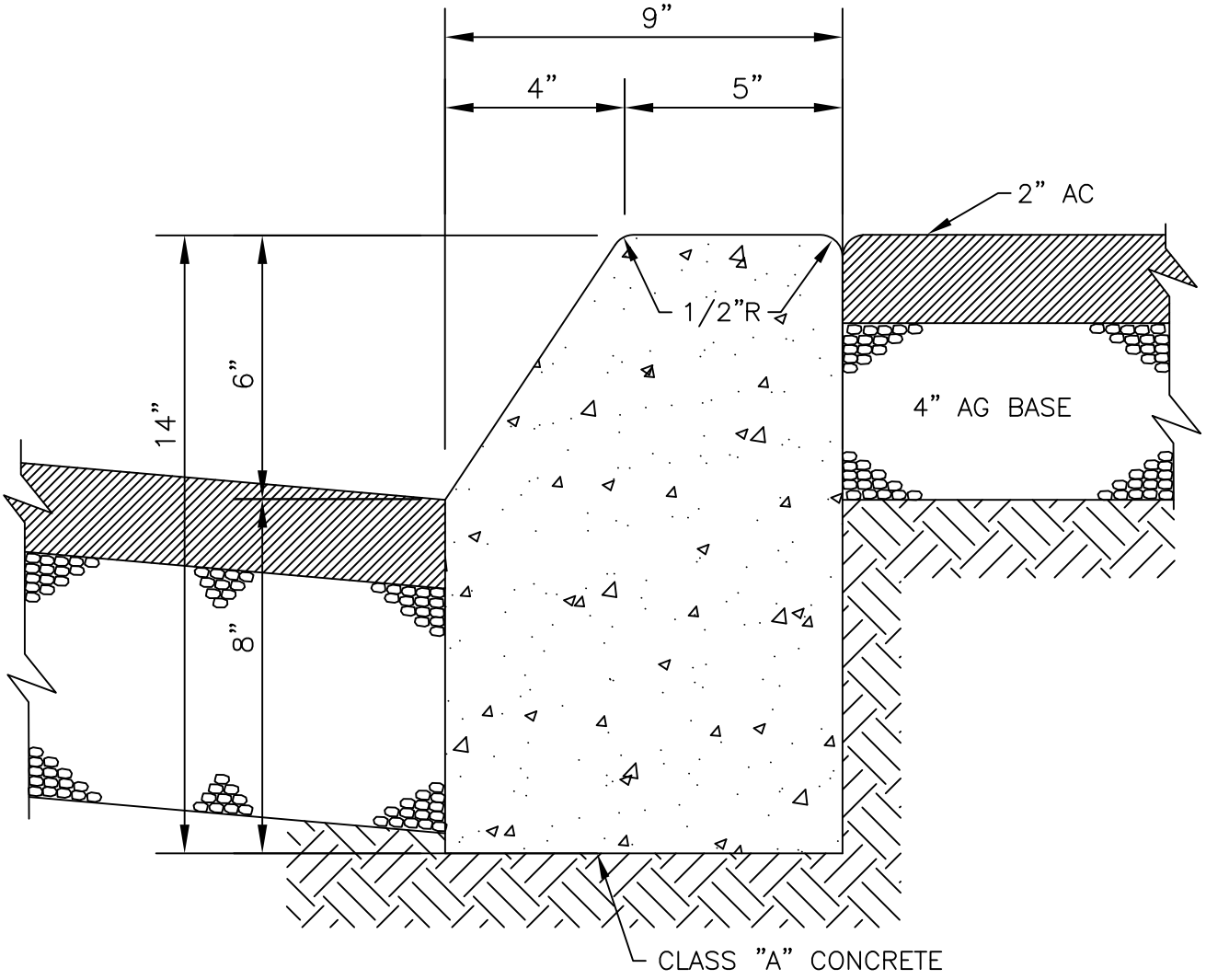

LOS ALTOS HILLS CALIFORNIA

TITLE

STANDARD ISLAND CURB

ADOPTED BY CITY COUNCIL DATE:	SCALE: NONE	STANDARD DETAIL
12/07/2011	DATE: 11/18/2011	4
	CHK: JMP	

26379 FREMONT ROAD, LOS ALTOS HILLS, CA 94022 • Phone: (650) 941-7222

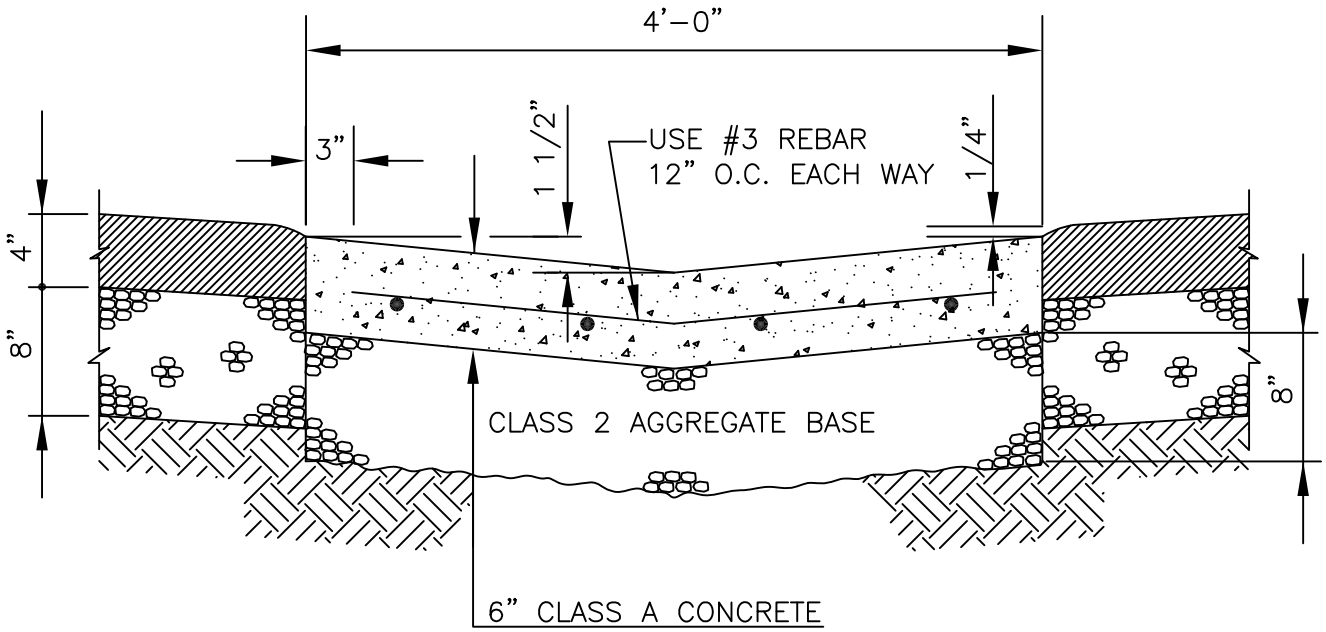

LOS ALTOS HILLS CALIFORNIA

TITLE

STANDARD CONCRETE VALLEY GUTTER

ADOPTED BY CITY COUNCIL DATE:	SCALE: NONE	STANDARD DETAIL
12/07/2011	DATE: 11/18/2011	5
	CHK: JMP	

26379 FREMONT ROAD, LOS ALTOS HILLS, CA 94022 • Phone: (650) 941-7222

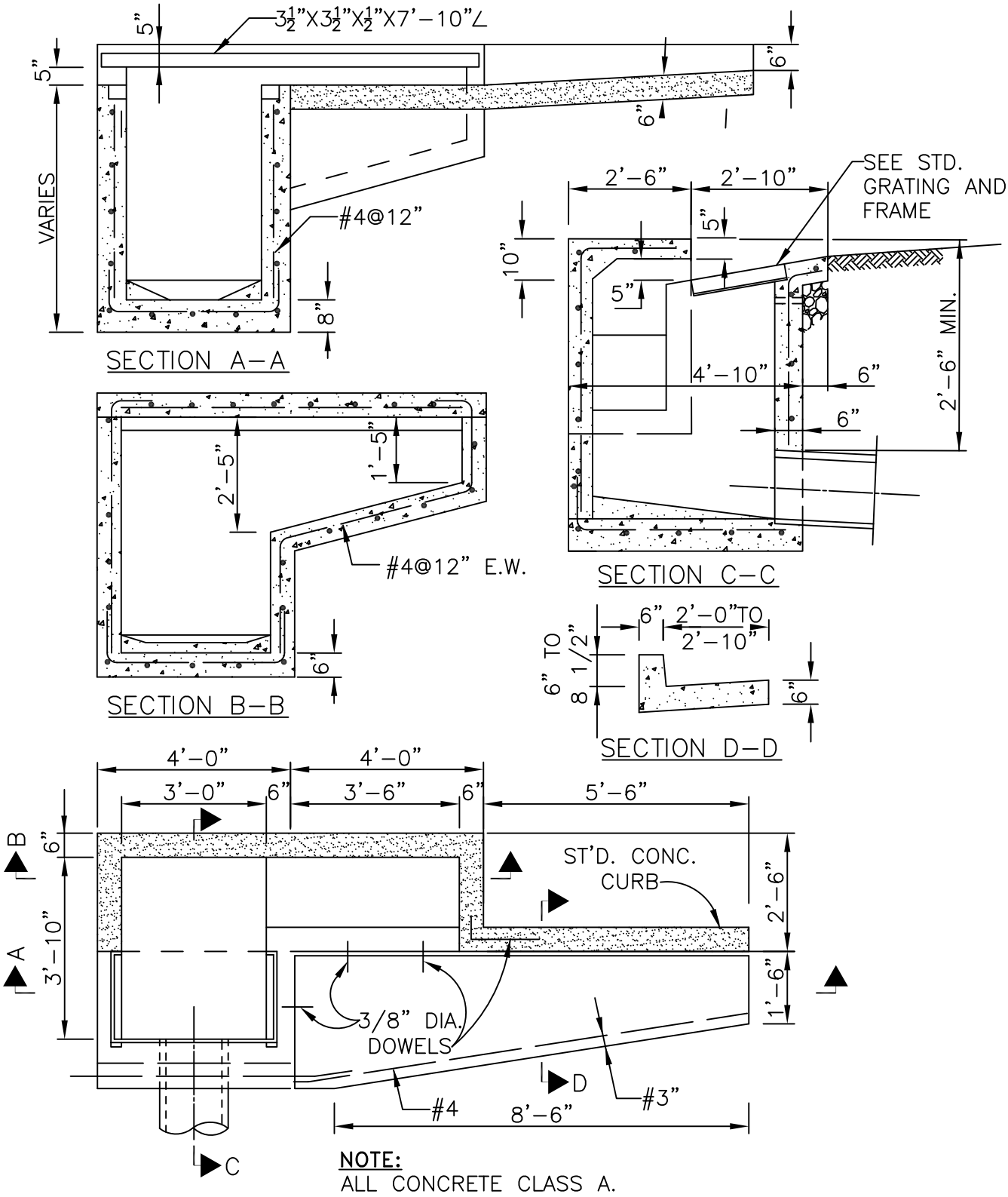

NOTE:
ALL CONCRETE CLASS A.

LOS ALTOS HILLS
CALIFORNIA

TITLE

CATCH BASIN TYPE 1

ADOPTED BY CITY COUNCIL DATE:	SCALE: NONE	STANDARD DETAIL
12/07/2011	DATE: 11/18/2011	6
	CHK: JMP	

26379 FREMONT ROAD, LOS ALTOS HILLS, CA 94022 • Phone: (650) 941-7222

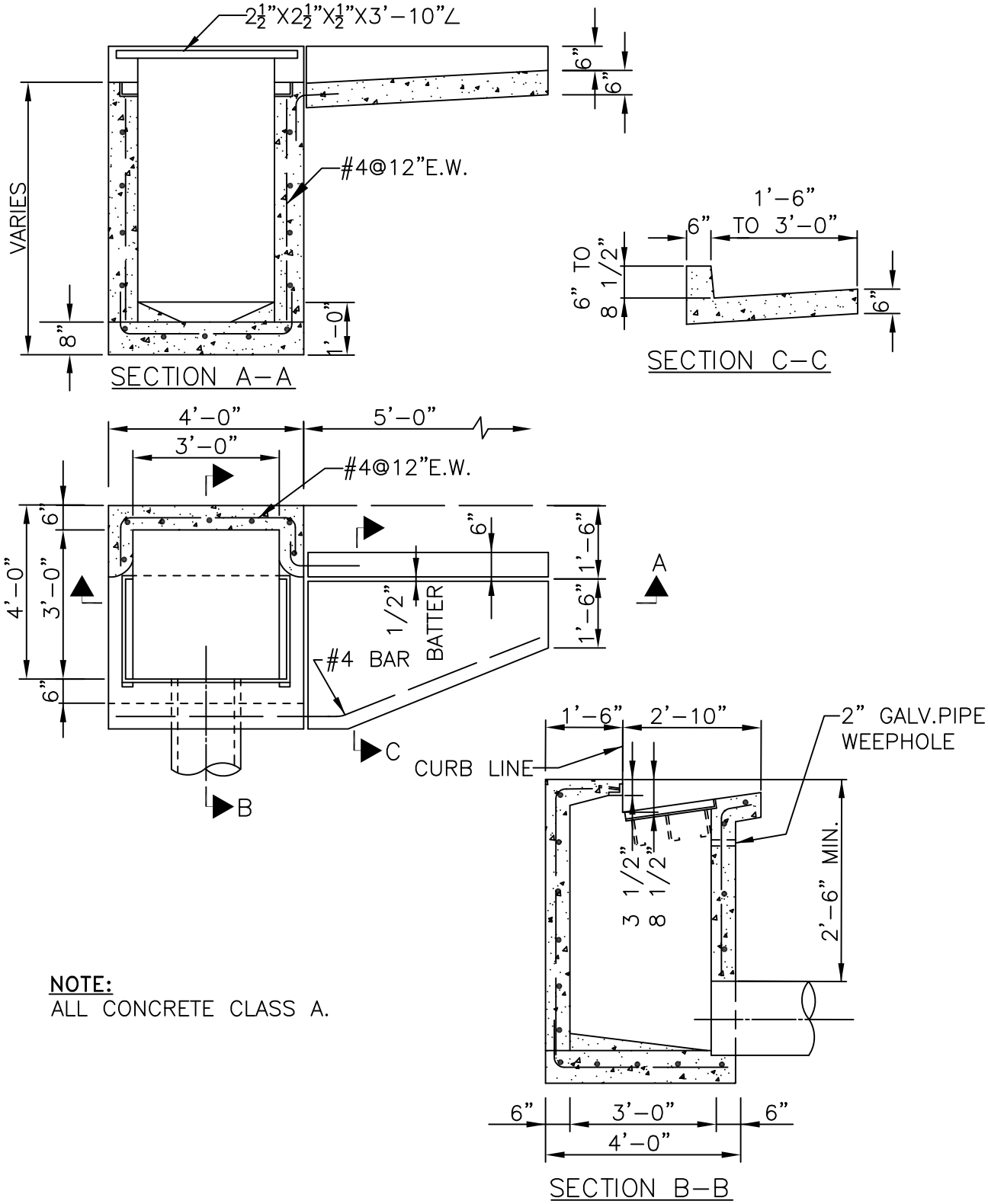

NOTE:
ALL CONCRETE CLASS A.

LOS ALTOS HILLS CALIFORNIA

TITLE

CATCH BASIN TYPE 2

ADOPTED BY CITY COUNCIL DATE:	SCALE: NONE	STANDARD DETAIL
12/07/2011	DATE: 11/18/2011	7
	CHK: JMP	

26379 FREMONT ROAD, LOS ALTOS HILLS, CA 94022 • Phone: (650) 941-7222

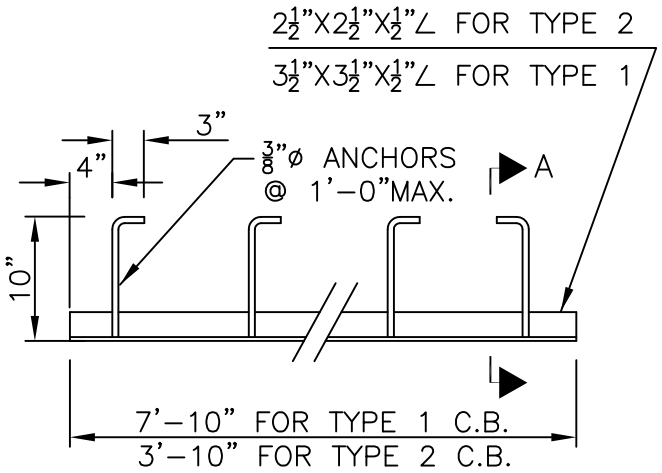

CURB ANGLE

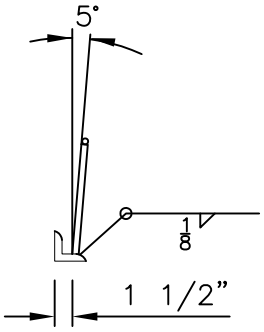

SECTION A

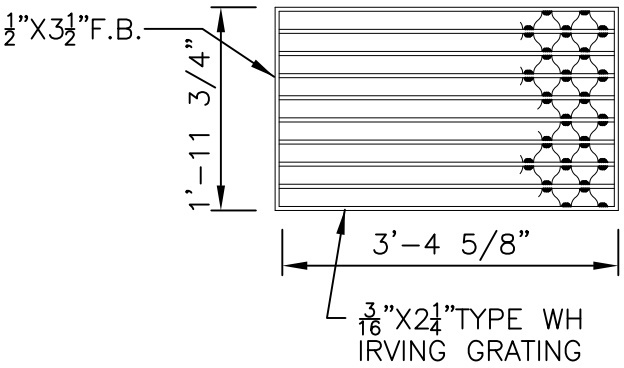

GRATING TYPE B

NOTE:
FRAMES, GRATINGS, AND CURB ANGLES TO BE HOT DIP GALVANIZED AFTER FABRICATION.

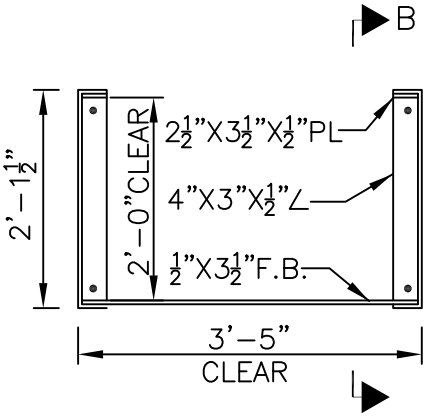

GRATING FRAME

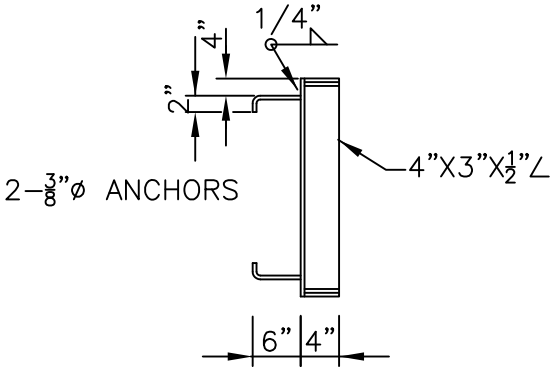

SECTION B

LOS ALTOS HILLS CALIFORNIA	TITLE: STANDARD CATCH BASIN HARDWARE		
	ADOPTED BY CITY COUNCIL DATE: 12/07/2011	SCALE: NONE DATE: 11/18/2011 CHK: JMP	STANDARD DETAIL 8
	26379 FREMONT ROAD, LOS ALTOS HILLS, CA 94022 • Phone: (650) 941-7222		

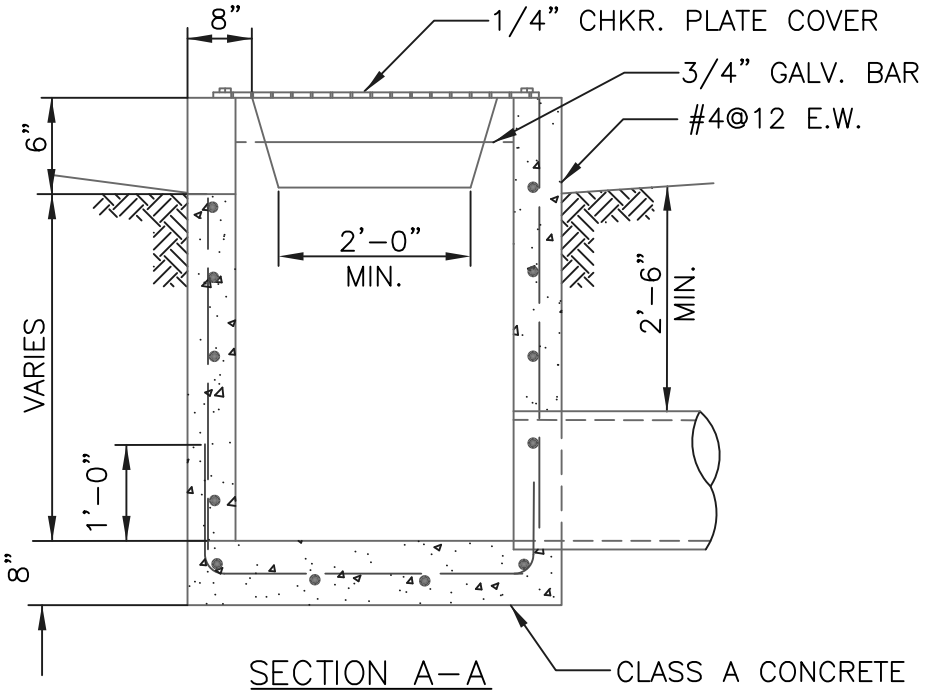

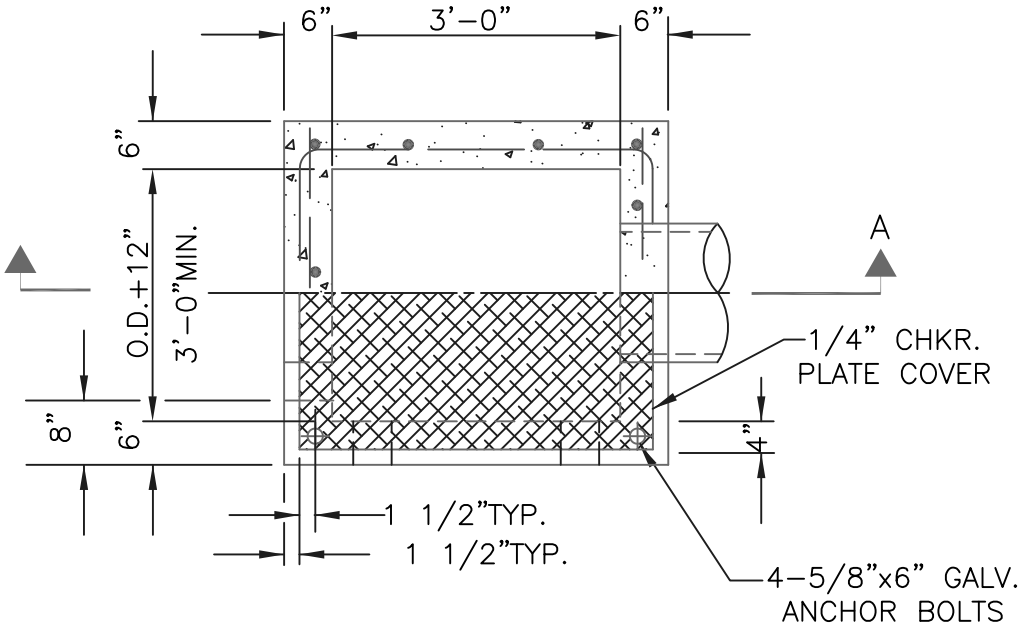

LOS ALTOS HILLS CALIFORNIA	TITLE DROP INLET TYPE 1		
	ADOPTED BY CITY COUNCIL DATE: 12/07/2011	SCALE: NONE DATE: 11/18/2011 CHK: JMP	STANDARD DETAIL 9
	26379 FREMONT ROAD, LOS ALTOS HILLS, CA 94022 • Phone: (650) 941-7222		

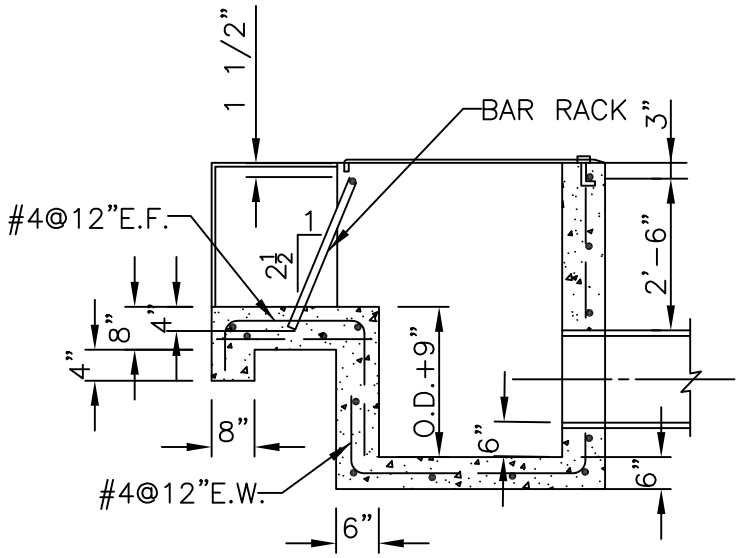

SECTION A-A

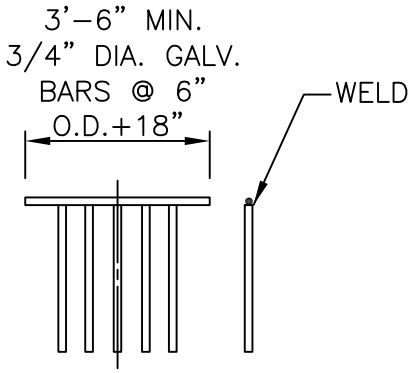

BAR RACK

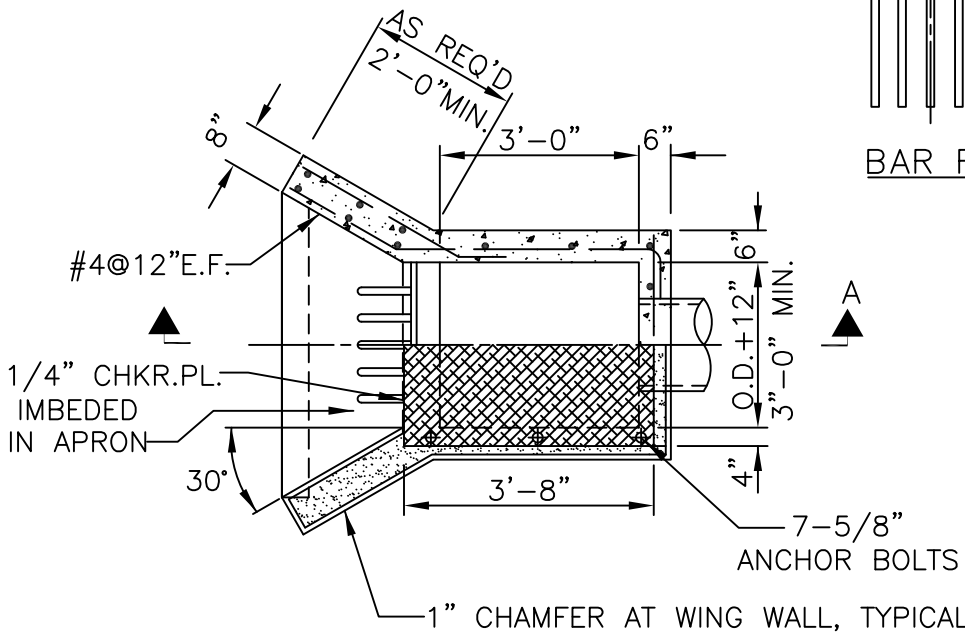

NOTE:
ALL CONCRETE CLASS A.

LOS ALTOS HILLS CALIFORNIA	TITLE: DROP INLET TYPE 2		
	ADOPTED BY CITY COUNCIL DATE: 12/07/2011	SCALE: NONE DATE: 11/18/2011 CHK: JMP	STANDARD DETAIL 10
	26379 FREMONT ROAD, LOS ALTOS HILLS, CA 94022 • Phone: (650) 941-7222		

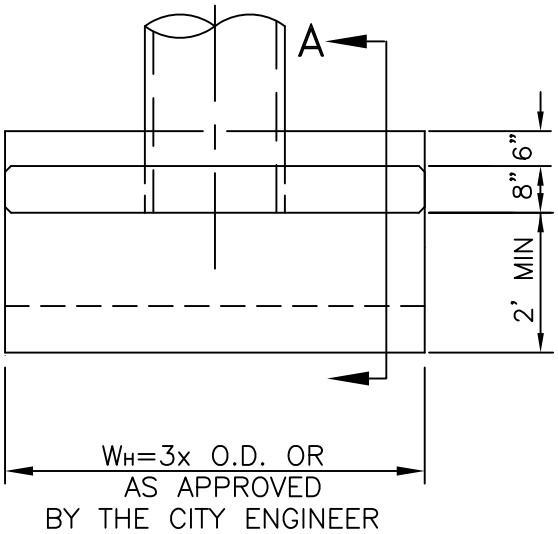

PLAN

LEGEND

E.F.	EACH FACE
E.W.	EACH WAY
H_F	HEIGHT OF FREEBOARD
MAX.	MAXIMUM
MIN.	MINIMUM
TYP.	TYPICAL
O.D.	OUTSIDE DIAMETER
W_H	WIDTH OF HEADWALL

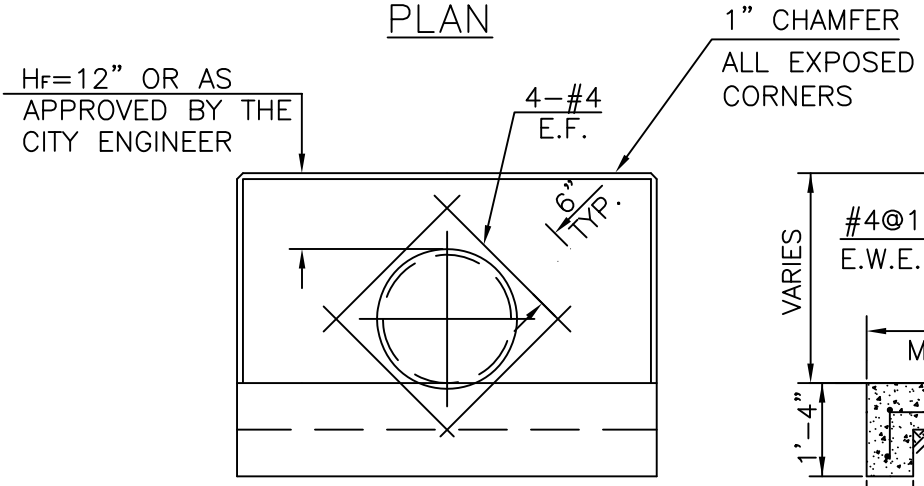

ELEVATION

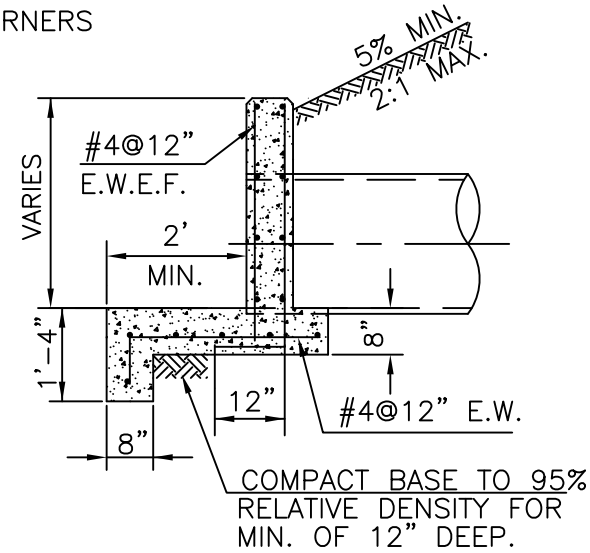

SECTION A

NOTES:

1. ALL CONCRETE TO BE CLASS "A" IN ACCORDANCE WITH SECTION 90, OF STATE STANDARD SPECIFICATIONS.

2. BAR REINFORCEMENT SHALL CONFORM TO SEC. 52 OF STATE STANDARD SPECIFICATIONS. MIN. 2" CLEAR FROM FACE OF CONCRETE. VERTICAL LAP SPLICE, 18"MIN.

LOS ALTOS HILLS CALIFORNIA

TITLE

HEADWALL TYPE "A"

ADOPTED BY CITY COUNCIL DATE:	SCALE: NONE	STANDARD DETAIL
12/07/2011	DATE: 11/18/2011	11
	CHK: JMP	

26379 FREMONT ROAD, LOS ALTOS HILLS, CA 94022 • Phone: (650) 941-7222

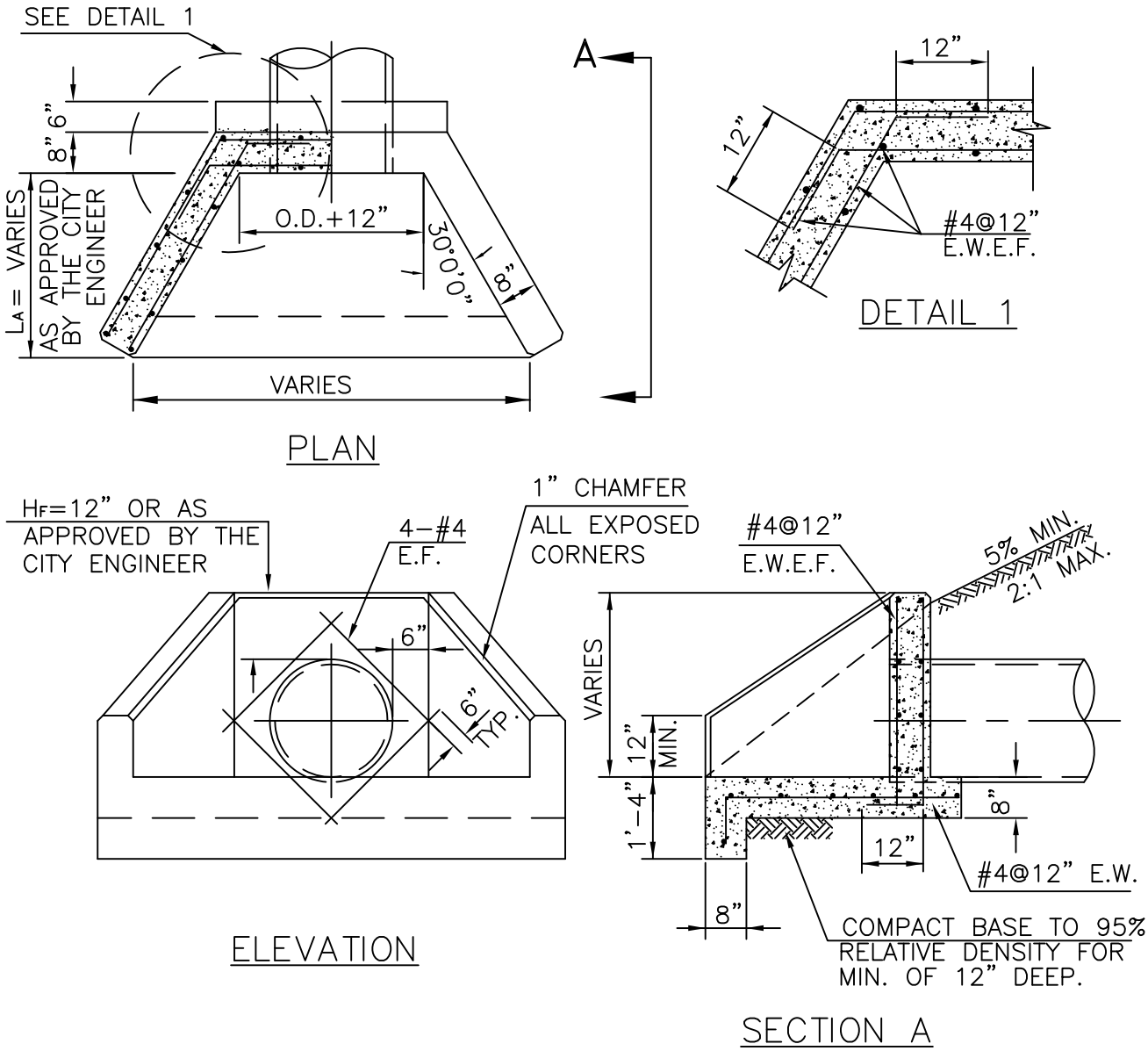

LEGEND

E.F.	EACH FACE
E.W.	EACH WAY
H_F	HEIGHT OF FREEBOARD
L_A	LENGTH OF APRON
MAX.	MAXIMUM
MIN.	MINIMUM
O.D.	OUTSIDE DIAMETER
TYP.	TYPICAL

NOTES:

1. ALL CONCRETE TO BE CLASS "A" IN ACCORDANCE WITH SECTION 90, OF STATE STANDARD SPECIFICATIONS.
2. BAR REINFORCEMENT SHALL CONFORM TO SEC. 52 OF STATE STANDARD SPECIFICATIONS. MIN. 2" CLEAR FROM FACE OF CONCRETE. VERTICAL LAP SPLICE, 18"MIN.

LOS ALTOS HILLS CALIFORNIA

TITLE

HEADWALL TYPE "B"

ADOPTED BY CITY COUNCIL DATE:	SCALE: NONE	STANDARD DETAIL
12/07/2011	DATE: 11/18/2011	12
	CHK: JMP	

26379 FREMONT ROAD, LOS ALTOS HILLS, CA 94022 • Phone: (650) 941-7222

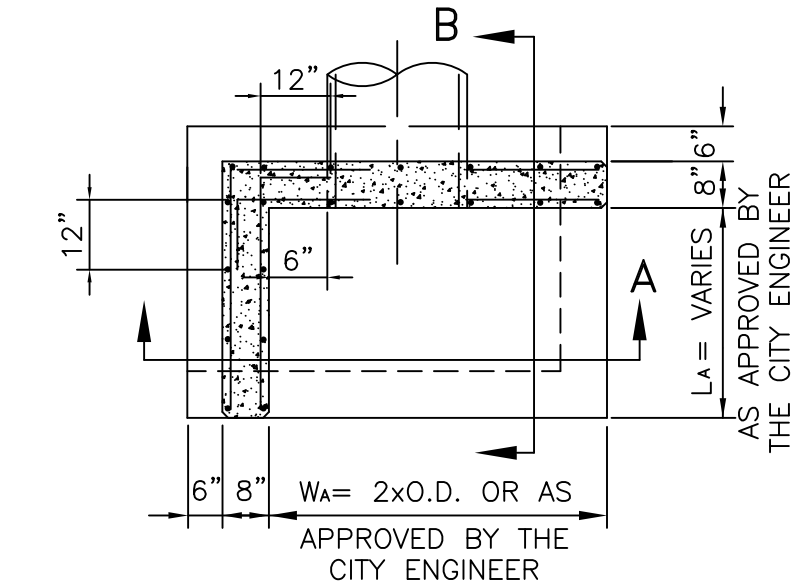

PLAN

LEGEND

E.F.	EACH FACE
E.W.	EACH WAY
HF	HEIGHT OF FREEBOARD
LA	LENGTH OF APRON
MAX.	MAXIMUM
MIN.	MINIMUM
O.D.	OUTSIDE DIAMETER
TYP.	TYPICAL
WA	WIDTH OF APRON

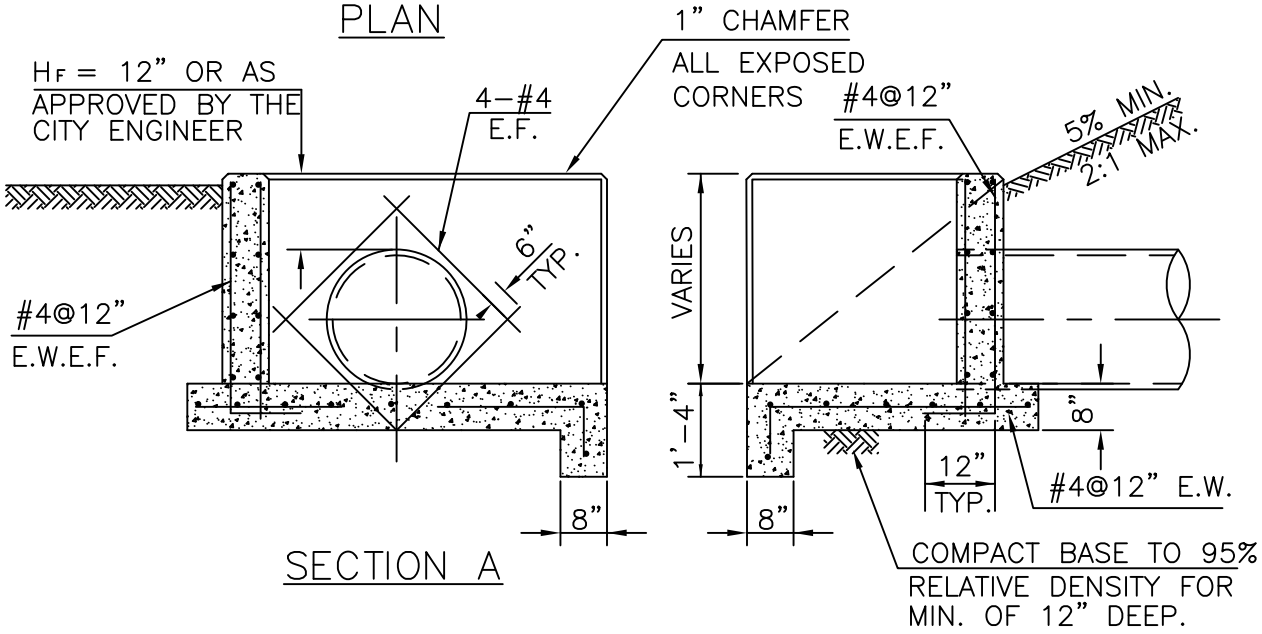

SECTION A

SECTION B

NOTES:

1. ALL CONCRETE TO BE CLASS "A" IN ACCORDANCE WITH SECTION 90, OF STATE STANDARD SPECIFICATIONS.

2. BAR REINFORCEMENT SHALL CONFORM TO SEC. 52 OF STATE STANDARD SPECIFICATIONS. MIN. 2" CLEAR FROM FACE OF CONCRETE. VERTICAL LAP SPLICE, 18"MIN.

LOS ALTOS HILLS CALIFORNIA	TITLE HEADWALL TYPE "C"		
	ADOPTED BY CITY COUNCIL DATE: 12/07/2011	SCALE: NONE DATE: 11/18/2011 CHK: JMP	STANDARD DETAIL 13
	26379 FREMONT ROAD, LOS ALTOS HILLS, CA 94022 • Phone: (650) 941-7222		

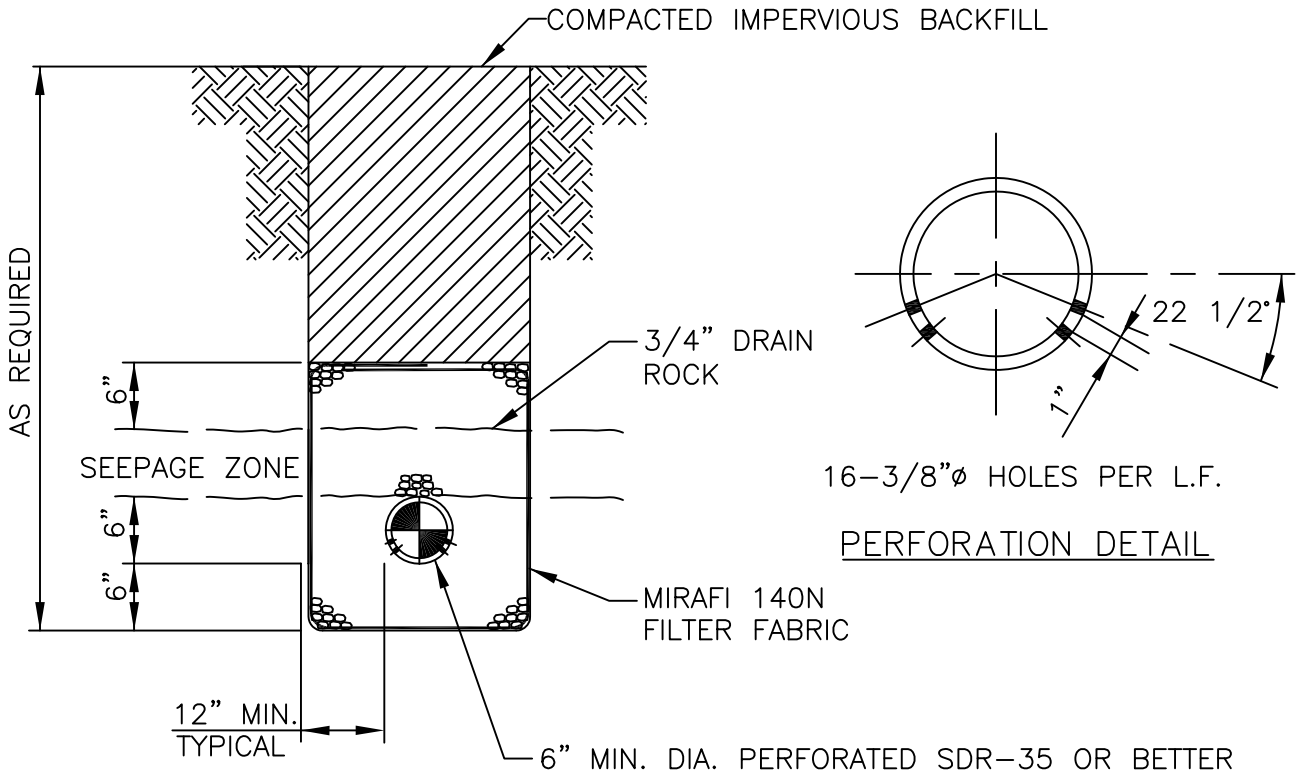

LOS ALTOS HILLS CALIFORNIA

TITLE

STANDARD SUBDRAIN

ADOPTED BY CITY COUNCIL DATE:	SCALE: NONE	STANDARD DETAIL
12/07/2011	DATE: 11/18/2011	14
	CHK: JMP	

26379 FREMONT ROAD, LOS ALTOS HILLS, CA 94022 • Phone: (650) 941-7222

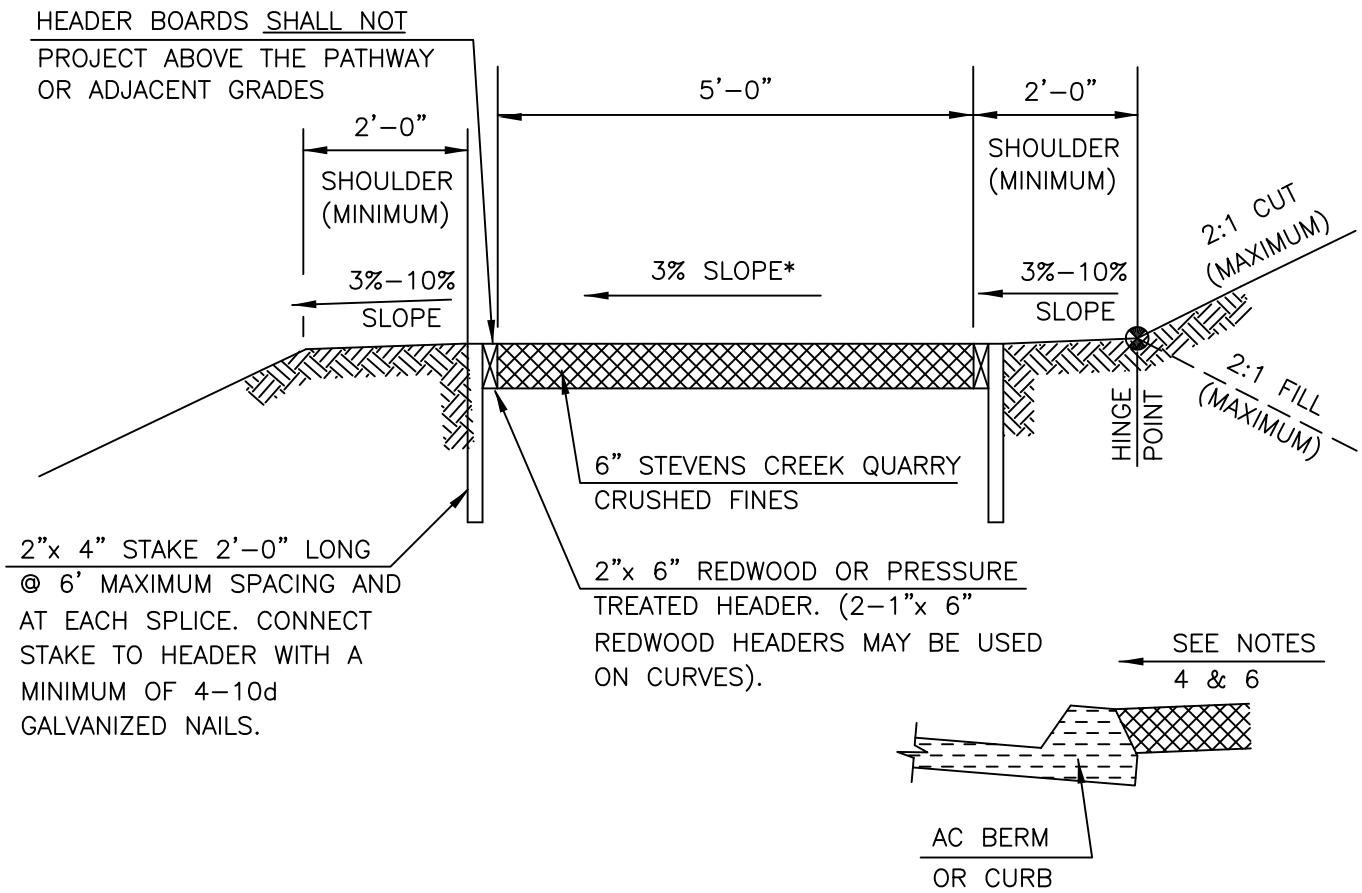

NOTES:

1. PATHWAY MATERIAL AND SHOULDERS SHALL BE COMPACTED TO 95% RELATIVE DENSITY.
2. IRRIGATION SYSTEMS SHALL NOT BE LOCATED CLOSER THAN 3 FEET TO A PATHWAY. NO IRRIGATION WATER MAY BE DIRECTED TOWARD OR ON THE PATHWAY.
3. TREES AND SHRUBS SHALL NOT BE PLANTED CLOSER THAN 5 FEET TO A PATHWAY. GROUND COVER MAY NOT BE PLANTED CLOSER THAN 3 FEET FROM A PATHWAY.

*4. 5% MAXIMUM IF APPROVED BY THE CITY ENGINEER. PATHWAY AND SHOULDER CROSS SLOPES SHALL DRAIN TOWARD OR AWAY FROM THE ADJACENT ROAD AS APPROVED BY THE CITY ENGINEER.

5. UTILITY BOXES, SERVICE METERS, MANHOLES, MAIL BOXES, FIRE HYDRANTS AND ALL OTHER OBSTRUCTIONS SHALL NOT BE ALLOWED WITHIN THE PATHWAY. PATHWAYS MAY MEANDER AROUND EXISTING UTILITY POLES, FIRE HYDRANTS AND MAIL BOXES WHERE FEASIBLE.
6. HEADER BOARDS MAY BE OMITTED ON THE SIDE OF THE PATHWAY IMMEDIATELY ADJACENT TO BERM AND CURBS.
7. SEE STANDARD DETAIL #21 FOR WATER BAR INSTALLATION.

LOS ALTOS HILLS CALIFORNIA	TITLE: ROADSIDE PATH TYPE (2B)		
	ADOPTED BY CITY COUNCIL DATE: 12/07/2011	SCALE: NONE DATE: 11/18/2011 CHK: JMP	STANDARD DETAIL 15
	26379 FREMONT ROAD, LOS ALTOS HILLS, CA 94022 • Phone: (650) 941–7222		

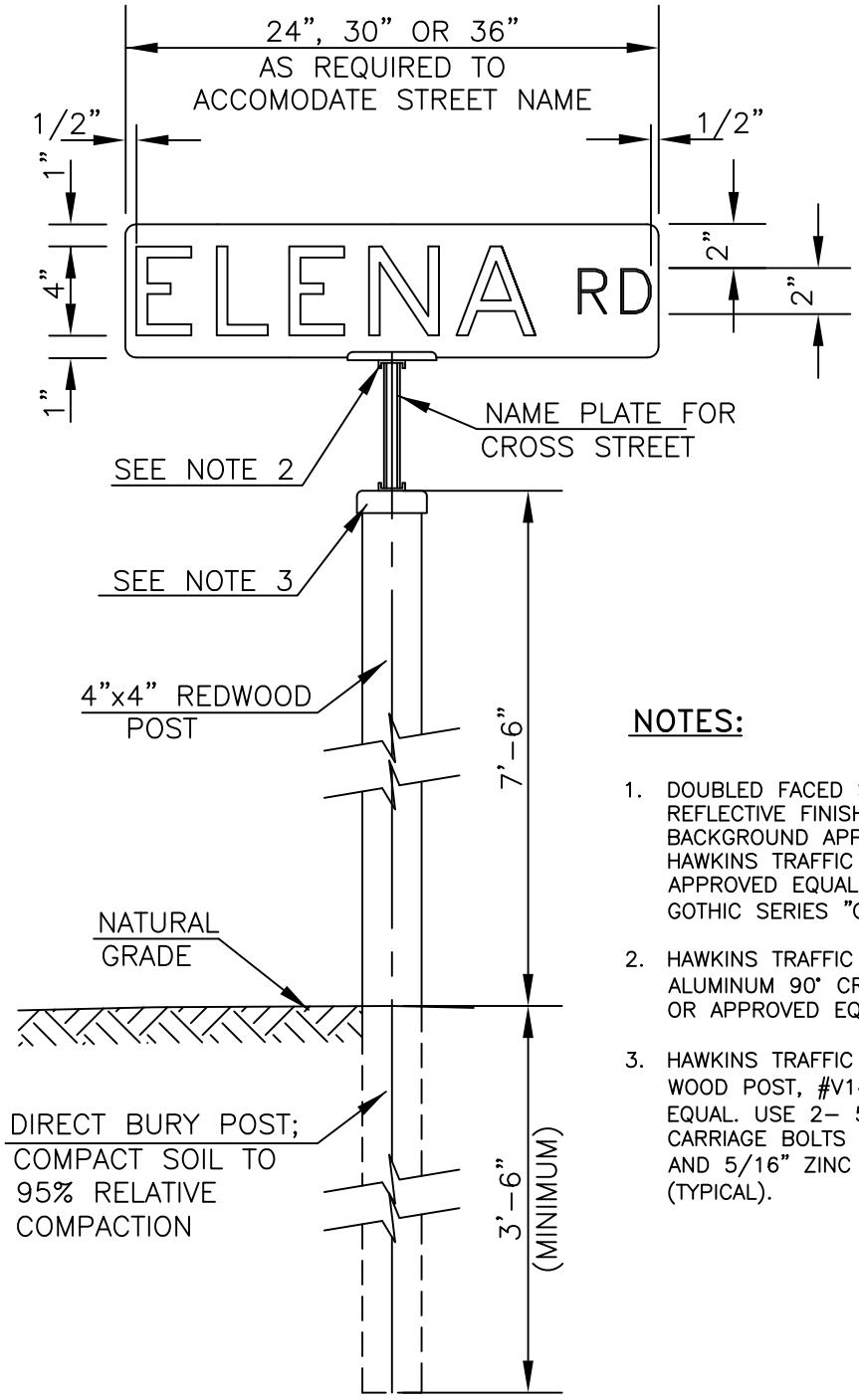

NOTES:

1. DOUBLED FACED STREET NAME PLATES WITH REFLECTIVE FINISH AND SILVER LEGEND ON GREEN BACKGROUND APPLIED TO 0.060 ALUMINUM BACKING. HAWKINS TRAFFIC SAFETY SUPPLY FORMAT SM-C9, OR APPROVED EQUAL LETTERING SHALL BE UPPERCASE GOTHIC SERIES "C".
2. HAWKINS TRAFFIC SAFETY SUPPLY HEAVY DUTY ALUMINUM 90° CROSS PIECE #14F-(HD)VP-105(90) OR APPROVED EQUAL.
3. HAWKINS TRAFFIC SAFETY SUPPLY CAP TO FIT 4"x4" WOOD POST, #V14F-(HD)VP-4WPC OR APPROVED EQUAL. USE 2- 5/16"x 4 1/2" ZINC PLATED STEEL CARRIAGE BOLTS WITH NYLON WASHER, ADAPTOR RING AND 5/16" ZINC DIE CAST TAMPERPROOF NUTS (TYPICAL).

LOS ALTOS HILLS CALIFORNIA	TITLE: STREET NAME SIGN		
	ADOPTED BY CITY COUNCIL DATE: 12/07/2011	SCALE: NONE DATE: 11/18/2011 CHK: JMP	STANDARD DETAIL 16
	26379 FREMONT ROAD, LOS ALTOS HILLS, CA 94022 • Phone: (650) 941-7222		

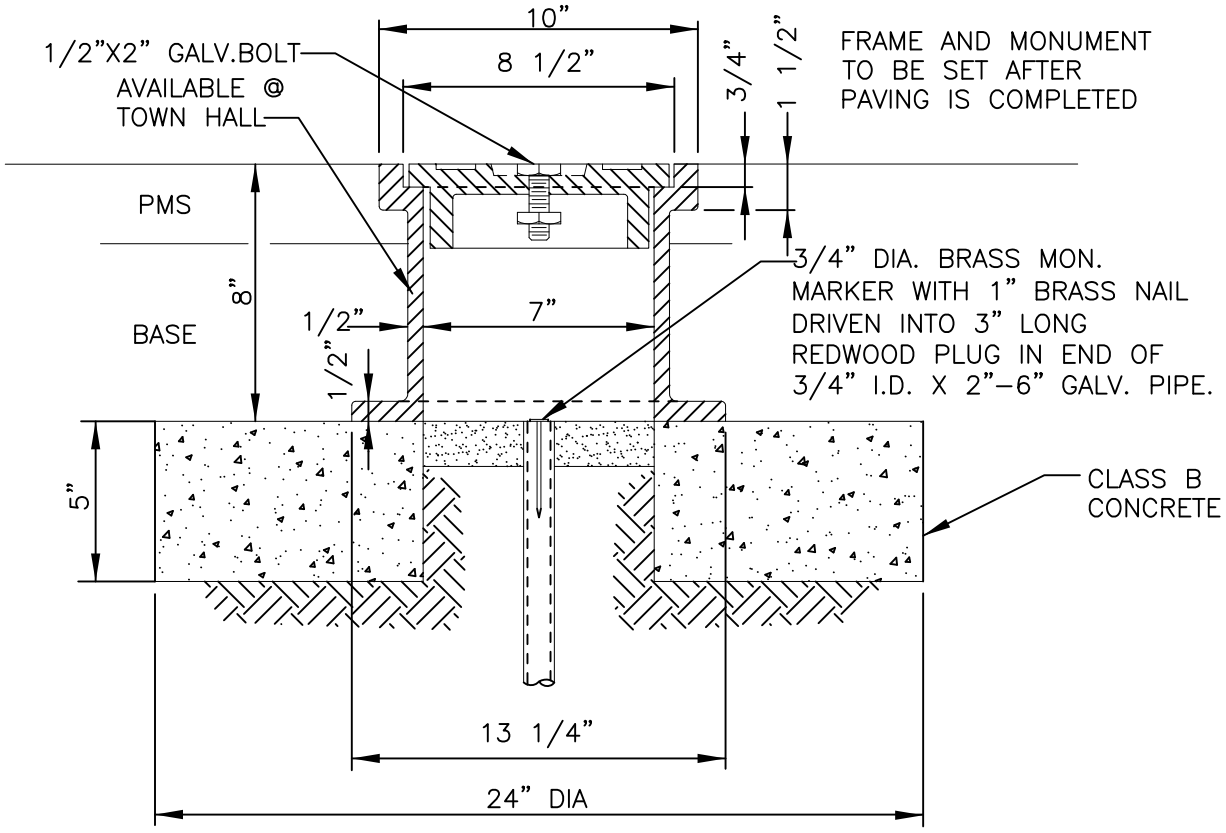

LOS ALTOS HILLS
CALIFORNIA

TITLE

STREET MONUMENT

ADOPTED BY CITY COUNCIL DATE:	SCALE: NONE	STANDARD DETAIL
12/07/2011	DATE: 11/18/2011	17
	CHK: JMP	

26379 FREMONT ROAD, LOS ALTOS HILLS, CA 94022 • Phone: (650) 941-7222

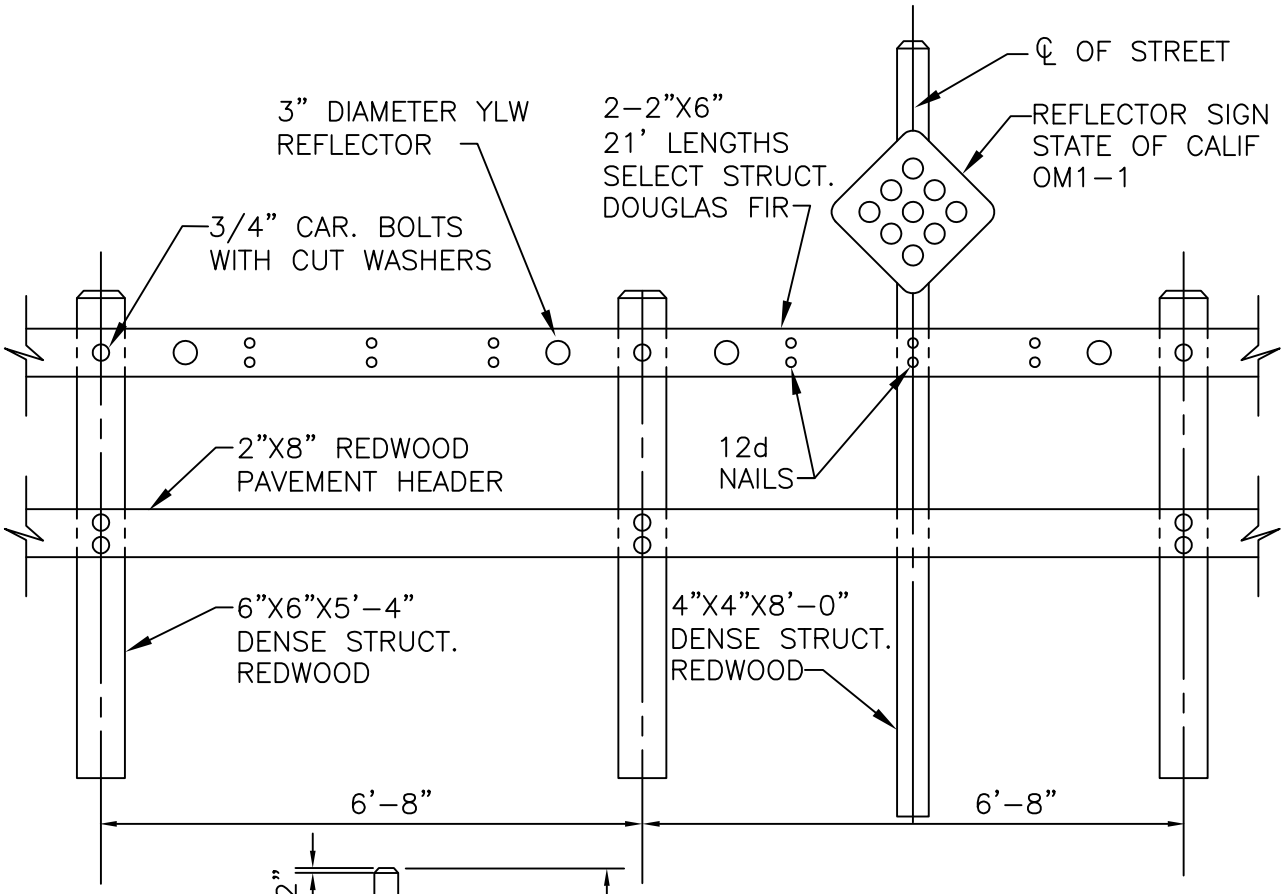

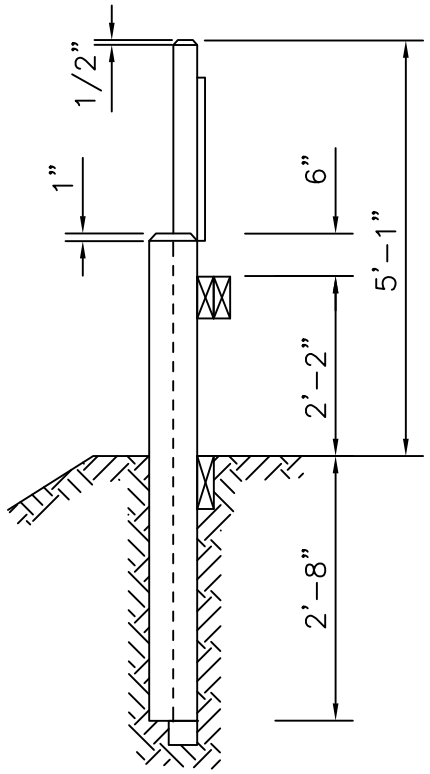

NOTE:

APPLY ONE COAT OF PRIMER AND THREE COATS OF EXTERIOR WHITE PAINT.

LOS ALTOS HILLS CALIFORNIA

TITLE

STANDARD ROAD BARRICADE

ADOPTED BY CITY COUNCIL DATE:	SCALE: NONE	STANDARD DETAIL
12/07/2011	DATE: 11/18/2011	18
	CHK: JMP	

26379 FREMONT ROAD, LOS ALTOS HILLS, CA 94022 • Phone: (650) 941–7222

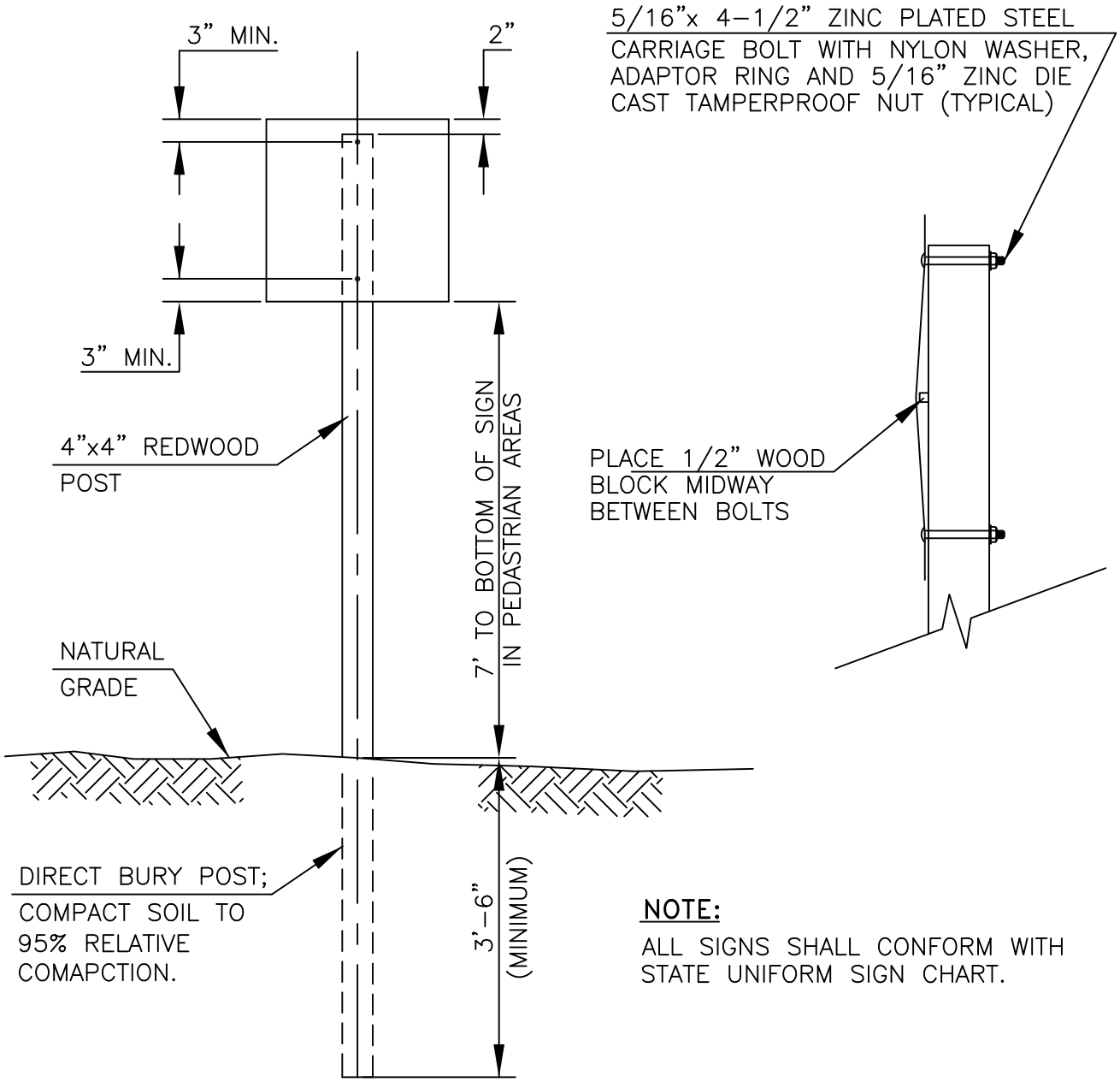

NOTE:

ALL SIGNS SHALL CONFORM WITH STATE UNIFORM SIGN CHART.

LOS ALTOS HILLS CALIFORNIA	TITLE STREET SIGN		
	ADOPTED BY CITY COUNCIL DATE: 12/07/2011	SCALE: NONE DATE: 11/18/2011 CHK: JMP	STANDARD DETAIL 19
	26379 FREMONT ROAD, LOS ALTOS HILLS, CA 94022 • Phone: (650) 941-7222		

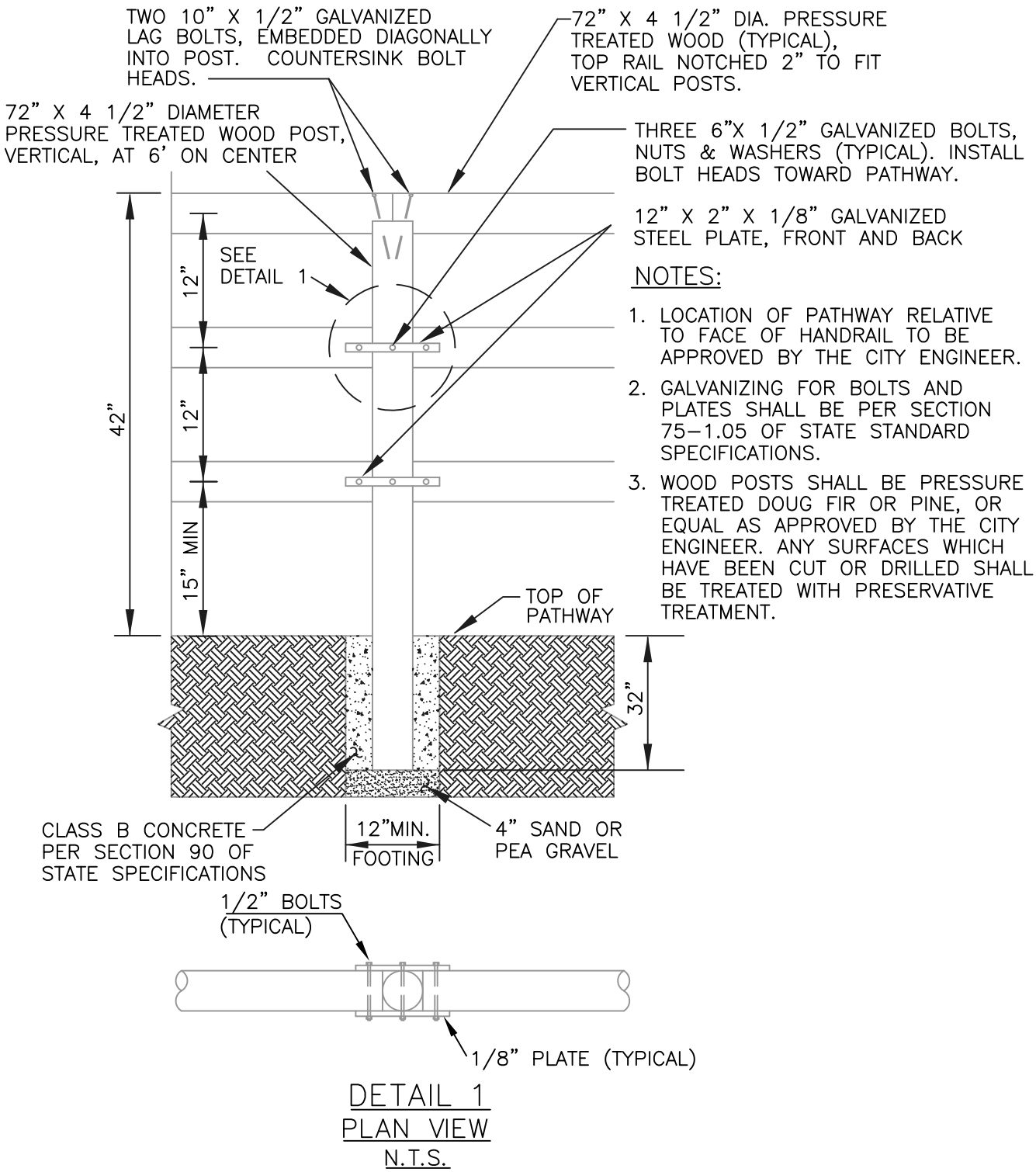

NOTES:

1. LOCATION OF PATHWAY RELATIVE TO FACE OF HANDRAIL TO BE APPROVED BY THE CITY ENGINEER.
2. GALVANIZING FOR BOLTS AND PLATES SHALL BE PER SECTION 75–1.05 OF STATE STANDARD SPECIFICATIONS.
3. WOOD POSTS SHALL BE PRESSURE TREATED DOUG FIR OR PINE, OR EQUAL AS APPROVED BY THE CITY ENGINEER. ANY SURFACES WHICH HAVE BEEN CUT OR DRILLED SHALL BE TREATED WITH PRESERVATIVE TREATMENT.

DETAIL 1
PLAN VIEW
N.T.S.

LOS ALTOS HILLS CALIFORNIA	TITLE: PATHWAY HANDRAIL		
	ADOPTED BY CITY COUNCIL DATE: 12/07/2011	SCALE: NONE DATE: 11/18/2011 CHK: JMP	STANDARD DETAIL 20
	26379 FREMONT ROAD, LOS ALTOS HILLS, CA 94022 • Phone: (650) 941–7222		

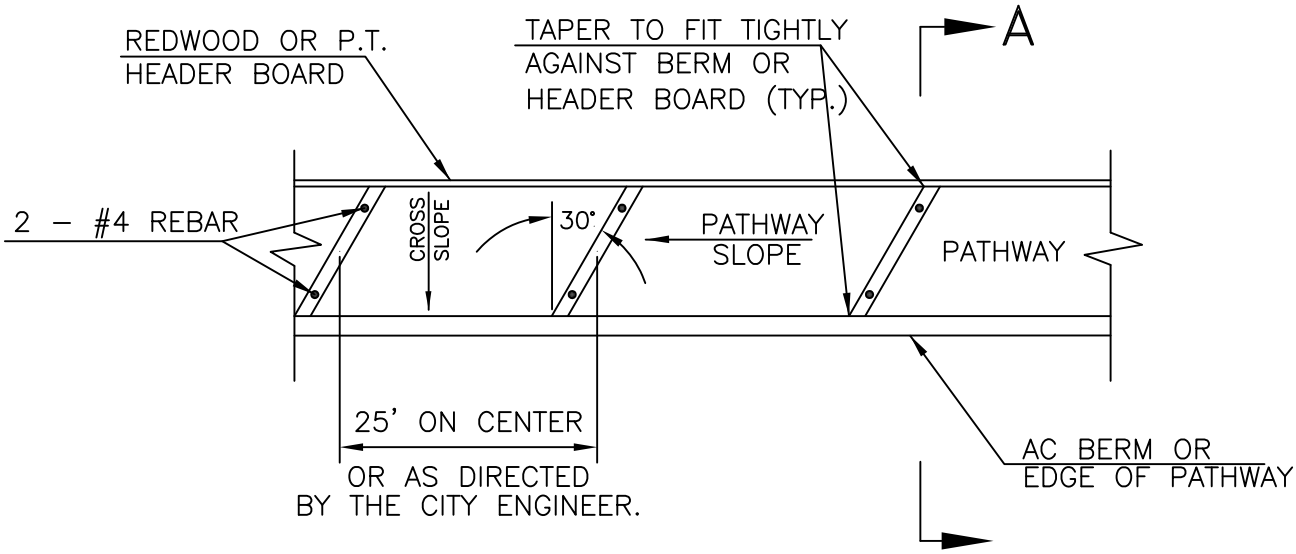

PLAN

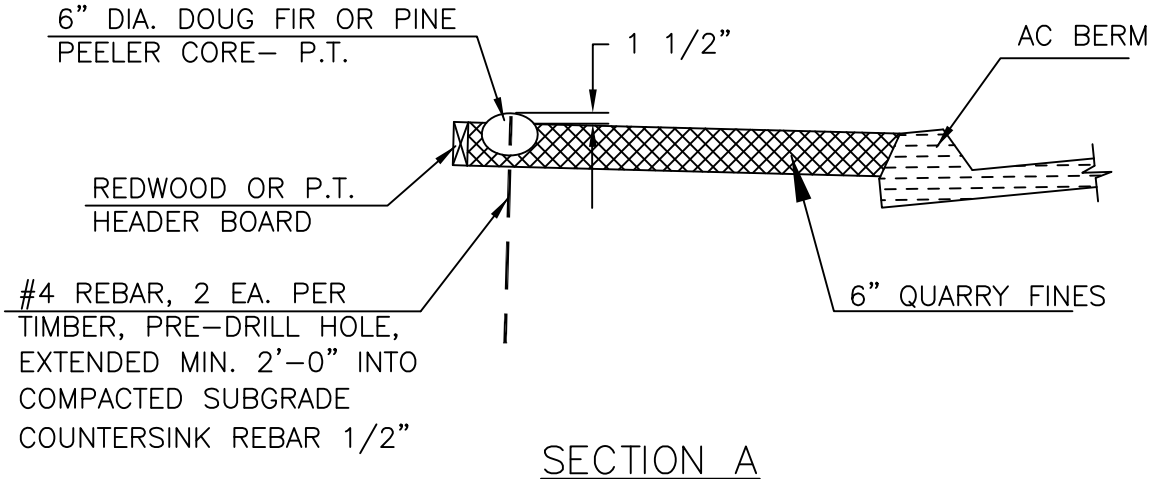

SECTION A

LEGEND

P.T.	PRESSURE TREATED
TYP.	TYPICAL
DIA.	DIAMETER
EA.	EACH
AC	ASPHALT CONCRETE

LOS ALTOS HILLS
CALIFORNIA

TITLE

PATHWAY WATER BAR

ADOPTED BY CITY COUNCIL DATE:	SCALE: NONE	STANDARD DETAIL
12/07/2011	DATE: 11/18/2011	21
	CHK: JMP	

26379 FREMONT ROAD, LOS ALTOS HILLS, CA 94022 • Phone: (650) 941–7222

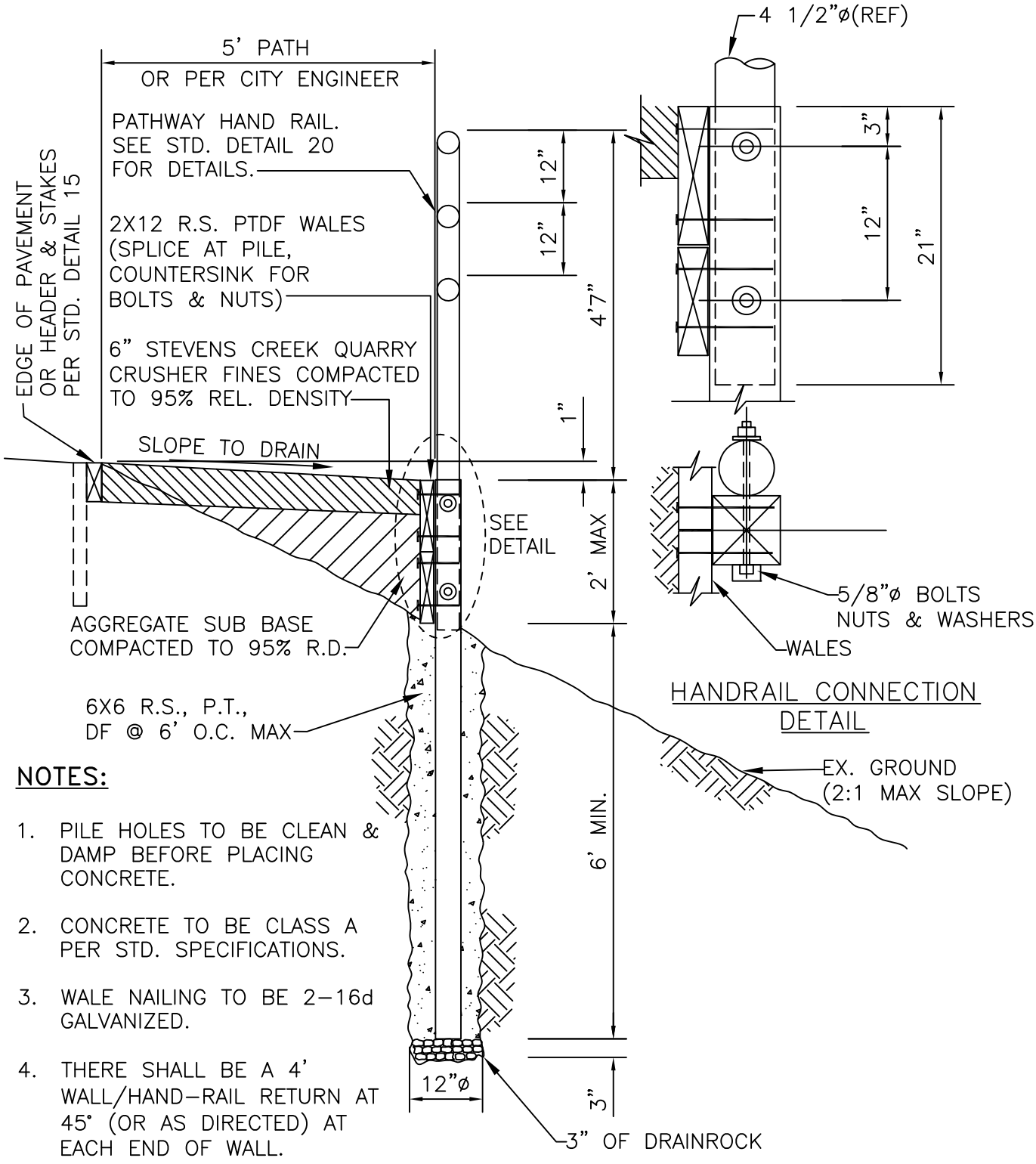

NOTES:

1. PILE HOLES TO BE CLEAN & DAMP BEFORE PLACING CONCRETE.
2. CONCRETE TO BE CLASS A PER STD. SPECIFICATIONS.
3. WALE NAILING TO BE 2–16d GALVANIZED.
4. THERE SHALL BE A 4' WALL/HAND–RAIL RETURN AT 45° (OR AS DIRECTED) AT EACH END OF WALL.

LOS ALTOS HILLS CALIFORNIA

TITLE

PATHWAY RETAINING WALL AND HANDRAIL

ADOPTED BY CITY COUNCIL DATE:	SCALE: NONE	STANDARD DETAIL
12/07/2011	DATE: 11/18/2011	22
	CHK: JMP	

26379 FREMONT ROAD, LOS ALTOS HILLS, CA 94022 • Phone: (650) 941–7222

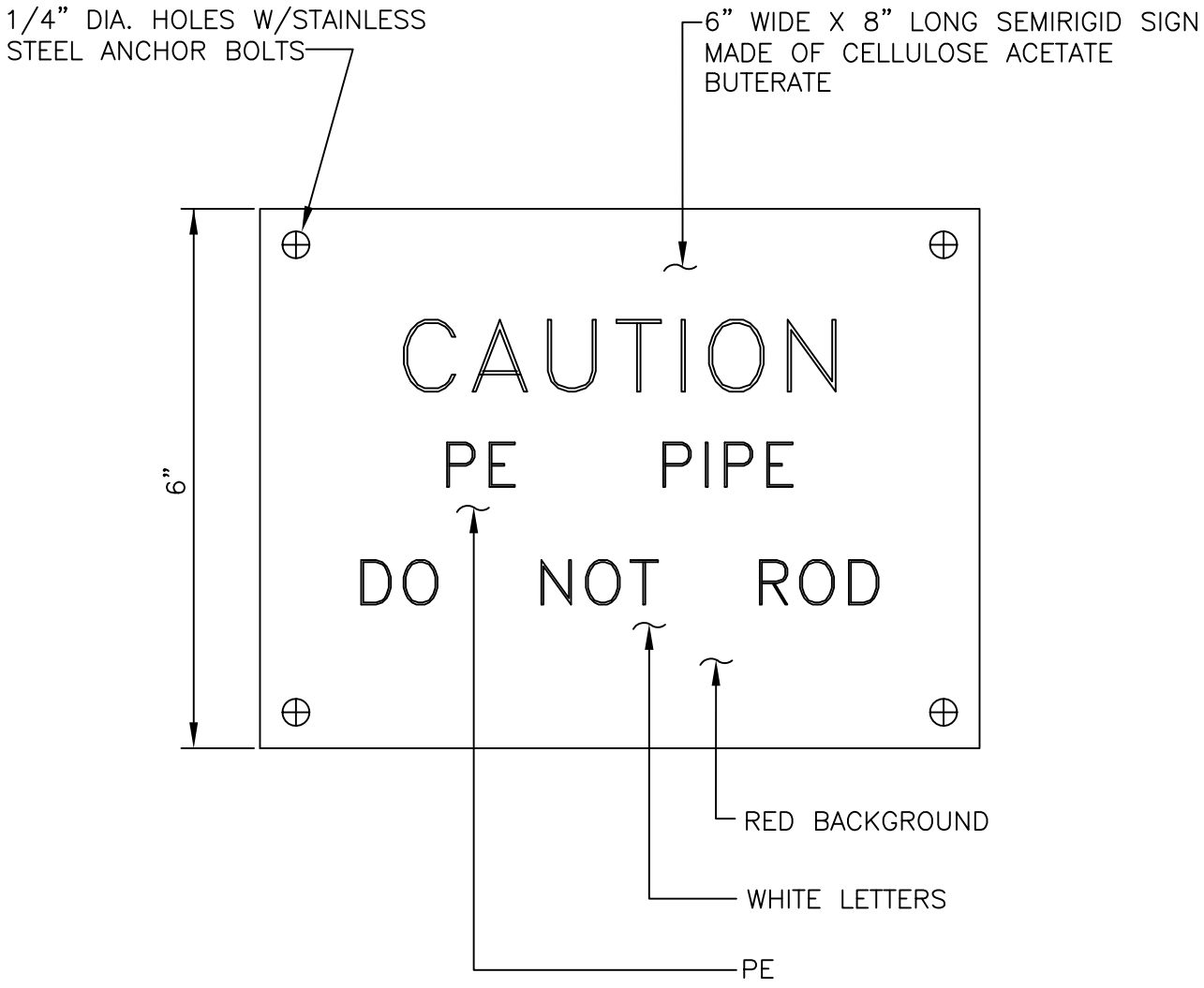

NOTE:

CAUTION SIGN MUST BE INSTALLED INSIDE SANITARY SEWER MANHOLE WHEN PE/PVC PIPE IS USED AND SHALL BE LOCATED AT 12" BELOW THE MANHOLE GRADE RING.

LOS ALTOS HILLS CALIFORNIA	TITLE: PLASTIC PIPE MANHOLE SIGN		
	ADOPTED BY CITY COUNCIL DATE: 12/07/2011	SCALE: NONE DATE: 11/18/2011 CHK: JMP	STANDARD DETAIL 23
	26379 FREMONT ROAD, LOS ALTOS HILLS, CA 94022 • Phone: (650) 941-7222		

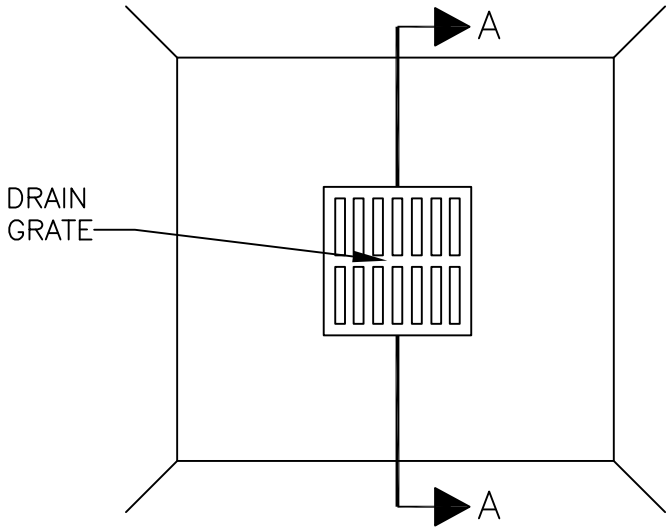

PLAN VIEW

INSERT FILTER FABRIC SECURELY UNDER SEDIMENT ROLLS AND BETWEEN DROP INLET FRAME AND GRATE, OVERLAPPING FABRIC TO NEXT STAKE.

SEDIMENT ROLL WITH WOOD STAKE

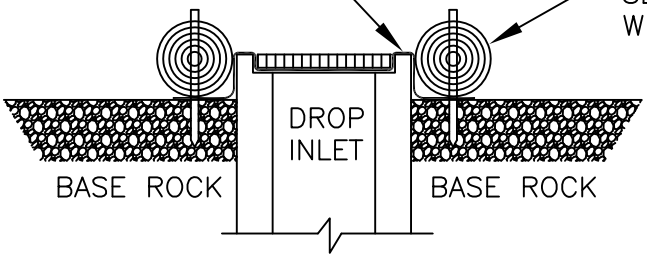

SECTION A–A

SEDIMENT ROLL DROP INLET SEDIMENT BARRIER

INSERT FILTER FABRIC BETWEEN DROP INLET FRAME AND GRATE

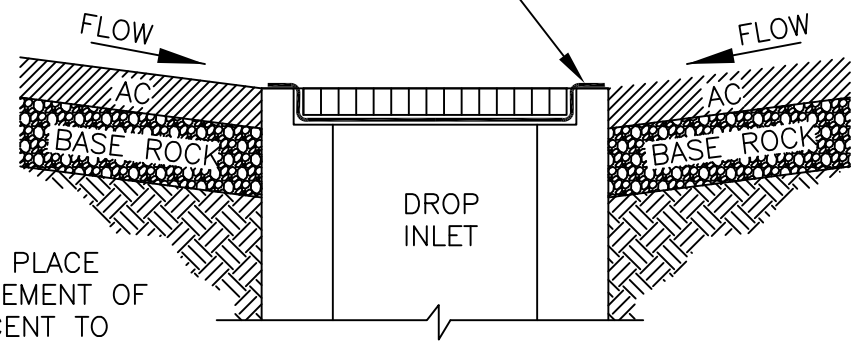

NOTE: TO BE IN PLACE FOLLOWING PLACEMENT OF PAVEMENT ADJACENT TO DROP INLET.

LOS ALTOS HILLS CALIFORNIA	TITLE FILTER FABRIC DROP INLET SEDIMENT BARRIER		
	ADOPTED BY CITY COUNCIL DATE: 12/07/2011	SCALE: NONE DATE: 11/18/2011 CHK: JMP	STANDARD DETAIL 24
	26379 FREMONT ROAD, LOS ALTOS HILLS, CA 94022 • Phone: (650) 941–7222		

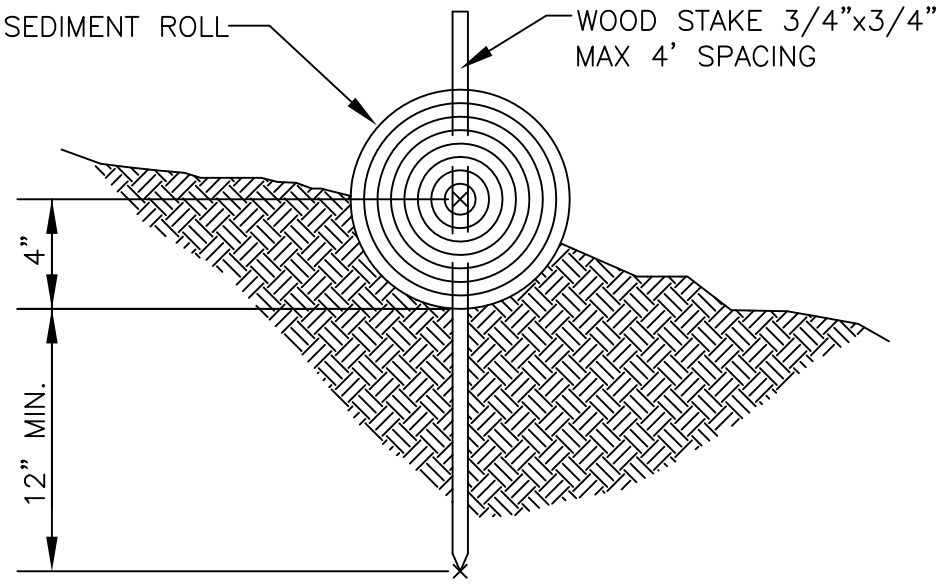

ENTRENCHMENT DETAIL IN SLOPE AREA
N.T.S.

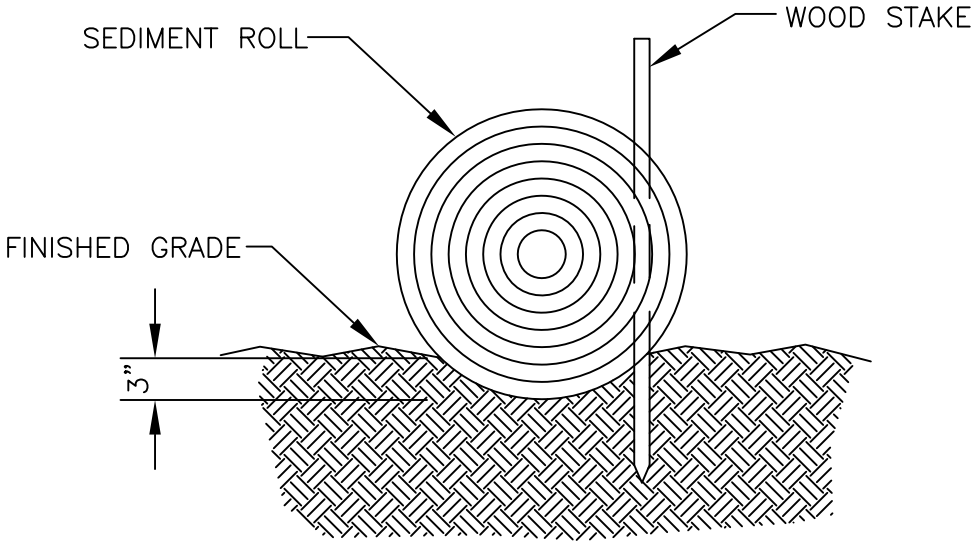

ENTRENCHMENT DETAIL IN FLAT AREA
N.T.S.

LOS ALTOS HILLS
CALIFORNIA

TITLE

SEDIMENT ROLL DETAIL

ADOPTED BY CITY COUNCIL DATE:	SCALE: NONE	STANDARD DETAIL
12/07/2011	DATE: 11/18/2011	25
	CHK: JMP	

26379 FREMONT ROAD, LOS ALTOS HILLS, CA 94022 • Phone: (650) 941-7222

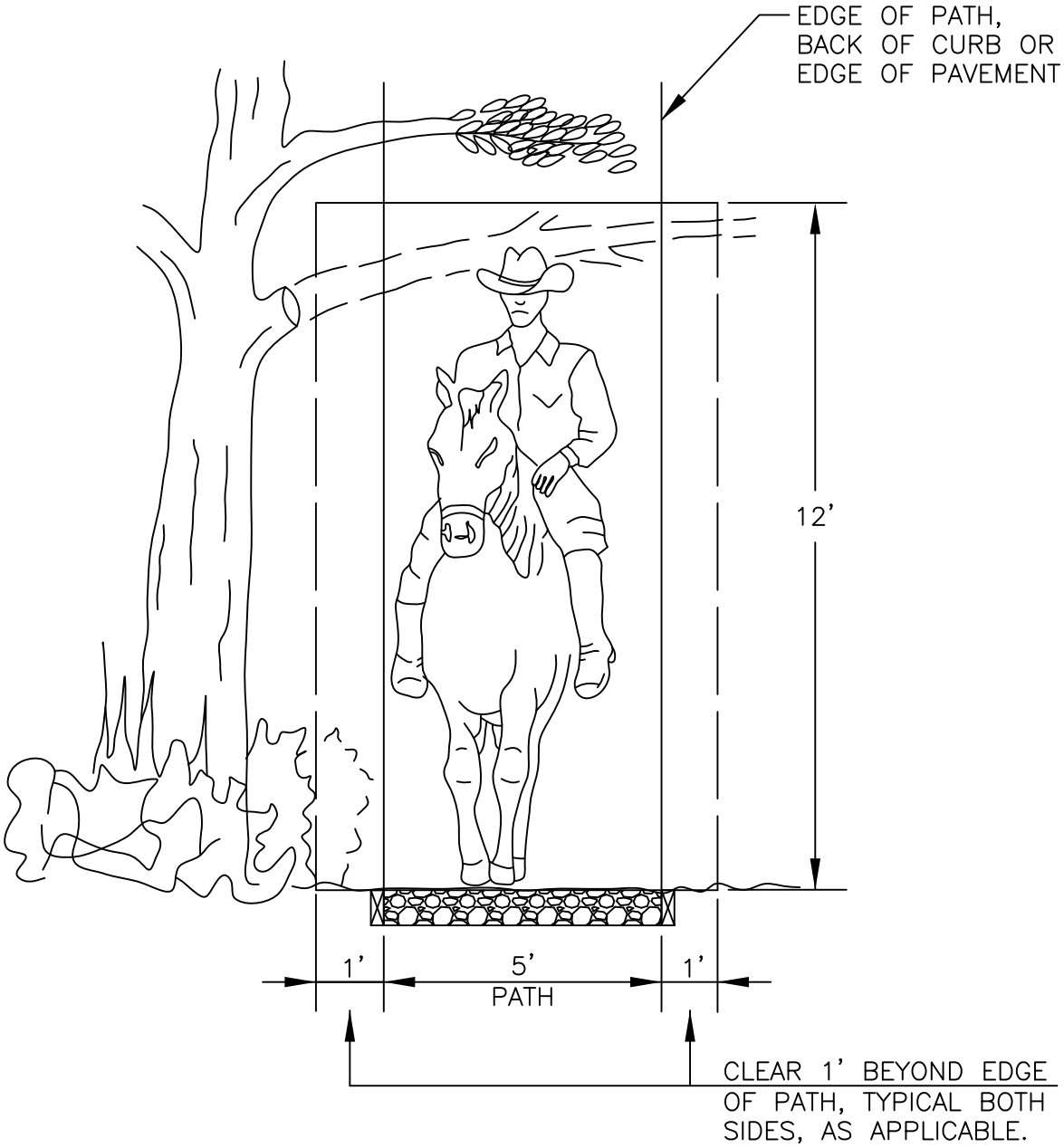

LOS ALTOS HILLS
CALIFORNIA

TITLE

VEGETATION CLEARING FOR PATHWAY

ADOPTED BY CITY COUNCIL DATE:	SCALE: NONE	STANDARD DETAIL
12/07/2011	DATE: 11/18/2011	26
	CHK: JMP	

26379 FREMONT ROAD, LOS ALTOS HILLS, CA 94022 • Phone: (650) 941-7222

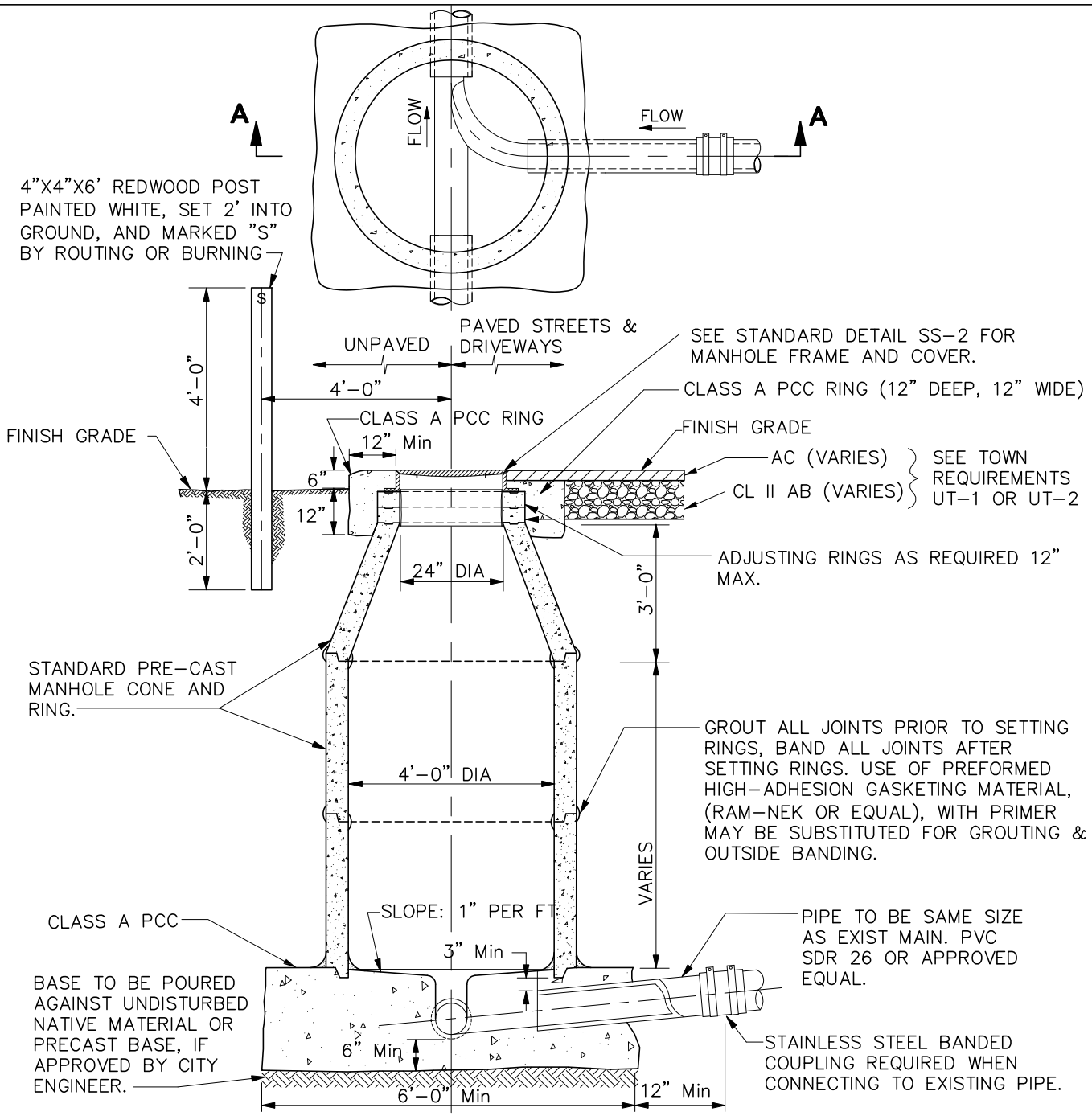

SECTION A-A

NOTES:

1. TERMINATE ALL PIPES FLUSH WITH INSIDE WALL OF MANHOLE.
2. CHANNELS TO BE FORMED TO APPROXIMATE WIDTH, SIZE AND SHAPE, OF PIPE AND FINISHED WITH GROUT. THICKNESS OF GROUT TO BE APPROXIMATELY ONE HALF INCH (1/2"). CONTINUE SLOPE OF PIPE THROUGH MANHOLE, 2% MINIMUM SLOPE.
3. WHEN FOUR (4) LINES COME INTO A MANHOLE, THE TWO LINES WHICH EMPTY INTO THE MAIN CHANNEL ARE TO BE STAGGERED AND NOT SET SO THEY WILL EMPTY IN AT THE SAME POINT.
4. ALL CONCRETE TO BE SIX (6) SACK.

LOS ALTOS HILLS CALIFORNIA	TITLE: SANITARY SEWER MANHOLE		
	ADOPTED BY CITY COUNCIL DATE: 1/13/2011	SCALE: NONE DATE: 1/4/2011 CHK: RC	STANDARD DETAIL SS-1
	26379 FREMONT ROAD, LOS ALTOS HILLS, CA 94022 • Phone: (650) 941-7222		

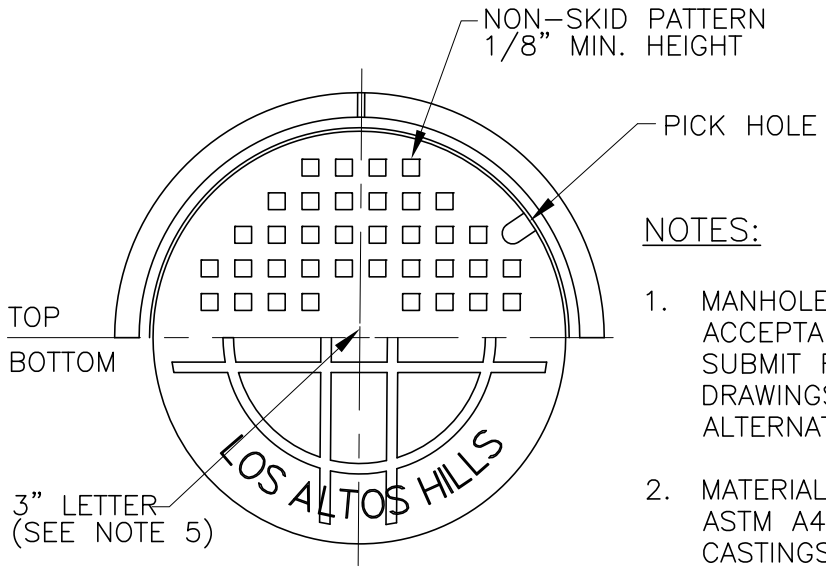

PLAN VIEW

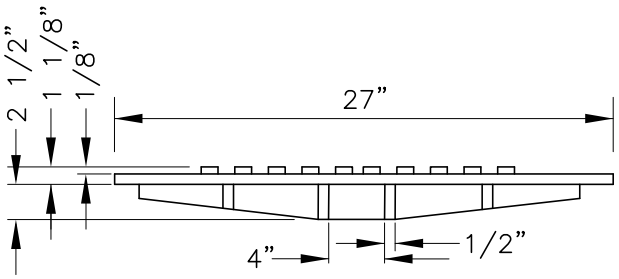

COVER

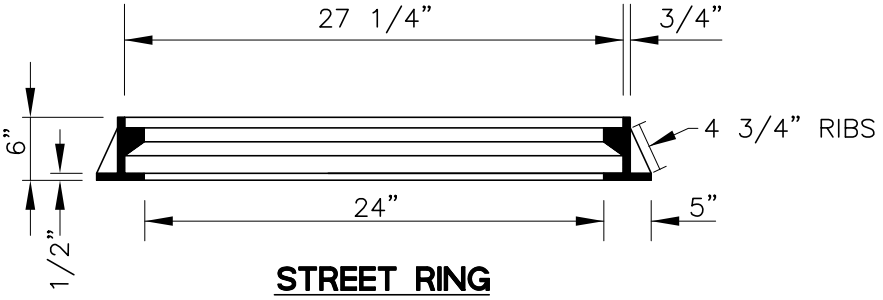

STREET RING

NOTES:

1. MANHOLE FRAME & COVER SHOWN ARE ACCEPTABLE CASTINGS. CONTRACTOR SHALL SUBMIT FOR APPROVAL COMPLETE DRAWINGS AND SPECIFICATIONS OF ALTERNATE CASTINGS PROPOSED.
2. MATERIAL SHALL BE GRAY CAST IRON PER ASTM A48 CLASS 35B. ALTERNATIVE CASTINGS SHALL BE APPROVED BY THE CITY ENGINEER.
3. STREET MANHOLE COVERS AND FRAMES SHALL BE DESIGNED TO SUPPORT A WHEEL LOAD OF 16,000 POUNDS PLUS 25% ALLOWANCE FOR IMPACT.
4. ALL BEARING SURFACES SHALL HAVE A MACHINED FIT.
5. COVERS SHALL BE INSCRIBED "LOS ALTOS HILLS" AND HAVE THE FOLLOWING LETTER DESIGNATIONS:
   S – SANITARY SEWER
   D – DRAINAGE
   NO LETTER – ALL OTHER USES

LOS ALTOS HILLS CALIFORNIA	TITLE: MANHOLE FRAME AND COVER		
	ADOPTED BY CITY COUNCIL DATE: 1/13/2011	SCALE: NONE DATE: 1/4/2011 CHK: RC	STANDARD DETAIL SS-2
	26379 FREMONT ROAD, LOS ALTOS HILLS, CA 94022 • Phone: (650) 941-7222		

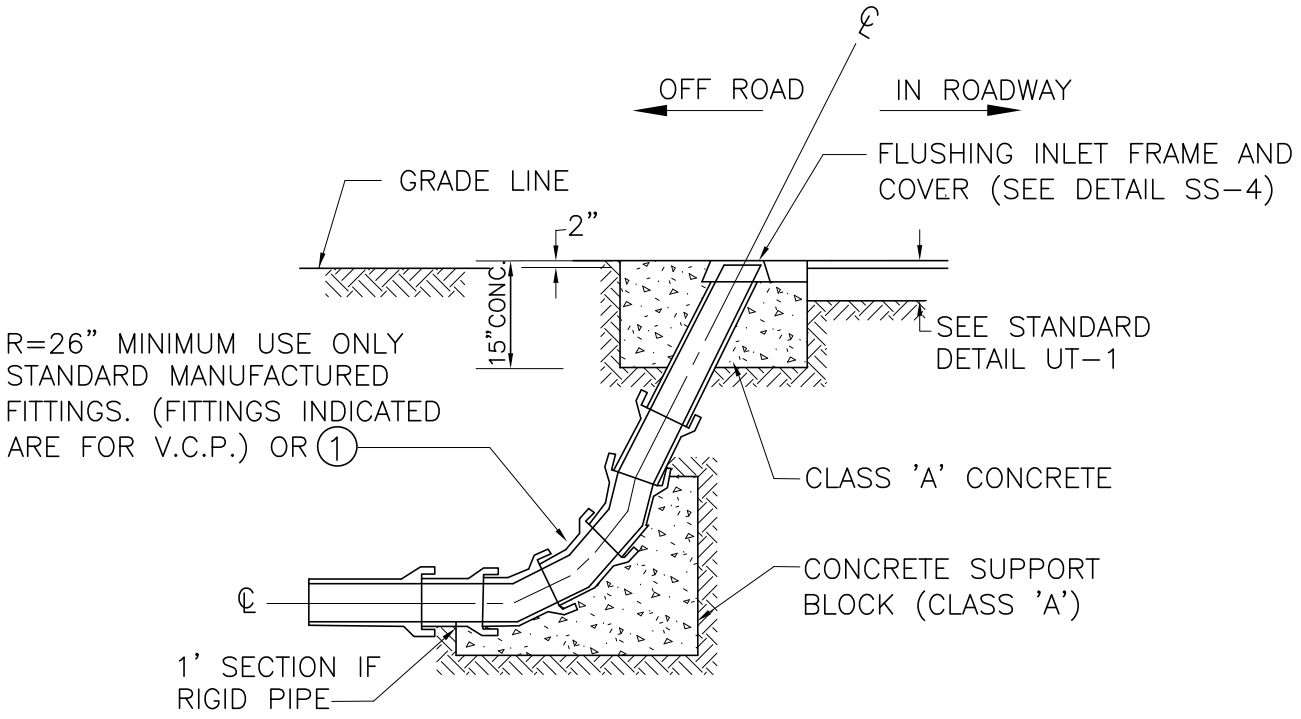

NOTE:

1 FOR P.V.C. PIPE, LARGE 90° MANUFACTURED SWEEPS MAY BE USED IF R=36" OR GREATER

LOS ALTOS HILLS CALIFORNIA	TITLE FLUSHING INLET		
	ADOPTED BY CITY COUNCIL DATE: 1/13/2011	SCALE: NONE DATE: 1/6/2011 CHK: RC	STANDARD DETAIL SS-3
	26379 FREMONT ROAD, LOS ALTOS HILLS, CA 94022 • Phone: (650) 941-7222		

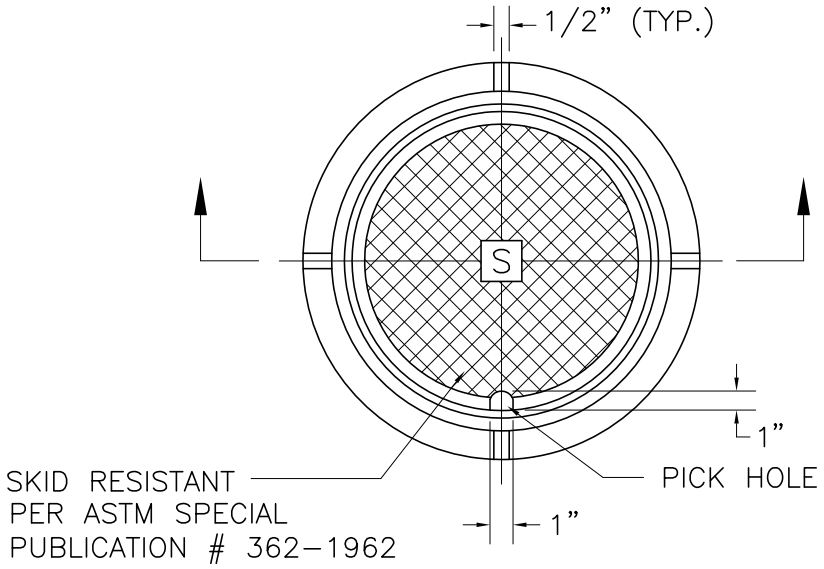

* ALL MATERIALS USED SHALL CONFORM TO ASTM SPEC. A-159-64T-G3000 OR U.S. GOV'T SPEC. QQ1-653

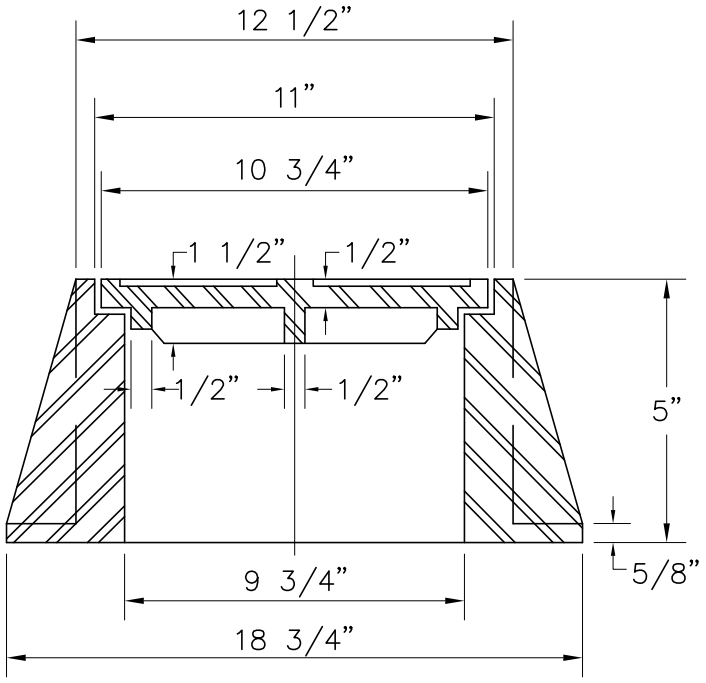

LOS ALTOS HILLS CALIFORNIA	TITLE FLUSHING INLET FRAME AND COVER		
	ADOPTED BY CITY COUNCIL DATE: 1/13/2011	SCALE: NONE DATE: 1/4/2011 CHK: RC	STANDARD DETAIL SS-4
	26379 FREMONT ROAD, LOS ALTOS HILLS, CA 94022 • Phone: (650) 941-7222		

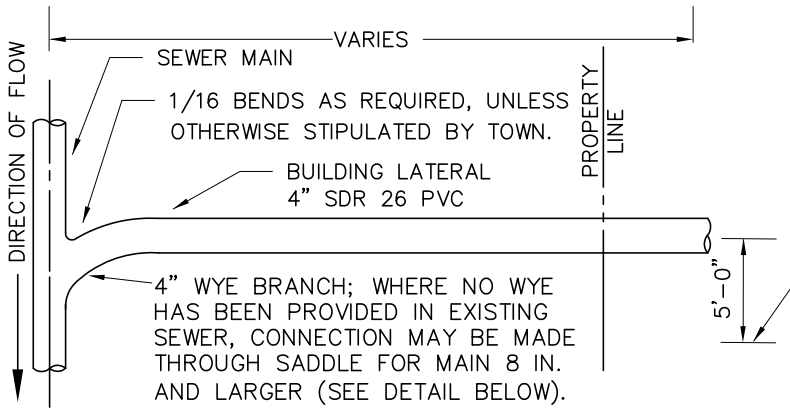

ON NEW CONSTRUCTION–LATERAL TO BE PLACED 5' FROM LOWER LOT LINE UNLESS OTHERWISE DIRECTED BY THE ENGINEER. THE WYE LATERAL AND PROPERTY LINE CLEAN OUT SHALL BE OF THE SAME MATERIAL

PLAN

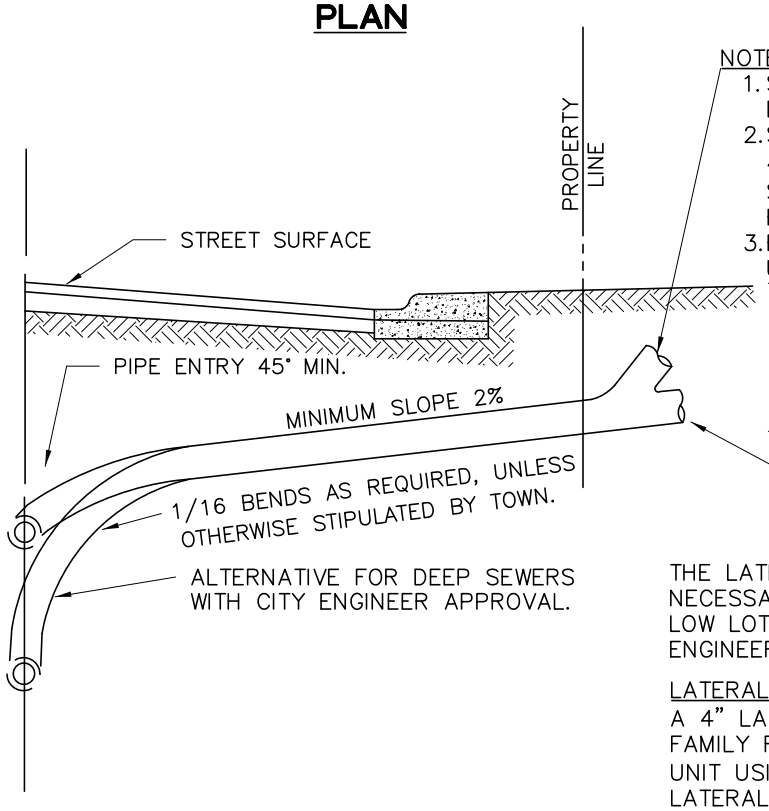

NOTE:
1. SEE TOWN OF LOS ALTOS HILLS CLEANOUT DETAIL SS–6.
2. SEWER LATERAL LOCATION TO BE MARKED BY 4"X4"X4" REDWOOD POST (PAINTED WHITE), SET 2' INTO GROUND, AND MARKED "S" BY ROUTING OR BURNING.
3. REFER TO STANDARD DETAILS UT–1 AND UT–2 FOR TRENCH BACKFILL REQUIREMENTS.

INSTALL STOPPER OR PLUG IF BUILDING LATERAL IS NOT CONNECTED AT THE SAME TIME

THE LATERAL SHALL BE LOWER WHERE NECESSARY TO SERVE EXISTING PLUMBING OR LOW LOTS OR WHEN DIRECTED BY THE ENGINEER.

LATERAL SIZES

A 4" LATERAL CAN BE USED FOR A SINGLE FAMILY RESIDENCE OR A SFR WITH A SECOND UNIT USING "WYE" CONNECTION. A MINIMUM 6" LATERAL SHALL BE USED FOR ALL OTHER DEVELOPMENTS.

PROFILE

METHOD OF ATTACHING LATERAL TO EXISTING SEWER WHERE NO WYE HAS BEEN PROVIDED

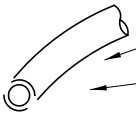

1/16 BENDS AS REQUIRED

A. EXISTING MAIN < 8": FOR MEANS BY WHICH CONNECTION IS TO BE MADE TO MAIN LINE SEE DETAIL SS–7.
B. EXISTING MAIN 10"–18": CONNECTION BY MEANS OF AN APPROVED SADDLE "TEE".
C. EXISTING MAIN >18": CONNECTION SHALL BE AT A MANHOLE UNLESS OTHERWISE APPROVED BY THE CITY ENGINEER.
D. CONNECTIONS TO TOWN MAIN REQUIRED AN INSPECTION BY PUBLIC WORKS.

LOS ALTOS HILLS CALIFORNIA	TITLE: SANITARY SEWER LATERAL		
	ADOPTED BY CITY COUNCIL DATE: 1/13/2011	SCALE: NONE DATE: 1/6/2011 CHK: RC	STANDARD DETAIL SS–5
	26379 FREMONT ROAD, LOS ALTOS HILLS, CA 94022 • Phone: (650) 941–7222		

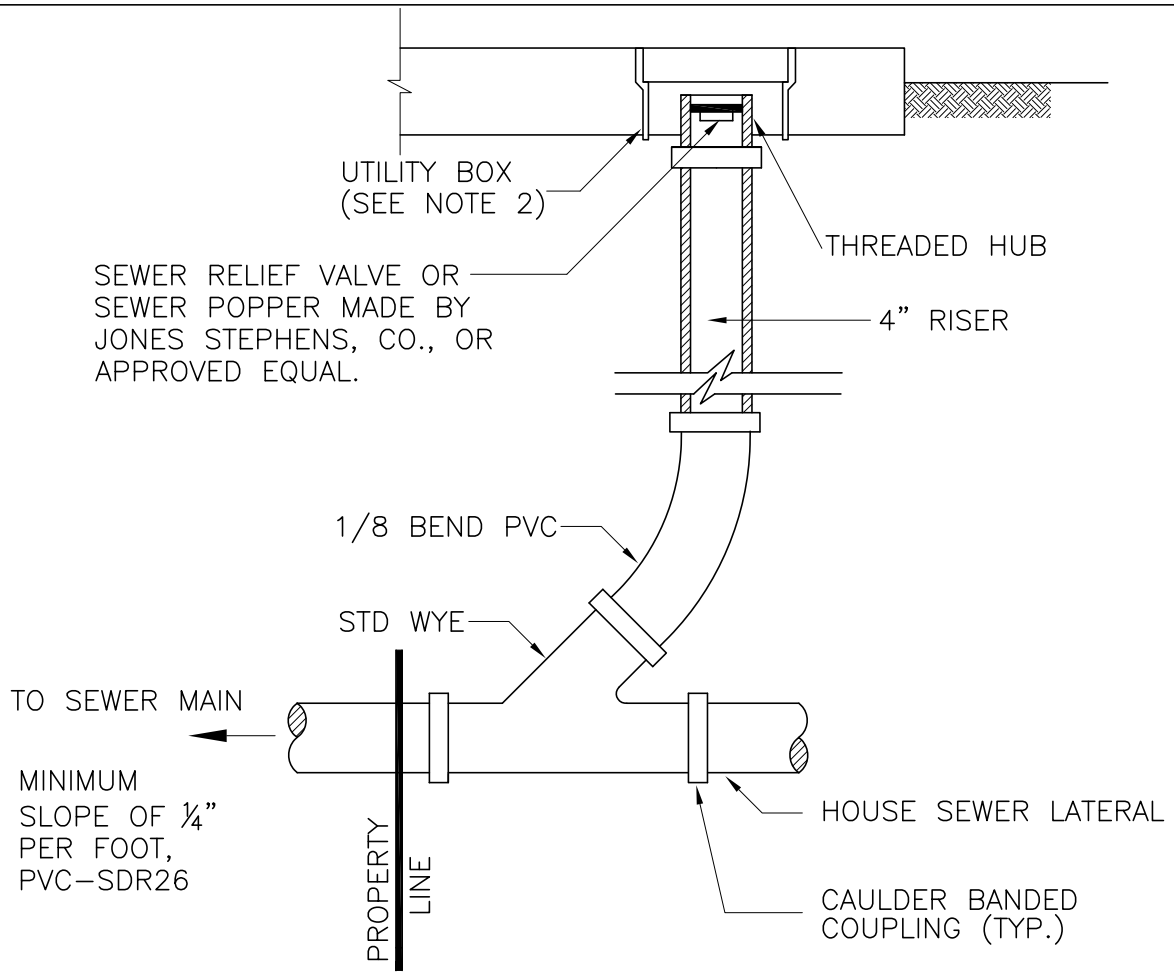

NOTE:

1. SEWER LATERAL FROM THE HOUSE SHALL BE CONSTRUCTED PER BUILDING DEPARTMENT REQUIREMENTS.

2. IN DRIVEWAY OR PLANTED AREA, USE CHRISTY TYPE G5 TRAFFIC BOX WITH G5C LID OR EQUAL. LID SHALL CONTAIN THE LETTERS "SEWER".

3. WHEN INSTALLED IN PLANTED AREAS, CLEANOUT BOX SHALL BET SET A MINIMUM OF 1-1/2" ABOVE GRADE.

4. OWNER IS RESPONSIBLE FOR MAINTENANCE, REPAIR, AND REPLACE OF LATERAL, FROM THE BUILDUNG TO THE MAIN CONNECTION INCLUDING THE WYE AT THE MAIN, SEWER RELIEVE VALVE AND BACKFLOW PREVENTOR.

5. INSTALL BACKFLOW PREVENTOR "CLEAN CHECK" EXTENDABLE BACKWATER VALVE, OR APPROVED EQUAL, UPSTREAM OF PROPERTY LINE CLEANOUT.

LOS ALTOS HILLS CALIFORNIA	TITLE VERTICAL SEWER LATERAL CLEANOUT		
	ADOPTED BY CITY COUNCIL DATE: 1/13/2011	SCALE: NONE DATE: 1/6/2011 CHK: RC	STANDARD DETAIL SS-6
	26379 FREMONT ROAD, LOS ALTOS HILLS, CA 94022 • Phone: (650) 941-7222		

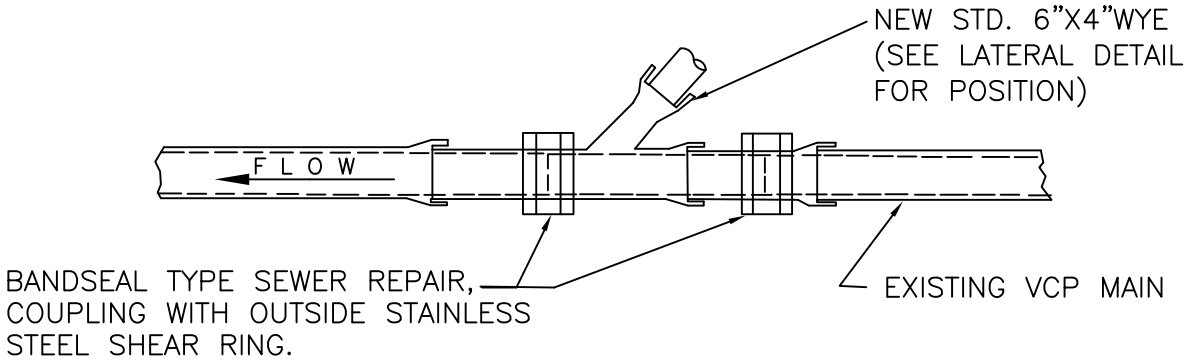

NOTE:
THE NEWLY INSTALLED WYE SHALL BE OF THE SAME MATERIAL AS THE EXISTING MAIN.

VITRIFIED CLAY (VCP)

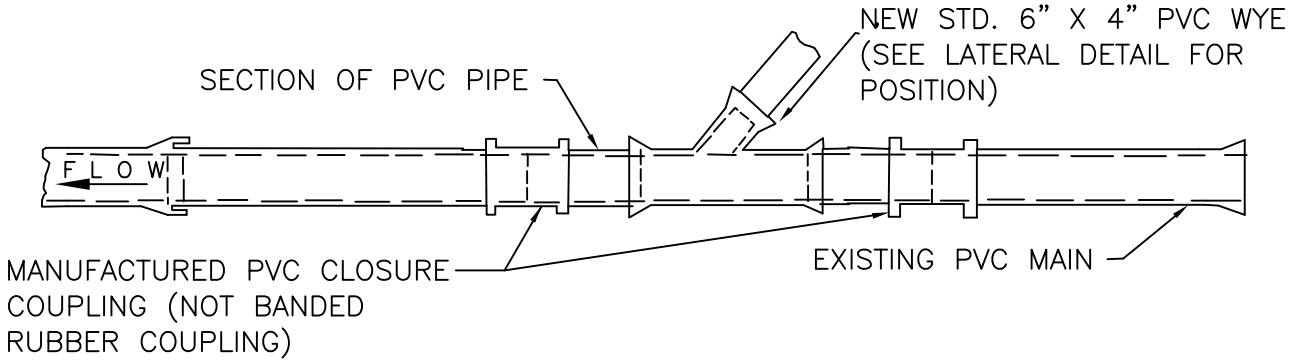

NOTE:
ALL PVC, PIPE AND FITTINGS SHALL BE SDR 26 AND SHALL HAVE RUBBER GASKETED JOINTS. SOLVENT WELDED JOINTS SHALL NOT BE ALLOWED

POLYVINYL CHLORIDE PIPE (PVC)

NOTES:

1. LATERAL CONNECTION INSTALLATION ON NEWLY INSTALLED PIPE WILL BE AS DIRECTED BY THE DEPARTMENT OF PUBLIC WORKS.

2. IF THE EXISTING MAIN IS HDPE, LATERAL CONNECTION SHALL BE MADE BY HEAT FUSION. THE MATERIAL OF THE LATERAL BETWEEN THE MAIN AND PROPERTY LINE CLEANOUT SHALL BE THE SAME AS THE EXISTING MAIN.

LOS ALTOS HILLS CALIFORNIA	TITLE LATERAL CONNECTION TO EXISTING SEWER MAIN		
	ADOPTED BY CITY COUNCIL DATE: 12/07/2011	SCALE: NONE DATE: 11/18/2011 CHK: JMP	STANDARD DETAIL SS-7
	26379 FREMONT ROAD, LOS ALTOS HILLS, CA 94022 • Phone: (650) 941-7222		

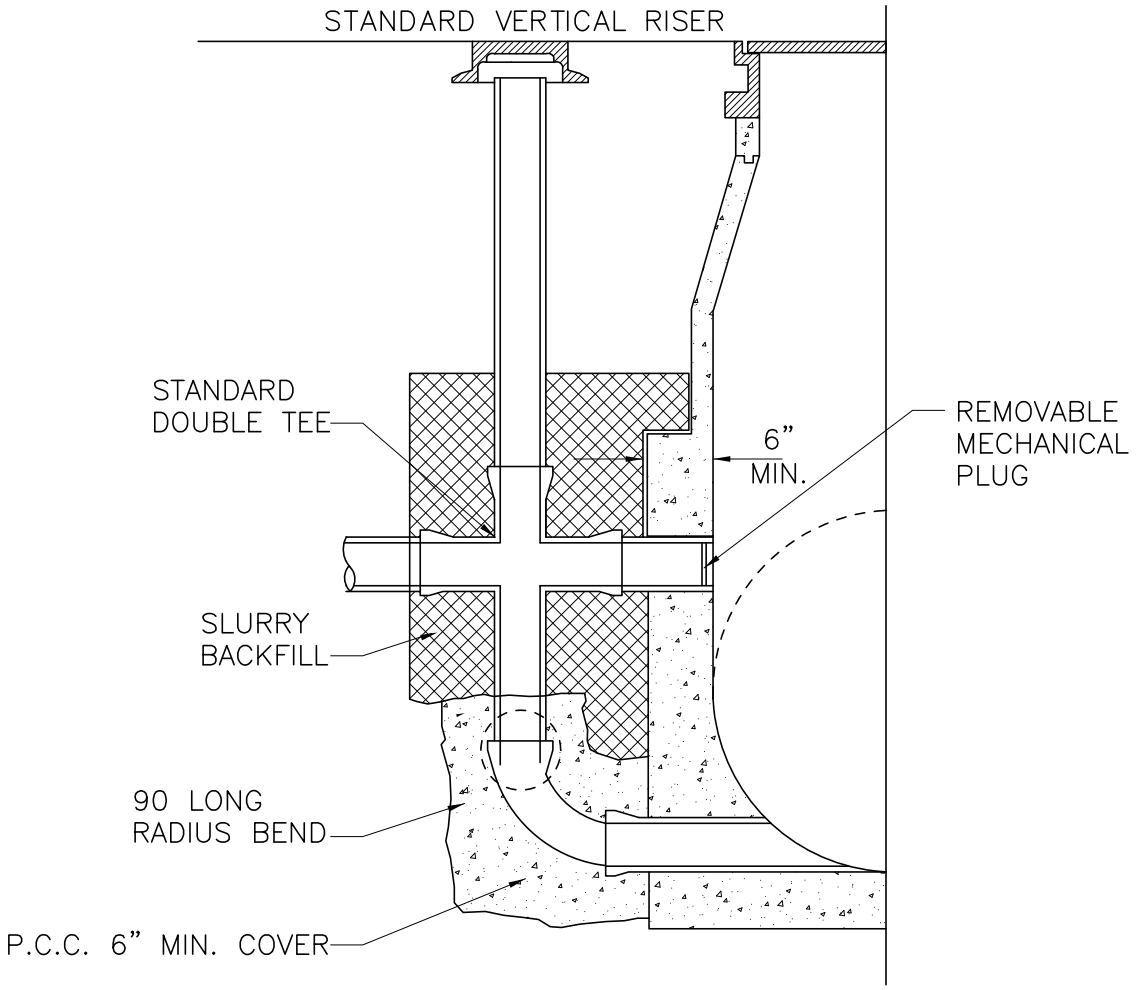

LOS ALTOS HILLS
CALIFORNIA

TITLE

DROP MANHOLE CONNECTION

ADOPTED BY CITY COUNCIL DATE:	SCALE: NONE	STANDARD DETAIL
1/13/2011	DATE: 1/4/2011	SS-8
	CHK: RC	

26379 FREMONT ROAD, LOS ALTOS HILLS, CA 94022 • Phone: (650) 941-7222

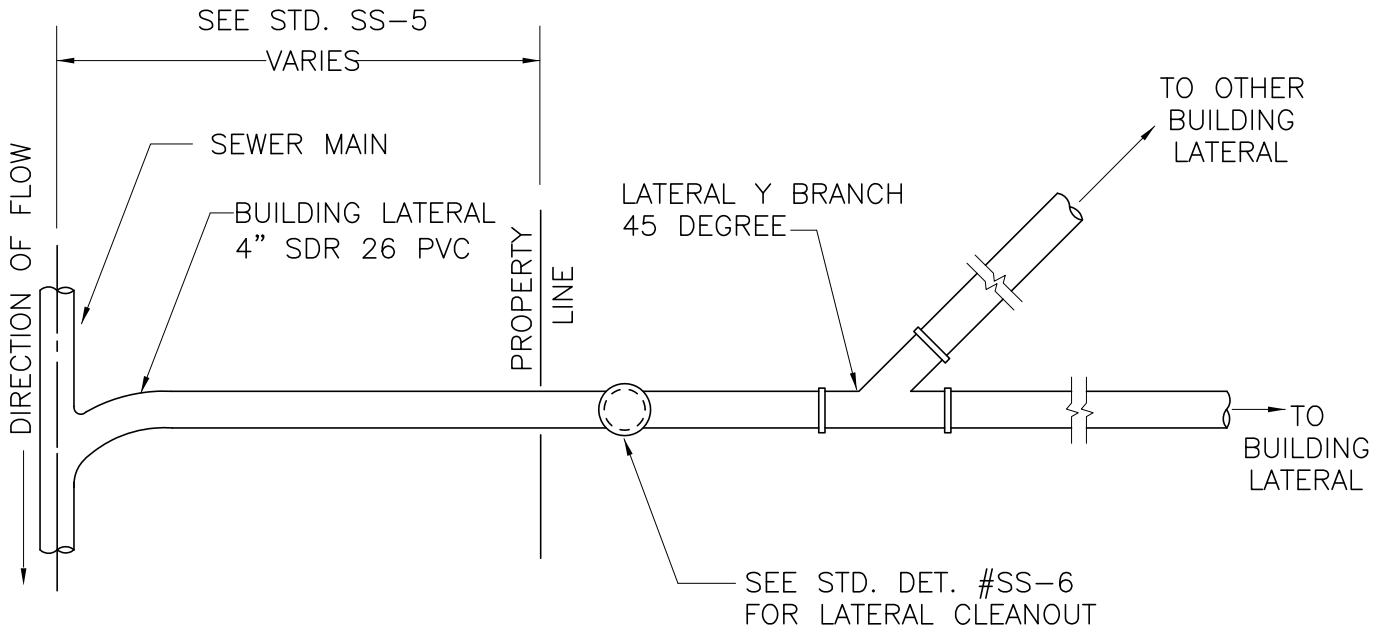

PLAN

NOTE:

SEPARATE HOUSES, BUILDINGS, AND LIVING QUARTERS ON THE SAME PROPERTY ARE TO BE PROVIDED WITH SEWER SERVICE THROUGH A SINGLE SERVICE CONNECTION USING A 45-DEGREE "Y" BRANCH LATERAL TO SUPPLY THE ENTIRE PREMISES, OR ANY COMBINATION THEREOF. A SEPARATE SEWER LATERAL MAY BE REQUIRED/APPROVED BY THE CITY ENGINEER.

LOS ALTOS HILLS CALIFORNIA	TITLE WYE BRANCH LATERAL		
	ADOPTED BY CITY COUNCIL DATE: 1/13/2011	SCALE: NONE DATE: 1/6/2011 CHK: RC	STANDARD DETAIL SS-9
	26379 FREMONT ROAD, LOS ALTOS HILLS, CA 94022 • Phone: (650) 941-7222		

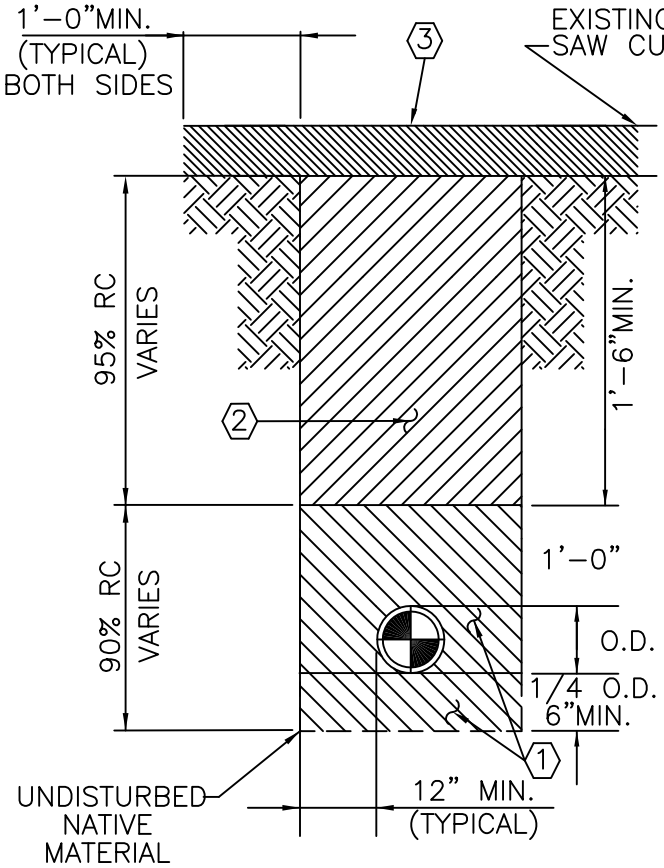

NOTES:

1. RELATIVE COMPACTION (RC) SHALL MEAN COMPACTION AS DETERMINED BY CALIFORNIA COMPACTION TEST METHOD OR BY ASTM METHODS.
2. ASPHALT CONCRETE TO BE TYPE B, 1/2" MAX. AGGREGATE PER SECTION 39 OF STATE STANDARD SPECIFICATIONS.
3. ALL BACKFILL SHALL BE PLACED AND COMPACTED IN 6" MAXIMUM LIFTS.
4. CLASS 1 BEDDING AND CLASS 2 AGGREGATE BASE PER THE STATE STANDARD SPECIFICATIONS.
5. IF THE EDGE OF THE TRENCH FALLS WITHIN 3' OF THE GUTTER OR SHOULDER EDGE, THE ENTIRE PAVEMENT SHALL BE REMOVED.

LEGEND:

1. CLASS 1 BEDDING (3/4" DRAIN ROCK)
2. CLASS 2 AGGREGATE BASE, 3/4" MAX.
3. 6" ASPHALT CONCRETE OR MATCH EXISTING DEPTH, WHICHEVER IS GREATER. AC SHALL BE PLACED IN 4" LIFTS MAX.
4. APPLY TACK COAT ON SAW CUT EDGES PER SECTION 94 OF STATE SPECIFICATIONS.

LOS ALTOS HILLS CALIFORNIA	TITLE: BACKFILL DETAIL – STREET		
	ADOPTED BY CITY COUNCIL DATE: 12/07/2011	SCALE: NONE DATE: 11/18/2011 CHK: JMP	STANDARD DETAIL UT–1
	26379 FREMONT ROAD, LOS ALTOS HILLS, CA 94022 • Phone: (650) 941–7222		

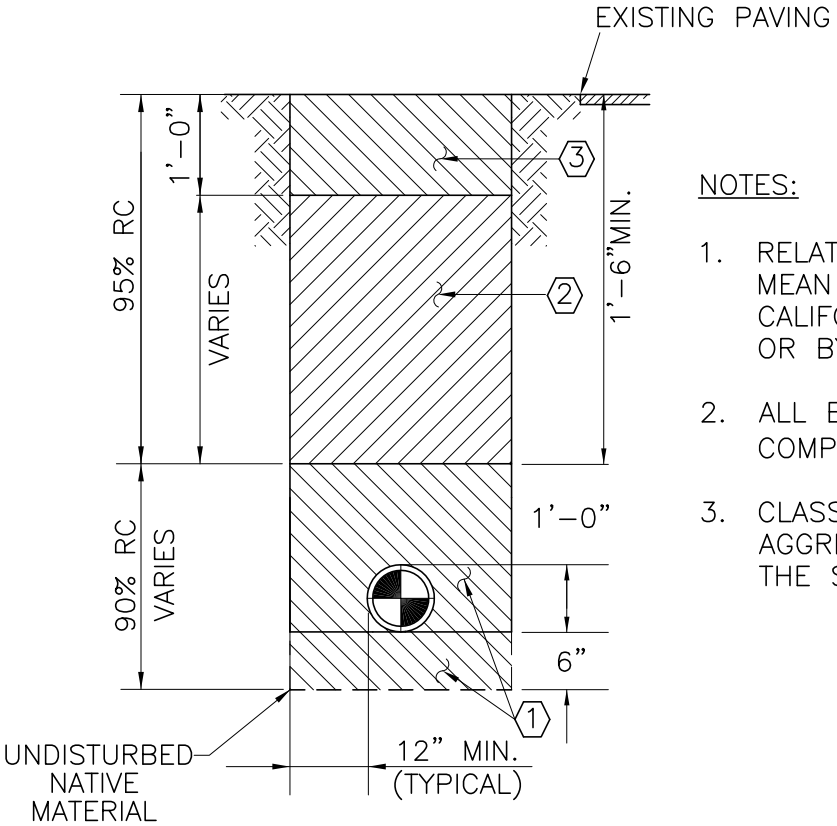

NOTES:

1. RELATIVE COMPACTION (RC) SHALL MEAN COMPACTION AS DETERMINED BY CALIFORNIA COMPACTION TEST METHOD OR BY ASTM METHODS.
2. ALL BACKFILL SHALL BE PLACED AND COMPACTED IN 6" MAXIMUM LIFTS.
3. CLASS 1 BEDDING AND CLASS 2 AGGREGATE BASE PER SECTION 26 OF THE STATE STANDARD SPECIFICATIONS.

LEGEND:

(1) CLASS 1 BEDDING (3/4" DRAIN ROCK)

(2) NATIVE BACKFILL MATERIAL

(3) WITHIN TOWN PATHWAYS, USE 6" STEVENS CREEK QUARRY CRUSHER FINES OVER 6" DRAIN ROCK (1/2") OR EQUAL AS APPROVED BY THE CITY ENGINEER. WITHIN SHOULDERS, USE 12" CLASS 2 AGGREGATE BASE, 3/4" MAXIMUM.

LOS ALTOS HILLS CALIFORNIA	TITLE BACKFILL DETAIL – SHOULDER/EASEMENT		
	ADOPTED BY CITY COUNCIL DATE: 1/13/2011	SCALE: NONE DATE: 1/4/2011 CHK: RC	STANDARD DETAIL UT–2
	26379 FREMONT ROAD, LOS ALTOS HILLS, CA 94022 • Phone: (650) 941–7222		

Appendix E
Overflow Emergency Response Plan Element
Supporting Documents

Appendix E Documents

1. Town of Los Altos Hills Emergency Overflow Response Plan prepared by DKF Solutions Group, revised by Town of Los Altos Hills on August 1, 2014

2. WEST BAY Standard Operating Guidelines for Sanitary Sewer Overflow Response

3. Standard Operating Procedures for Purissima Pump Station

4. Standard Operation Procedures for O'Keefe Pump Station

5. Town of Los Altos Hills Water Quality Monitoring Program

6. BACWA Flyer for Plumber and Building Contractor Outreach

7. SSO Technical Report Template

Appendix E – Document 1
Town of Los Altos Hills Emergency Overflow Response Plan

Town of Los Altos Hills

Overflow Emergency Response Plan

Effective Date: _____

Revised Date: _____

Approved by: _____

Signature: _____

Date: _____

Prepared by David Patzer, DKF Solutions Group
(707) 373-9709 dpatzer@dkfsolutions.com

Copyright © 2004-2014 DKF Solutions Group, LLC. All rights reserved.

Table of Contents

Sanitary Sewer Overflow Emergency Response Plan (OERP)

(ref. SWRCB Order No. 2006-0003-DWQ Element VI)

1. Purpose
2. Policy
3. Definitions as used in this OERP
4. Regulatory Requirements for OERP Element of SSMP
5. Goals
6. Sanitary Sewer Overflow (SSO) Detection and Notification
7. SSO Response Procedures
8. Recovery and Cleanup
9. Water Quality
10. Sewer Backup Into/Onto Private Property Claims Handling Policy
11. Notification, Reporting, Monitoring and Recordkeeping Requirements
12. Post SSO Event Debriefing
13. Failure Analysis Investigation
14. SSO Response Training
15. High Priority Assets
16. Authority
17. References

Appendix A: Regulatory Notifications Packet

Instructions..... Packet Envelope
Regulatory Reporting Guide **A**-1
Category 1 SSO Reporting Checklist..... -2a
Category 2 and 3 SSO Reporting Checklist..... -2b
Regional Water Quality Control Board Notification Fax ..... -3

Appendix B: Construction Contract Appendix A - “Sanitary Overflows”

© 2004-2014 DKF Solutions Group, LLC. All rights reserved.

Sanitary Sewer Overflow Emergency Response Plan

(ref. SWRCB Order No. 2006-0003-DWQ Element VI)

1. Purpose

The purpose of the Town of Los Altos Hills's Overflow Emergency Response Plan (OERP) is to support an orderly and effective response to Sanitary Sewer Overflows (SSOs). The OERP provides guidelines for Town personnel to follow in responding to, cleaning up, and reporting SSOs that may occur within the Town's service area. This OERP satisfies the SWRCB Statewide General Waste Discharge Requirements (GWDR), which require wastewater collection agencies to have an Overflow Emergency Response Plan.

2. Policy

The Town's employees are required to report all wastewater overflows found and to take the appropriate action to secure the wastewater overflow area, properly report to the appropriate regulatory agencies, relieve the cause of the overflow, and ensure that the affected area is cleaned as soon as possible to minimize health hazards to the public and protect the environment. The Town's goal is to respond to sewer system overflows as soon as possible following notification. The Town will follow reporting procedures in regards to sewer spills as set forth by the San Francisco Regional Water Quality Control Board (*SFRWQCB)* and the California State Water Resources Control Board (*SWRCB)***.**

3. Definitions As Used In This OERP

CALIFORNIA INTEGRATED WATER QUALITY SYSTEM (CIWQS): Refers to the State Water Resources Control Board online electronic reporting system that is used to report SSOs, certify completion of the SSMP, and provide information on the sanitary sewer system.

FROG – Fats, Roots, Oils, and Grease: FOG refers to fats, oils, and grease typically associated with food preparation and cooking activities that can cause blockages in the sanitary sewer system. Tree root invasion (R) presents an additional problem. If a mat of root hair forms in the sewer line it slows the flow of wastewater and exacerbates the rate of accumulation of FOG materials.

LEGALLY RESPONSIBLE OFFICIAL (LRO): Refers to an individual who has the authority to certify reports and other actions that are submitted through CIWQS.

MAINLINE SEWER: Refers to Town wastewater collection system piping that is not a private lateral connection to a user.

MAINTENANCE HOLE OR MANHOLE: Refers to an engineered structure that is intended to provide access to a sanitary sewer for maintenance and inspection.

NOTIFICATION OF AN SSO: Refers to the time at which the Town becomes aware of an SSO event through observation or notification by the public or other source.

NUISANCE - California Water Code section 13050, subdivision (m), defines nuisance as anything that meets all of the following requirements:

a. Is injurious to health, or is indecent or offensive to the senses, or an obstruction to the free use of property, so as to interfere with the comfortable enjoyment of life or property.

© 2004-2014 DKF Solutions Group, LLC. All rights reserved.

b. Affects at the same time an entire community or neighborhood, or any considerable number of persons, although the extent of the annoyance or damage inflicted upon individuals may be unequal.

c. Occurs during, or as a result of, the treatment or disposal of wastes.

PREVENTATIVE MAINTENANCE: Refers to maintenance activities intended to prevent failures of the wastewater collection system facilities (e.g. cleaning, CCTV, inspection).

PRIVATE LATERAL SEWAGE DISCHARGES – Sewage discharges that are caused by blockages or other problems within a privately owned lateral.

SANITARY SEWER BACKUP (BACKUP) – When blockages or flow conditions cause wastewater to backup into buildings and on private property.

SANITARY SEWER OVERFLOW (SSO) - Any overflow, spill, release, discharge or diversion of untreated or partially treated wastewater from a sanitary sewer system. SSOs include:

(i) Overflows or releases of untreated or partially treated wastewater that reach waters of the United States;

(ii) Overflows or releases of untreated or partially treated wastewater that do not reach waters of the United States; and

(iii) Wastewater backups into buildings and on private property that are caused by blockages or flow conditions within the publicly owned portion of a sanitary sewer system.

SSOs that include multiple appearance points resulting from a single cause will be considered one SSO for documentation and reporting purposes in CIWQS.

NOTE: Wastewater backups into buildings caused by a blockage or other malfunction of a building lateral that is privately owned are not SSOs.

SSO Categories:

Category 1: Discharge of untreated or partially treated wastewater of any volume resulting from a sanitary sewer system failure or flow condition that either:

- Reaches surface water and/or drainage channel tributary to a surface water; or
- Reached a Municipal Separate Storm Sewer System (MS4) and was not fully captured and returned to the sanitary sewer system or otherwise captured and disposed of properly.

Category 2: Discharge of untreated or partially treated wastewater greater than or equal to 1,000 gallons resulting from a sanitary sewer system failure or flow condition that either:

- Does not reach surface water, a drainage channel, or an MS4, or
- The entire SSO discharged to the storm drain system was fully recovered and disposed of properly.

Category 3: All other discharges of untreated or partially treated wastewater resulting from a sanitary sewer system failure or flow condition.

SANITARY SEWER SYSTEM: Any publicly-owned system of pipes, pump stations, sewer lines, or other conveyances, upstream of a wastewater treatment plant headworks used to collect and convey wastewater to the publicly owned treatment facility. Temporary storage and conveyance facilities (such as vaults, temporary

© 2004-2014 DKF Solutions Group, LLC. All rights reserved.

piping, construction trenches, wet wells, impoundments, tanks, etc.) are considered to be part of the sanitary sewer system, and discharges into these temporary storage facilities are not considered to be SSOs.

SENSITIVE AREA: Refers to areas where an SSO could result in a fish kill or pose an imminent or substantial danger to human health (e.g. parks, aquatic habitats, etc.)

SEWER SERVICE LATERAL: Refers to the piping that conveys sewage from the building to the Town's wastewater collection system.

UNTREATED OR PARTIALLY TREATED WASTEWATER: Any volume of waste discharged from the sanitary sewer system upstream of a wastewater treatment plant headworks.

WATERS OF THE STATE*:* Waters of the State (or waters of the United States) means any surface water, including saline waters, within the boundaries of California. In case of a sewage spill, storm drains are considered to be waters of the State unless the sewage is completely contained and returned to the wastewater collection system and that portion of the storm drain is cleaned.

4. State Regulatory Requirements for Element 6, Overflow Emergency Response Plan

GWDR Requirement

The collection system agency shall develop and implement an overflow emergency response plan that identifies measures to protect public health and the environment. At a minimum, this plan must include the following:

(a) Proper notification procedures so that the primary responders and regulatory agencies are informed of all SSOs in a timely manner;
(b) A program to ensure appropriate response to all overflows;
(c) Procedures to ensure prompt notification to appropriate regulatory agencies and other potentially affected entities (e.g. health agencies, regional water boards, water suppliers, etc.) of all SSOs that potentially affect public health or reach the waters of the State in accordance with the Monitoring and Reporting Program (MRP). All SSOs shall be reported in accordance with this MRP, the California Water Code, other State Law, and other applicable Regional Water Board Waste Discharge Requirements or National Pollutant Discharge Elimination System (NPDES) permit requirements. The Sewer System Management Plan should identify the officials who will receive immediate notification;
(d) Procedures to ensure that appropriate staff and contractor personnel are aware of and follow the Emergency Response Plan and are appropriately trained;
(e) Procedures to address emergency operations, such as traffic and crowd control and other necessary response activities; and
(f) A program to ensure that all reasonable steps are taken to contain untreated wastewater and prevent discharge of untreated wastewater to Waters of the United States and minimize or correct any adverse impact on the environment resulting from the SSOs, including such accelerated or additional monitoring as may be necessary to determine the nature and impact of the discharge.

The Sewer System Management Plan and critical supporting documents are made available to the public through submission of an electronic copy to the State Water Resources Control Board.

5. Goals

The Town's goals with respect to responding to SSOs are:

- Work safely;
- Respond quickly to minimize the volume of the SSO;

© 2004-2014 DKF Solutions Group, LLC. All rights reserved.

- Eliminate the cause of the SSO;
- Prevent sewage system overflows or leaks from entering the storm drain system or receiving waters to the maximum extent practicable;
- Contain the spilled wastewater to the extent feasible;
- Minimize public contact with the spilled wastewater;
- Mitigate the impact of the SSO;
- Meet the regulatory reporting requirements;
- Evaluate the causes of failure related to certain SSOs; and
- Revise response procedures resulting from the debrief and failure analysis of certain SSOs.

6. SSO Detection and Notification

ref. SWRCB Order No. 2006-0003-DWQ VI(a)

The processes that are employed to notify the Town of the occurrence of an SSO include: observation by the public, receipt of an alarm, or observation by Town staff during the normal course of their work.

The Town operates two wastewater lift stations. In the event of any pump failure, the high level sensor activates the SCADA alarm system and the Town is contacted. To prevent overflow, wastewater from the wet well can either be pumped into a vacuum truck for disposal to a nearby sanitary sewer manhole, or bypassed around the station into the sanitary sewer system.

6.1 PUBLIC OBSERVATION

Public observation is the most common way that the Town is notified of blockages and spills. Contact numbers and information for reporting sewer spills and backups are in the phone book and on the Town's website: www.losaltoshills.ca.gov. The Town's telephone number for reporting sewer problems is (650) 941-7222.

Normal Work Hours
When a report of a sewer spill or backup is made during normal work hours, Town Hall front desk staff receives the call and forwards it to the Senior Engineer or, if not available, the Public Works Director. The details of the sewer complaint are collected and then, depending on the nature of the service request, the Senior Engineer will dispatch Town staff to research the issue. If it is a sewer related issue, then the details of the service request forwarded to West Bay Sanitary District, the Town's maintenance contractor. They will note the caller details on the report provided to the Town following the response to the complaint.

After Hours
After hours callers are directed to contact County Communications Dispatch. Dispatch will notify the on-call Town staff. If necessary, or if Town staff are not reachable, the on-call employee from West Bay Sanitary District will be notified.

When calls are received, either during normal work hours or after hours, the individual receiving the call will collect the following information:

- Time and date of call
- Specific location of potential problem
- Nature of call
- In case of SSO, estimated start time of overflow
- Caller's name and telephone number
- Caller's observation (e.g., odor, duration, location on property, known impacts, indication if surface water impacted, appearance at cleanout or manhole)
- Other relevant information

© 2004-2014 DKF Solutions Group, LLC. All rights reserved.

The following is an overview of receiving a sewage overflow or backup report:

Figure 6.1 Overview of Receiving a Sewage Overflow or Backup Report Procedure

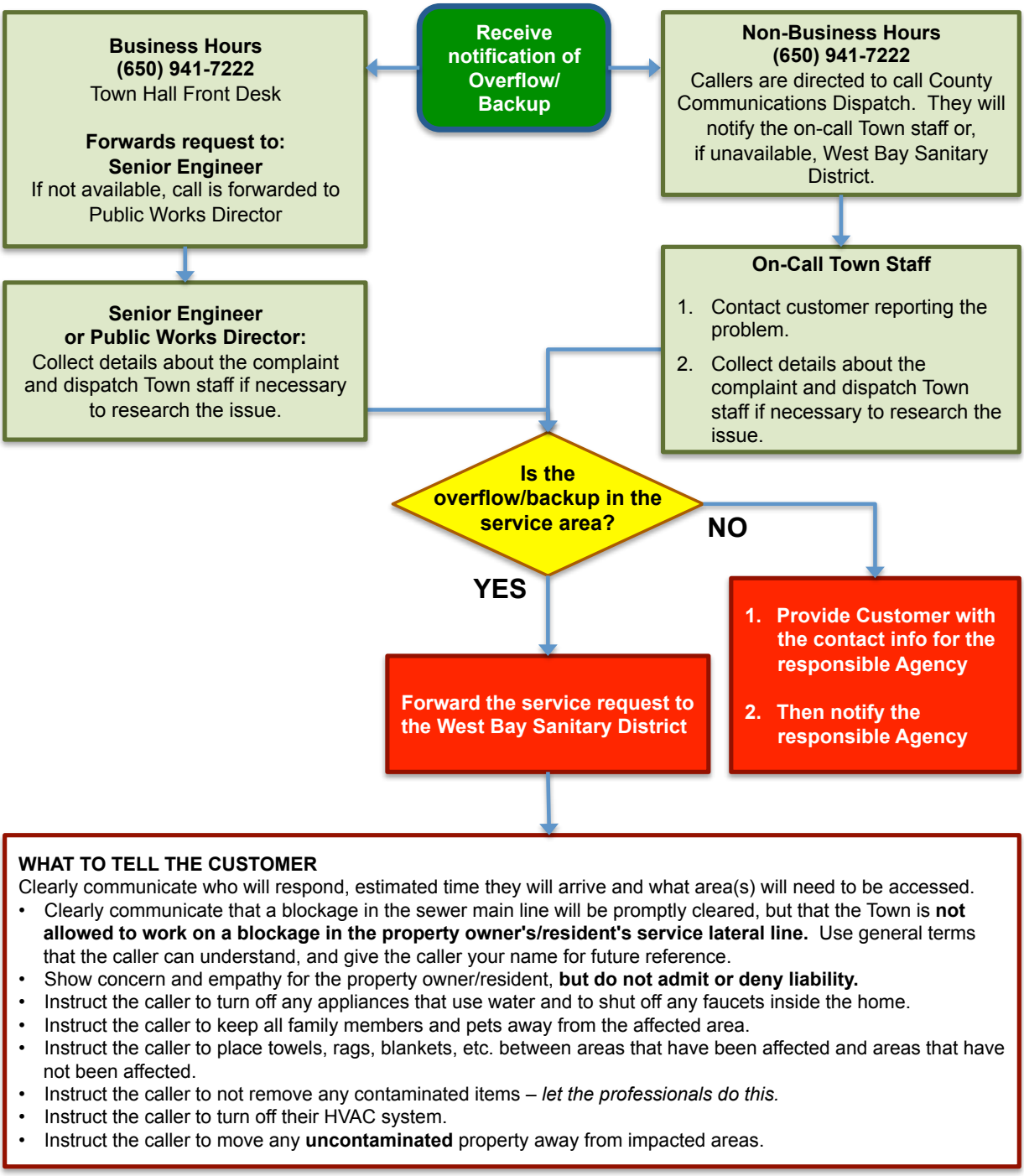

© 2004-2014 DKF Solutions Group, LLC. All rights reserved.

6.2 CITY STAFF/TOWN'S MAINTENANCE CONTRACTOR OBSERVATION

Town staff conducts periodic inspections of its sewer system facilities as part of their routine activities. Any problems noted with the sewer system facilities are reported to appropriate Town staff that, in turn, responds to emergency situations. Work orders are issued to correct non-emergency conditions.

6.3 CONTRACTOR OBSERVATION

The following procedures are to be followed in the event that a contractor/plumber causes or witnesses a Sanitary Sewer Overflow. If the contractor/plumber causes or witnesses an SSO they should:

1. Immediately notify the Town
2. Protect storm drains
3. Protect the public
4. Provide Information to Town and/or West Bay Sanitary District staff such as start time, appearance point, suspected cause, weather conditions, etc.
5. Direct ALL media and public relations requests to the City Clerk

7. SSO Response Procedures

ref. SWRCB Order No. 2006-0003-DWQ Element 6(b)

The Town will respond to SSOs as soon as feasible following notification of an overflow/backup or unauthorized discharge. The Town has contracted the West Bay Sanitary District (WBSD) to perform the response activities described in this section.

7.1 First Responder Priorities

The first responder priorities are:

- To follow safe work practices.
- To respond promptly with the appropriate and necessary equipment.
- To contain the spill wherever feasible, and restore the flow as soon as practicable.
- To minimize public access to and/or contact with the spilled sewage.
- To promptly notify the Town of Los Altos Hills Senior Engineer in event of major SSO.
- To return the spilled sewage to the sewer system.
- To restore the area to its original condition (or as close as possible).

7.2 Safety

WBSD and Town Staff is responsible for following safety procedures at all times. Special safety precautions must be observed when performing sewer work. There may be times when personnel responding to a sewer system event are not familiar with potential safety hazards peculiar to sewer work. In such cases it is appropriate to take the time to discuss safety issues, consider the order of work, and check safety equipment before starting the job.

© 2004-2014 DKF Solutions Group, LLC. All rights reserved.

7.3 Initial Response

The WBSD first responder must respond to the reporting party/problem site and visually check for potential sewer stoppages or overflows.

The first responder will:

- Note arrival time at the site of the overflow/backup.
- Verify the existence of a public sewer system spill or backup.
- Determine if the overflow or blockage is from a public or private sewer.
- Identify and assess the affected area and extent of spill.
- Contact caller if time permits.
- If the spill is large or in a sensitive area, document conditions upon arrival with photographs. Decide whether to proceed with clearing the blockage to restore the flow or to initiate containment measures. The guidance for this decision is:
    - Small spills (i.e., spills that are easily contained) – proceed with clearing the blockage.
    - Moderate or large spill where containment is anticipated to be simple – proceed with the containment measures.
    - Moderate or large spills where containment is anticipated to be difficult – proceed with clearing the blockage; however, whenever deemed necessary, call for additional assistance and implement containment measures.
- Take steps to contain the SSO. For detailed procedures refer to Appendix B: Sanitary Sewer Backup Procedures, and Appendix C: Sanitary Sewer Overflow Packet.

7.4 Initiate Spill Containment Measures

The WBSD first responder will attempt to contain as much of the spilled sewage as possible using the following steps:

- Determine the immediate destination of the overflowing sewage.
- Plug storm drains using air plugs, sandbags, and/or plastic mats to contain the spill, whenever appropriate. If spilled sewage has made contact with the storm drainage system, attempt to contain the spilled sewage by plugging downstream storm drainage facilities.
- Contain/direct the spilled sewage using dike/dam or sandbags.
- Pump around the blockage/pipe failure.
- Determine the best location to start clearing blockage.

7.5 Equipment

This section provides a list of specialized equipment that may be used to support this Overflow Emergency Response Plan.

- *Closed Circuit Television (CCTV) Inspection Unit* – A CCTV Inspection Unit is required to determine the root cause for all SSOs from gravity sewers.
- *Camera* -- A digital or disposable camera is required to record the conditions upon arrival, during clean up, and upon departure.
- *Emergency Response Trucks* -- A utility body pickup truck, or open bed is required to store and transport the equipment needed to effectively respond to sewer emergencies. The equipment and tools will include containment and clean up materials.
- *Portable Generators, Portable Pumps, Piping, and Hoses* – Equipment used to bypass pump, divert, or power equipment to mitigate an SSO.

© 2004-2014 DKF Solutions Group, LLC. All rights reserved.

- *Combination Sewer Cleaning Trucks* -- Combination high velocity sewer cleaning trucks with vacuum tanks are required to clear blockages in gravity sewers, vacuum spilled sewage, and wash down the impacted area following the SSO event.
- *Air plugs, sandbags and plastic mats*
- *Portable Lights*

Standard operating procedures for equipment that may be necessary in the event of a sanitary sewer overflow or backup are maintained by West Bay Sanitary District.

8. Recovery and Cleanup

ref. SWRCB Order No. 2006-0003-DWQ Element 6(e)

West Bay Sanitary District has been contracted by the Town to perform recovery and cleanup activities as described in this section. The recovery and cleanup phase begins immediately after the flow has been restored and the spilled sewage has been contained to the extent possible. The SSO recovery and cleanup procedures are:

8.1 Estimate the Volume of Spilled Sewage

Use the methods outlined in the Sanitary Sewer Backup Packet and/or the Field Guide to estimate the volume of the spilled sewage. Wherever possible, document the estimate using photos and/or video of the SSO site before and during the recovery operation.

8.2 Recovery of Spilled Sewage

Vacuum up and/or pump the spilled sewage and rinse water, and discharge it back into the sanitary sewer system.

8.3 Clean-up and Disinfection

Clean up and disinfection procedures will be implemented to reduce the potential for human health issues and adverse environmental impacts that are associated with an SSO event. The procedures described are for dry weather conditions and will be modified as required for wet weather conditions.

Private Property
WBSD crews will perform cleanup when the property damage is minor in nature and is outside of private building dwellings, such as in front, side and backyards, easements, etc. In all other cases, affected property owners can call a water damage restoration contractor to complete the cleanup and restoration. If the overflow into property is the definite cause of Town system failure, the property owner can call out a water damage restoration contractor to complete the cleanup and restoration. In both cases, property owners may obtain a Town claim form from the Administrative Services Director or the Public Works Director.

Hard Surface Areas
WBSD crews will collect all signs of sewage solids and sewage-related material either by protected hand or with the use of rakes and brooms. They will wash down the affected area with clean water and/or apply enzymes or similar non-toxic biodegradable surface disinfectant until the water runs clear. The flushing volume will be approximately three times the estimated volume of the spill. Reasonable steps will be taken to contain and vacuum up the wastewater.

© 2004-2014 DKF Solutions Group, LLC. All rights reserved.

The area will be allowed to dry and the process will be repeated if additional cleaning is required.

Landscaped and Unimproved Natural Vegetation
WBSD crews will collect all signs of sewage solids and sewage-related material either by protected hand or with the use of rakes and brooms. They will clean and disinfect the affected area. The flushing volume will be approximately three times the estimated volume of the spill. They will either contain or vacuum up the wash water so that none is released. The area will be allowed to dry and the process will be repeated if additional cleaning is required.

Natural Waterways
The Department of Fish and Wildlife will be notified by CalOES for SSOs greater than or equal to 1,000 gallons.

Wet Weather Modifications
Flushing and sampling will be performed when it is safe to do so during heavy storm events (i.e., sheet of rainwater across paved surfaces).

8.4 Public Notification

Signs will be posted and barricades put in place as necessary to keep vehicles and pedestrians away from contact with spilled sewage. Work with County Environmental Health as needed regarding placement and language of public warnings will be followed. Additionally, the Town of Los Altos Hills Public Works Director will use their best judgment regarding supplemental sign placement in order to protect the public and local environment. Signs will not be removed until directed by County Environmental Health, the Public Works Director, or designee.

Creeks, streams and beaches that have been contaminated as a result of an SSO will be posted at visible access locations until the risk of contamination has subsided to acceptable background bacteria levels. The area and warning signs, once posted, will be checked every day to ensure that they are still in place. Photographs of sign placement will be taken.

In the event that an overflow occurs at night, the location will be inspected first thing the following day. The field crew will look for any signs of sewage solids and sewage-related material that may warrant additional cleanup activities.

When contact with the local media is deemed necessary, the City Clerk or their designee will provide the media with all revelvant information.

9. Water Quality

ref. SWRCB Order No. 2006-0003-DWQ Element 6(f)

9.1 Waters of the State

The following six major creeks run through the Town of Los Altos Hills's service area:

- Matadero
- Dear
- Barron
- Adobe
- Hale
- West Branch of Permanente

© 2004-2014 DKF Solutions Group, LLC. All rights reserved.

In the event that these waters are impacted by a sanitary sewer overflow, the West Bay Sanitary District will be contacted.

9.2 Water Quality Sampling and Testing

Water quality sampling and testing is required for Category 1 SSOs of 50,000 gallons or greater to determine the extent and impact of the SSO. The water quality sampling procedures must be implemented by West Bay Sanitary District staff within 48 hours of becoming aware of the SSO and include the following:

- WBSD staff will collect samples as soon as possible after the discovery and mitigation of the SSO event.
- WBSD is responsible for sampling, ensuring the samples are analyzed at their lab, and providing the Town with the sample results.

9.3 Water Quality Monitoring Plan

The Town Water Quality Monitoring Plan will be implemented immediately upon discovery of any Category 1 SSO of 50,000 gallons or more in order to assess impacts from SSOs to surface waters. The SSO Water Quality Monitoring Program will:

1. Contain protocols for water quality monitoring.
2. Account for spill travel time in the surface water and scenarios where monitoring may not be possible (e.g. safety, access restrictions, etc.)
3. Require water quality analyses for ammonia and bacterial indicators to be performed by an accredited or certified laboratory.
4. Require monitoring instruments and devices used to implement the SSO Water Quality Monitoring Program to be properly maintained and calibrated, including any records to document maintenance and calibration, as necessary, to ensure their continued accuracy.
5. Within 48 hours of the Town becoming aware of the SSO, require water quality sampling for ammonia and bacteria indicators (e.g., total and fecal coliform, enterococcus)
6. Observe proper chain of custody procedures.

9.4 SSO Technical Report

The Town will submit an SSO Technical Report to the CIWQS Online SSO Database within 45 calendar days of the SSO end date for any SSO in which 50,000 gallons or greater reaches surface waters. The Public Works Director will supervise the preparation of this report and will certify this report. This report, which does not preclude the Water Boards from requiring more detailed analyses if requested, shall include at a minimum, the following:

<u>Causes and Circumstances of the SSO:</u>

- Complete and detailed explanation of how and when the SSO was discovered.
- Diagram showing the SSO failure point, appearance point(s), and final destination(s).
- Detailed description of the methodology employed and available data used to calculate the volume of the SSO and, if applicable, the SSO volume recovered.
- Detailed description of the cause(s) of the SSO.
- Copies of original field crew records used to document the SSO.
- Historical maintenance records for the failure location.

© 2004-2014 DKF Solutions Group, LLC. All rights reserved.

Town's Response to SSO:

- Chronological narrative description of all actions taken to terminate the spill.
- Explanation of how the SSMP Overflow Emergency Response Plan was implemented to respond to and mitigate the SSO.
- Final corrective action(s) completed and/or planned to be completed, including a schedule for actions not yet completed.

Water Quality Monitoring:

- Description of all water quality sampling activities conducted including analytical results and evaluation of the results.
- Detailed location map illustrating all water quality sampling points.

10. Sewer Backup Into/Onto Private Property Claims Handling Policy

It is the policy of the Town that a claim form shall be offered to anyone wishing to file a claim. The following procedures will be observed for all sewer overflows/backups into/onto private property:

- Town staff will offer a Town claim form irrespective of fault whenever it is possible that the sanitary sewer backup may have resulted from an apparent blockage in the Town-owned sewer lines or whenever a Town customer requests a claim form. The claim may later be rejected if subsequent investigations into the cause of the loss indicate the Town was not at fault.

- It is the responsibility of the Town and/or WBSD staff to gather information regarding the incident and notify the Town Senior Engineer or his/her designee.

- It is the responsibility of the Town Administrative Services Director or his/her designee to review all claims and to oversee the adjustment and administration of the claim to closure.

11. Notification, Reporting, Monitoring and Recordkeeping Requirements

ref. SWRCB Order No. 2006-0003-DWQ Element 6(c)

In accordance with the Statewide General Waste Discharge Requirements for Sanitary Sewer Systems (SSS GWDRs), the Town of Los Altos Hills maintains records for each sanitary sewer overflow for a minimum of five (5) years. Records include:

- Documentation of response steps and/or remedial actions
- Photographic evidence to document the extent of the SSO, field crew response operations, and site conditions after field crew SSO response operations have been completed. The date, time, location, and direction of photographs taken will be documented.
- Documentation of how any estimations of the volume of discharged and/or recovered volumes were calculated including all assumptions made.

Regulator required notifications are outlined in Section 11.1 on the following page.

© 2004-2014 DKF Solutions Group, LLC. All rights reserved.

11.1 Regulator Required Notifications

ELEMENT	REQUIREMENT	METHOD
NOTIFICATION	Within two hours of becoming aware of any Category 1 SSO greater than or equal to 1,000 gallons discharged to surface water or spilled in a location where it probably will be discharged to surface water, the Town will notify the California Office of Emergency Services (CalOES) and obtain a notification control number.	Call Cal OES at: **(800) 852-7550**
REPORTING	• Category 1 SSO: The Town will submit draft report within three business days of becoming aware of the SSO and certify within 15 calendar days of SSO end date. • Category 2 SSO: The Town will submit draft report within 3 business days of becoming aware of the SSO and certify within 15 calendar days of the SSO end date. • Category 3 SSO: The Town will submit certified report within 30 calendar days of the end of month in which SSO the occurred. • SSO Technical Report: The Town will submit within 45 calendar days after the end date of any Category 1 SSO in which 50,000 gallons or greater are spilled to surface waters. • "No Spill" Certification: The Town will certify that no SSOs occurred within 30 calendar days of the end of the month or, if reporting quarterly, the quarter in which no SSOs occurred. • Collection System Questionnaire: The Town will update and certify every 12 months	Enter data into the CIWQS Online SSO Database[1] (http://ciwqs.waterboards.ca.gov/) certified by the Legally Responsible Official(s)[2]. All information required by CIWQS will be captured in the Sanitary Sewer Overflow Report. Certified SSO reports may be updated by amending the report or adding an attachment to the SSO report within 120 calendar days after the SSO end date. After 120 days, the State SSO Program Manager must be contacted to request to amend an SSO report along with a justification for why the additional information was not available prior to the end of the 120 days.
WATER QUALITY MONITORING	The Town will conduct water quality sampling within 48 hours after initial SSO notification for Category 1 SSOs in which 50,000 gallons or greater are spilled to surface waters.	Water quality results will be uploaded into CIWQS for Category 1 SSOs in which 50,000 gallons or greater are spilled to surface waters.
RECORD KEEPING	The Town will maintain the following records for five (5) years: • SSO event records. • Records documenting Sanitary Sewer Management Plan (SSMP) implementation and changes/updates to the SSMP. • Records to document Water Quality Monitoring for SSOs of 50,000 gallons or greater spilled to surface waters. • Collection system telemetry records if relied upon to document and/or estimate SSO Volume.	Self-maintained records shall be available during inspections or upon request.

[1] In the event that the CIWQS online SSO database is not available, the Senior Engineer will notify SWRCB by phone and will fax or e-mail all required information to the RWQCB office at (510) 622-2460 in accordance with the time schedules identified above. In such an event, the Town will submit the appropriate reports using the CIWQS online SSO database when the database becomes available. A copy of all documents that certify the submittal in fulfillment of this section shall be retained in the SSO file.

[2] The Town always has at least one LRO. Any change in the LRO(s) including deactivation or a change to contact information, will be submitted to the SWRCB within 30 days of the change by calling (866) 792-4977 or emailing help@ciwqs.waterboards.ca.gov.

© 2004-2014 DKF Solutions Group, LLC. All rights reserved.

For reporting purposes, if one SSO event of whatever category results in multiple appearance points in a sewer system, a single SSO report is required in CIWQS that includes the GPS coordinates for the location of the SSO appearance point closest to the failure point, blockage or location of the flow condition that cause the SSO, and descriptions of the locations of all other discharge points associated with the single SSO event.

11.2 Complaint Records

The Town maintains records of all complaints received whether or not they result in sanitary sewer overflows for five (5) years. These complaint records include:

- Date, time, and method of notification
- Date and time the complainant or informant first noticed the SSO or occurrence related to the call
- Narrative description describing the complaint
- A statement from the complainant or informant, if they know, of whether or not the potential SSO may have reached waters of the state
- Name, address, and contact telephone number of the complainant or informant reporting the potential SSO (if not reported anonymously)
- Follow-up return contact information for each complaint received (if not reported anonymously)
- Final resolution of the complaint with the original complainant

12. Post SSO Event Debriefing

ref. SWRCB Order No. 2006-0003-DWQ Element 6(d)

Every SSO event is an opportunity to evaluate the Town response and reporting procedures. Each overflow event is unique, with its own elements and challenges including volume, cause, location, terrain, climate, and other parameters.

As soon as possible after Category 1 and Category 2 SSO events all appropriate participants will meet to review the procedures used and to discuss what worked and where improvements could be made in preventing or responding to and mitigating future SSO events. The results of the debriefing will be documented and tracked to ensure the action items are completed as scheduled.

13. Failure Analysis Investigation/Post Spill Assessment

ref. SWRCB Order No. 2006-0003-DWQ Element 6(d)

The objective of the failure analysis investigation is to determine the “root cause” of the SSO and to identify corrective action(s) needed that will reduce or eliminate future potential for the SSO to recur or for other SSOs to occur.

The investigation will include reviewing all relevant data to determine appropriate corrective action(s) for the line segment. The investigation will include, as appropriate:

- Reviewing and completing the Sanitary Sewer Overflow Report and any other documents related to the incident
- Reviewing the incident timeline and other documentation regarding the incident
- Reviewing communications with the reporting party and witness

© 2004-2014 DKF Solutions Group, LLC. All rights reserved.

- Reviewing volume estimate, volume recovered estimate, volume estimation assumptions and associated drawings
- Reviewing available photographs
- Interviewing staff that responded to the spill
- Reviewing past maintenance records
- Reviewing past CCTV records
- Conducting a CCTV inspection to determine the condition of all line segments immediately following the SSO and reviewing the video and logs
- Reviewing any Fats, Oils, Roots and Grease (FROG) related information or results
- Post SSO debrief records
- Interviews with the public at the SSO location

The product of the failure analysis investigation will be the determination of the root cause and the identification and scheduling of the corrective actions.

14. SSO Response Training

ref. SWRCB Order No. 2006-0003-DWQ Element 6(d)

This section provides information on the training that is required to support this Overflow Emergency Response Plan.

14.1 Initial and Annual Refresher Training

All personnel who may have a role in responding to, reporting, and/or mitigating a sewer system overflow will receive training on the contents of this OERP. All new employees will receive training before they are placed in a position where they may have to respond. Current employees will receive annual refresher training on this plan and the procedures to be followed. The Town and/or WBSD as applicable will document all training.

Affected employees will receive annual training on the following topics by knowledgeable trainers:

- The Town's Overflow Emergency Response Plan and Sanitary Sewer Management Plan
- Sanitary Sewer Overflow Volume Estimation Techniques
- Researching and documenting Sanitary Sewer Overflow Start Times
- Impacted Surface Waters: Response Procedures
- State Water Resources Control Board Employee Knowledge Expectations
- Employee Core Competency Evaluations on Sanitary Sewer Operations
- Water Quality Sampling Plan

The Town and/or WBSD as applicable will verify that annual safety training requirements are current for each employee, and that employees are competent in the performance of all core competencies. This will be verified through electronic testing, interviews and/or observations. The Town/WBSD will address, through additional training/instruction, any identified gaps in required core competencies.

14.2 SSO Response Drills

Periodic training drills or field exercises will be held to ensure that employees are up to date on these procedures, equipment is in working order, and the required materials are readily available. The training drills will cover scenarios typically observed during sewer related emergencies (e.g. mainline blockage, mainline failure, and lateral blockage). The results and the observations during the drills will be recorded and action items will be tracked to ensure completion.

© 2004-2014 DKF Solutions Group, LLC. All rights reserved.

14.3 SSO Training Record Keeping

Records will be kept by the respective agency of all training that is provided in support of this plan. The records for all scheduled training courses and for each overflow emergency response training event and will include date, time, place, content, name of trainer(s), and names and titles of attendees.

14.4 Contractors Working On Town Sewer Facilities

All construction contractors working on Town sewer facilities will be provided with instruction on the measures to take in the event that they cause or observe an SSO via Town contracts specifications (see Appendix B). Emergency response procedures shall be discussed at project pre-construction meeting and after any contractor involved incidents.

15. High Priority Assets

The following assets need to be monitored and inspected prior to, during, and following an extreme weather event or natural disaster:

Critical Asset	Location	Monitor and Inspection Description
Purissima Pump Station	@ Southwest corner of Purissima Road and Elena Road	Monthly inspection performed by WBSD
O'Keefe Lane Pump Station	On O'Keefe Lane West of El Monte Avenue	Monthly inspection performed by WBSD

16. Authority

- Health & Safety Code Sections 5410-5416
- CA Water Code Section 13271
- Fish & Wildlife Code Sections 5650-5656
- State Water Resources Control Board Order No. 2006-0003-DWQ
- State Water Resources Control Board Order 2013-009-DWQ effective September 9, 2013

17. References

- Sanitary Sewer Overflow and Backup Response Field Guide, 2013, DKF Solutions Group, LLC
- Appendix A: Regulatory Notifications Packet

© 2004-2014 DKF Solutions Group, LLC. All rights reserved.

Appendix A

REGULATORY NOTIFICATIONS PACKET

© 2004-2014 DKF Solutions Group, LLC. All rights reserved.

Instructions:

1. Receive call from on-site sewer crew reporting a Sanitary Sewer Overflow.
2. Open this packet.
3. Refer to the Regulatory Reporting Guide (A-1) for instructions.
4. Use the SSO Reporting Checklist for the appropriate category of spill (A-2a or A-2b) to document that all notifications are made according to the reporting schedule.

Contents:

Form	Page Number
Regulatory Reporting Guide	A-1
Reporting Checklist: Category 1	-2a
Reporting Checklist: Categories 2 and 3	-2b
RWQCB Notification Fax	-3

Print on 6”x9” envelope

© 2004-2014 DKF Solutions Group. All rights reserved.

Regulatory Notifications Packet

Regulatory Reporting Guide

Reporting Instructions

Deadline	See reverse side for contact information and definitions of the categories of spills of untreated or partially treated wastewater from publically owned sanitary sewer system			Spill from Private Lateral
	Category 1	Category 2	Category 3	
2 hours after awareness of SSO	If SSO is greater than or equal to 1,000 gallons, call CalOES at (800) 852-7550.	-	-	-
As soon as possible	If SSO impacts private property that may be due to a failure in the Town sewer and/or if the Town believes a claim for damages may be submitted against the Town contact ABAG Plan Corporation and the Town Administrative Services Director. See Side B for contact information.			-
48 hours after awareness of SSO	If 50,000 gal or more were not recovered, begin water quality sampling and initiate impact assessment	-	-	-
3 business Days after awareness of SSO	Submit Draft Spill Report in the CIWQS* database	Submit Draft Spill Report in the CIWQS* database	-	-
15 calendar Days after response conclusion	Certify Spill Report in CIWQS*. Update as needed until 120 days after SSO end time	Certify Spill Report in the CIWQS* database. Update as needed until 120 days after SSO end time	-	-
30 calendar Days after end of calendar month in which SSO occurred	-	-	Certify Spill Report in the CIWQS* database. Update as needed until 120 days after SSO end time	-
45 calendar days after SSO end time	If 50,000 gal or more were not recovered, submit SSO Technical Report using CIWQS*	-	-	-

* In the event that the CIWQS online SSO database is not available, do the following until the CIWQS online SSO database becomes available: (See contact information on Side B)

1. Make required notifications to the San Francisco Regional Water Quality Control Board (SFRWQCB office) using A-3, and
2. Notify the State Water Resources Control Board (SWRCB) by phone or email

Note: For reporting purposes, if one SSO event results in multiple appearance points, complete one SSO report in the CIWQS SSO Online Database, and report the location of the SSO failure point, blockage or location of the flow condition that caused the SSO, in the CIWQS SSO Online Database, including all the discharge points associated with the SSO event.

© 2004-2014 DKF Solutions Group, LLC. All rights reserved.

Contact Information

Contact	Telephone/Fax/Email
CalOES	(800) 852-7550
ABAG Plan Corporation/York Risk Services Group	
Tiffany Roduit, Claims Specialist	Telephone: (925) 349-3878 Cell: (925) 808-5072
If you do not receive a call back from Tiffany Roduit within 30 minutes, call: Alex Davis, Claims Supervisor	Telephone: (925) 349-3890 Cell: (925) 349-3890
Administrative Services Director	(650) 941-7222
San Francisco Regional Water Quality Control Board (SFRWQCB):	Telephone: (510) 622-2369 Fax: (510) 622-2460
State Water Resources Control Board (SWRCB):	
Russell Norman, P.E.	(916) 323-5598 Russell.Norman@waterboards.ca.gov
Victor Lopez, Water Resources Control Engineer	(916) 323-5511 Victor.Lopez@waterboards.ca.gov

Authorized Personnel

The following are authorized to perform regulatory reporting:

Title	Telephone	✔ If LRO*
Senior Engineer	(650) 941-7222	✔
Director of Public Works	(650) 941-7222	✔
West Bay Sanitary District Staff	(650) 321-0384	

**Legally Responsible Official (LRO) is authorized to electronically sign and certify SSO reports in CIWQS.*

Definitions of Spill Categories

The response crew will complete the SSO Report form in the SSO Packet to document how category was determined.

Category	Definition
Category 1:	Discharge of untreated or partially treated wastewater of any volume resulting from a sanitary sewer system failure or flow condition that either: • Reaches surface water and/or drainage channel tributary to a surface water; or • Reached a Municipal Separate Storm Sewer System (MS4) and was not fully captured and returned to the sanitary sewer system or otherwise captured and disposed of properly.
Category 2:	Discharge of untreated or partially treated wastewater greater than or equal to 1,000 gallons resulting from a sanitary sewer system failure or flow condition that either: • Does not reach surface water, a drainage channel, or an MS4, or • The entire SSO discharged to the storm drain system was fully recovered and disposed of properly.
Category 3:	All other discharges of untreated or partially treated wastewater resulting from a sanitary sewer system failure or flow condition

© 2004-2014 DKF Solutions Group, LLC. All rights reserved.

Regulatory Notifications Packet

Category 1 SSO Reporting Checklist

A-2a

Use this Checklist for Category 1 SSOs only

STEP 1: Receive call from crew.

STEP 2: 2-hour Notification

☐ If SSO is greater than or equal to 1,000 gallons, notify CalOES within 2 hours of the time the agency was notified of the spill (800) 852-7550:

- Date Called: _____
- Time called: _____:_____ ☐AM ☐PM
- CalOES Control number: _____
- CalOES Operator Name: _____

STEP 3: As soon as possible

If SSO impacts private property that may be due to a failure in the Town sewer and/or if the Town believes a claim for damages may be submitted against the Town, notify the following:

☐ Contact ABAG Plan Corporation

☐ Contact the Town Administrative Services Director

STEP 4: Within 48-Hours after awareness of SSO

☐ Only if 50,000 gallons or more was not recovered, implement Water Quality Monitoring Plan.

STEP 5: Within 3 business days after awareness of SSO

☐ Submit a Draft Spill Report using the CIWQS online reporting database.

STEP 6: Within 15 calendar days after response conclusion

☐ Certify the Spill Report using the CIWQS online reporting database. Updates to the Spill Report may be made for up to 120 days following the conclusion of the SSO Response.

STEP 7: Within 45 calendar days after SSO end time

☐ Within 45 days after the SSO end time, submit an SSO Technical Report using the CIWQS online reporting database only if 50,000 gallons or more was spilled to surface waters.

This form completed by: _____ _____ _____

Name *Title* *Date*

© 2004-2014 DKF Solutions Group, LLC. All rights reserved.

Regulatory Notifications Packet

Category 2 & 3 SSO Reporting Checklist

A-2b

Use this Checklist for Category 2 and 3 SSOs only

STEP 1: Receive call from crew.

STEP 2: As soon as possible

If SSO impacts private property that may be due to a failure in the Town sewer and/or if the Town believes a claim for damages may be submitted against the Town, notify the following:
(Please note: Notification depends on the property that was affected by the SSO, home basement, business, park, etc.)

- ☐ Contact ABAG Plan Corporation
- ☐ Contact the Town Administrative Services Director

STEP 3: Submit Draft Spill Report (Category 2 only)

- ☐ Submit a Draft Spill Report using the CIWQS online reporting database within 3 business days after awareness of Category 2 SSO.

STEP 4: Certify Spill Report

- ☐ Certify the Spill Report using the CIWQS online reporting database:
  - Category 2 SSO: Within 15 calendar days after the conclusion of the response
  - Category 3 SSO: Within 30 calendar days after the end of the calendar month in which the SSO occurred

- ☐ Updates to the Spill Report may be made for up to 120 days following the conclusion of the SSO Response.

This form completed by: _____ _____ _____

Name *Title* *Date*

© 2004-2014 DKF Solutions Group, LLC. All rights reserved.

Regulatory Notifications Packet

Regional Water Quality Control Board Notification Fax

A-3

NOTE TO Town of Los Altos Hills Staff:
Only use this form in the event that the CIWQS online SSO database is not available

FAX TO: San Francisco Regional Water Quality Control Board
Fax Number: (510) 622-2460
Telephone: (510) 622-2369

Date: _____

Pages: _____

FROM: Town of Los Altos Hills
Telephone: (650) 941-7222
Fax: (650) 941-3160

Address of SSO: _____ City: _____

County: _____ Date/Time: _____

SSO Start Time: _____ SSO Stop Time: _____

Volume of SSO: _____ Volume Recovered: _____

Final Disposition: _____

_____

Affected Water Body: _____

Samples Collected? ☐YES ☐NO

Taken to: _____

Crew Members: _____

Agencies Notified	Number(s)		Contact	Time	Date
CalOES	(800) 852-7550	☐YES ☐NO	_____	_____	_____
CIQWS		☐YES ☐NO	_____	_____	_____

OTHER: _____

_____

© 2004-2014 DKF Solutions Group, LLC. All rights reserved.

Appendix B

Construction Contract Appendix A - “Sanitary Overflows”

© 2004-2014 DKF Solutions Group, LLC. All rights reserved.

APPENDIX A - SANITARY OVERFLOWS

What?	A sanitary sewer over flow (SSO) is a discharge of untreated human and industrial waste before it reaches the wastewater treatment facility.
Where?	SSOs usually occur through manholes, plumbing fixtures, and service contract.
Why?	SSOs are usually caused by grease, debris, root balls, or personal hygiene products blocking the sewer lines, or by unusual high flow volume.

The following procedures are to be followed in the event that you cause or witness a SSO.

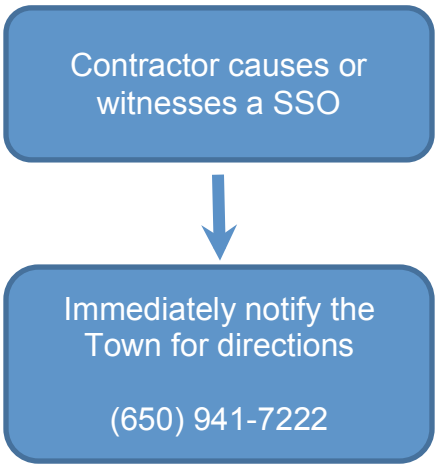

All media and public relations requests should be directed to City Clerk at (650) 741-7222.

© 2004-2014 DKF Solutions Group, LLC. All rights reserved.

In the event of a **Sewer Backup** into a home/business
READ THIS FIRST

- ❑ If this is a Category 1 SSO greater than or equal to 1,000 gallons, IMMEDIATELY contact the Senior Engineer or their designee at (650) 941-7222 to make the 2-hour notification to CalOES.

- ❑ If the backup is into/onto private property AND possibly due to a problem in the public sewer, notify Tiffany Roduit, Claims Specialist at York Risk Services Group/ABAG Plan Claims Team at (925) 349-3878 telephone or (925) 808-5072 cell. If she cannot be reached within 30 minutes, call Alex Davis, Claims Supervisor (925) 349-3890 telephone or (925) 349-3890 cell.

- ❑ Contact the City Clerk at (650) 941-7222 for any media requests.

Don't forget photos!

WBSD Staff and/or Town Staff:

- ❑ Follow the instructions on the Sewer Backup Response Flowchart (B-1). Note: If multiple dwelling units are affected, use one packet per unit and check here: ☐
- ❑ If indicated on the flowchart, give the customer the Bubbled Toilets Letter and/or the Customer Service Packet and have them initial here:
  Customer acknowledgement of receipt of Bubbled Toilets Letter: _____
  Customer acknowledgement of receipt of Customer Service Packet: ____
- ❑ Place completed forms in this envelope, complete the Chain of Custody record (right) and forward this packet to the Town of Los Altos Hills Senior Engineer.

Print Name: _____

Initial: _____

Date: _____

Time: _____

Town of Los Altos Hills Senior Engineer:

Follow the instructions on the bottom of the Sewer Backup Response Flowchart (B-1).

- ❑ Complete the Regulatory Notifications Packet.
- ❑ Complete the Claims Submittal Checklist.
- ❑ Complete the Chain of Custody record (right) and forward this packet to the Administrative Services Director.
- ❑ Coordinate with West Bay Sanitary District to complete a failure analysis.

Print Name: _____

Initial: _____

Date: _____

Time: _____

Administrative Services Director:

- ❑ Refer to the Claims Submittal Checklist.

© 2004-2014 DKF Solutions Group All rights reserved.

Sanitary Sewer Backup Response Packet
Backup Response Flowchart

B-1
Side A

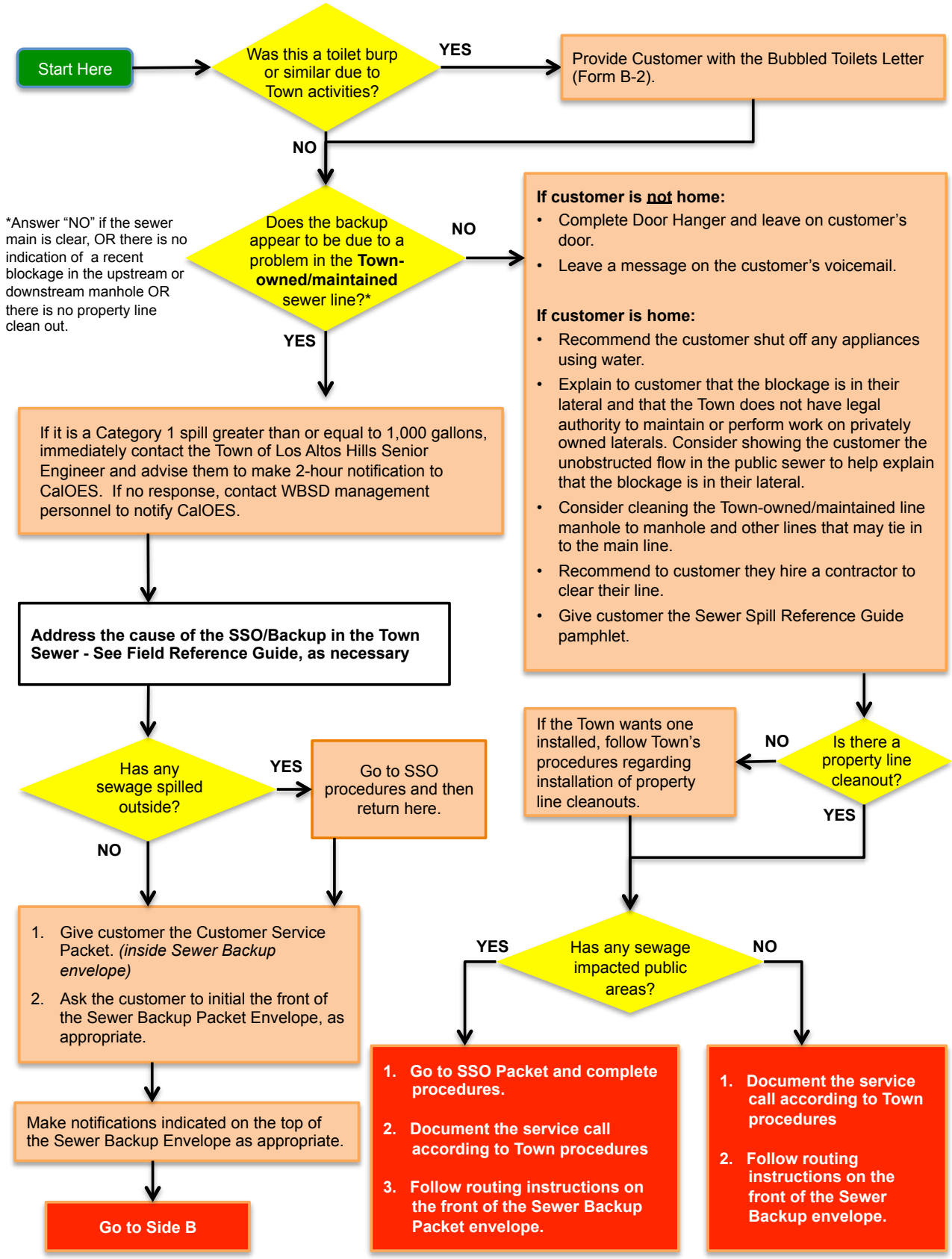

© 2004-2014 DKF Solutions Group All rights reserved.

Sanitary Sewer Backup Response Packet
Backup Response Flowchart

B-1
Side B

Continue Here From Side A

1. Remove the First Responder Form (B-3) from the Sewer Backup Packet envelope and complete.
2. WBSD staff - ask the customer for permission to enter the building and take photographs of affected and non-affected areas. If allowed by customer, try to get pictures showing where the damaged areas stopped. If access is denied, contact the Town's Senior Engineer or the Public Works Director.
3. Immediately contact Tiffany Roduit, Claims Specialist at York Risk Services Group/ABAG Plan Claims Team and provide the information from the completed First Responder Form: (925) 349-3878 telephone or (925) 808-5072 cell. If you do not receive a call back from Tiffany Roduit within 30 minutes, call Alex Davis, Claims Supervisor (925) 349-3890 telephone or (925) 349-3890 cell.

Complete the Start Time Determination Form (B-4). Remember, the spill was probably already occurring before it was reported.

WBSD will complete their Call-Out Report and Initial Spill Calculation Worksheet.

Clean/disinfect any overflow **outside** of the building. NOTE: Do not allow any disinfectants to escape to storm drains.

Can you locate a backwater prevention device (BPD) or cleanout on the affected building?

YES → Ask for permission to photograph the backwater prevention device or cleanout and photograph, if allowed.

NO →

Do you want the lateral televised? (if applicable)

YES → Schedule televising of the lateral as soon as possible.

NO →

1. **Document the service call according to Town procedures.**
2. **Complete the remaining instructions on the front of the Sewer Backup Packet.**
3. **Follow routing instructions as indicated on the front of the Sewer Backup Packet.**

© 2004-2014 DKF Solutions Group All rights reserved.

Sanitary Sewer Backup Response Packet

Bubbled Toilets Letter

Dear Town of Los Altos Hills Customer,

Thank you for informing us that your toilet bubbled while our crews were working in proximity of your property. We apologize for the inconvenience and hope that this letter will answer some of your questions about bubbling toilets.

1. **Is this a health risk?**
   The water that came out of your toilet is potable water from the toilet bowl. Unless your toilet was in use when this occurred, this water is no different than that encountered while cleaning your toilet.

2. **What is the Town doing in the street?**
   In order to insure reliable sewer service, the Town inspects, cleans, and repairs its sewer system on a continuous basis.

3. **How does sewer cleaning cause my toilet to bubble?**
   Typical industry cleaning equipment uses high-pressure water to clean sewers. The first step is to use the high-pressure water jets to propel the hose and cleaning nozzle upstream as far as 800 feet. During this process, air within the main pipe is displaced and sometimes goes up the private lateral pipe and releases though the toilet. This can also happen during the cleaning phase, when high-pressure water is pulled downstream to the cleaning truck.

4. **What causes the air to come from my toilet?**
   Over the years, Town crews have found that the bubbling of toilets have many causes, some of which are:
   - Obstructed vent pipes;
   - Vent pipes that are positioned too far from the toilet;
   - Lateral pipes that may be in use as the crew is cleaning (e.g. draining washing machine, draining bathtub, etc.);
   - Lateral pipes that may have obstructions that are causing them to hold water (e.g. roots, grease, etc.).

5. **What does Town staff do, once informed of a bubbling toilet?**
   Once notified of a bubbling toilet, the crew leader explains to the customer what has happened, and checks to see if there is a clean-out in the customer's yard that could be opened in the future during cleaning. The crew leader then makes notes and completes paperwork that puts the address on the Town's notification list. In the future, crews will notice that this address was "bubbled" at one time, and, before commencing the cleaning, they will notify the occupant of the possibility of bubbling toilets. In the event the occupant is not present when the cleaning begins, the crews will attempt to open clean-outs and/or lower water pressure to avoid bubbling.

6. **What can I do to prevent my toilet from bubbling?**
   When a sewer begins to drain slowly, it may be a sign that it needs to be cleaned or repaired. Trees and shrubs may have root structures that are entering the lateral pipe. The homeowner needs to make sure to have a clean-out for accessing the line. It is the homeowner's responsibility to keep the sewer lateral pipe in good working condition.

It is always a good idea to keep the toilet lid down when not in use, and not install carpets in the bathroom unless they can be easily removed and cleaned. For more information please call the Director of Public Works at (650) 941-7222.

Sincerely,

Town of Los Altos Hills

© 2004-2014 DKF Solutions Group All rights reserved.

Sanitary Sewer Backup Response Packet

Carta de Inodoros Burbujeados

B-2
Spanish

Estimado Cliente de la Ciudad de Los Altos Hills:

Gracias por habernos informado que su lavabo burbujeó mientras que nuestros empleados estaban trabajando en proximidad a su propiedad. Le pedimos perdón por la inconveniencia y esperamos que esta carta le contestará algunas de sus preguntas acerca de inodoros burbujeantes.

1. **¿Es riesgo de salud esto?**
   El agua que salió de su inodoro es agua potable de la taza del inodoro. Menos que su inodoro estaba en uso cuando esto ocurrió, esa agua no es diferente de aquella encontrada mientras que limpia su inodoro.
2. **¿Qué está haciendo la Ciudad en la calle?**
   Para asegurar servicio de alcantarilla confiable, la Ciudad inspecciona, limpia, and repara su Sistema de alcantarillado en una forma continua.
3. **¿Cómo causa la limpieza de la alcantarilla que burbujee mi inodoro?**
   El equipamiento industrial de limpieza típico usa agua de alta presión para limpiar alcantarillas. La primer medida es de usar chorros de agua de alta presión para propulsar a la manguera y a la boquilla de limpieza contracorriente tan lejos como ochocientos (800) pies. Durante este proceso, el aire dentro la tubería principal es desplazada y a veces camina para arriba de la tubería lateral privada y se libera por el inodoro. Esto también puede ocurrir durante la fase de limpieza, cuando agua de alta presión es jalada corriente abajo al camión de limpieza.
4. **¿Qué causa al aire que venga de mi inodoro?**
   A lo largo de los años, los empleados de la Ciudad han encontrado que el burbujeo de inodoros tiene muchas causas, algunas de cuales son:
   - Tubería de ventilación obstruida;
   - Tubería de ventilación que está posicionada muy lejos del inodoro;
   - Tubería lateral que pueda estar en uso mientras que los empleados estén limpiando (por ej., vaciando la máquina de lavar, vaciando el baño, etcétera);
   - Tubería lateral que podrá tener obstrucciones que están causándola a contener agua (por ej., raíces, grasa, etcétera).
5. **¿Qué hace el personal de la Ciudad, una vez informados de un inodoro burbujeante?**
   Una vez notificado de un inodoro burbujeante, el líder de nuestros empleados le explica al cliente lo que ha ocurrido, y hace un chequeo para ver si hay una limpieza general en el patio del cliente que se pudiera abrir en el futuro durante la limpieza. El líder de personal luego toma apuntes y completa papeleo que pone a la dirección en la lista de notificación de la Ciudad. En el futuro, los empleados tomarán nota que hubo un tiempo en que esta dirección fue «burbujeada», y, antes de empezar la limpieza, ellos le avisarán al ocupante de la posibilidad de inodoros burbujeantes. En el evento que el ocupante no esté presente cuando la limpieza empiece, los empleados tratarán de abrir las limpiezas generales y/o rebajar la presión del agua para impedir la ocurrencia de burbujeo.
6. **¿Qué puede hacer para impedir a mi inodoro de burbujeando?**
   Cuando una alcantarilla empieza a desaguar lentamente, puede que sea un indicio que se necesita limpiar o reparar. Puede que los árboles y arbustos tengan estructuras de raíces que estén entrando a la tubería lateral. El dueño/la dueña de casa necesita asegurar de tener una limpieza general para acceder la línea. Es la responsabilidad del dueño/la dueña de mantener la tubería de alcantarilla lateral en buena condición operativa.

Siempre es buena idea de mantener la tapa del inodoro bajada cuando no esté el inodoro en uso, y no instalar alfombra en el cuarto de baño menos que esa se pueda quitar y limpiar. Para más información, por favor llame al Director de Obras Públicas al (650) 941-7222.

Atentamente,
La Ciudad de Los Altos Hills

© 2004-2014 DKF Solutions Group All rights reserved.

Sanitary Sewer Backup Response Packet

First Responder Form

B-3
Side A

Fill out this form as completely as possible.
Ask customer if you may enter the home. If so, take photos of all damaged and undamaged areas.

PERSON COMPLETING THIS FORM: Name: _____ Title: _____	PHONE: DATE: TIME:
TIME STAFF ARRIVED ON-SITE:	
DID CUSTOMER CALL CLEANING CONTRACTOR? ☐ Yes ☐ No If YES, name of contractor:	
RESIDENT NAME: ☐ Owner ☐ Renter	IF RENT, PROPERTY MANAGER(S): OWNER:
STREET ADDRESS: CITY, STATE AND ZIP: PHONE:	STREET ADDRESS: CITY, STATE AND ZIP: PHONE:
Is nearest upstream manhole visibly higher than the drain/fixture that overflowed? ☐ Yes ☐ No	
# OF PEOPLE LIVING AT RESIDENCE:	

Approximate Age of Home:	# of Bathrooms:	# of Rooms Affected:
Approximate Amount of Spill (gallons):	Approximate Time Sewage Has Been Sitting (hrs/days):	

Numbers of Photographs or Videos Taken: ☐ Photographs ☐ Video	What device are photos/video stored on?

Does property have a Property Line Cleanout or BPD?	☐ YES ☐ NO ☐ Unknown
If yes, was the Property Line Cleanout/BPD operational at the time of the overflow?	☐ YES ☐ NO ☐ Unknown
Have there ever been any previous spills at this location?	☐ YES ☐ NO ☐ Unknown
Has the resident had any plumbing work done recently? *If YES, please describe:*	☐ YES ☐ NO

GO TO SIDE B

© 2004-2014 DKF Solutions Group All rights reserved.

Sanitary Sewer Backup Response Packet

First Responder Form

B-3
Side B

SANITARY SEWER LINE BLOCKAGE LOCATION

PLEASE CHECK THE BOXES THAT DESCRIBE YOUR OBSERVATIONS:	
Customer Cleanout Was: ☐ Non-Existent ☐ Full ☐ Empty	Public Cleanout was: ☐ Non-Existent ☐ Full ☐ Empty

On the diagram below, indicate the location of the sewer line and where the problem occurred.

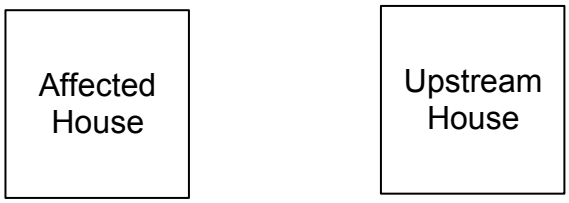

Did sewage go under buildings? ☐ Yes ☐ No ☐ Unsure

Recommended Follow-Up Action(s):

Place completed form in Sewer Backup Envelope and follow routing instructions

© 2004-2014 DKF Solutions Group All rights reserved.

Sanitary Sewer Backup Response Packet

Start Time Determination Form

B-4

SSO Start Date: _____ Location: _____

Accurate start time determination is an essential part of SSO volume estimation. Depending on the flow rate, being even one minute off can have a huge impact on the volume estimation. Be as precise as possible. Do not round to quarter hour increments. Start time must be based on all available information (interviews with neighbors, emergency responders, etc.)

What time was the Town notified of the SSO? _____ □ AM □ PM

Who notified the Town? _____

Did they indicate what time they noticed the SSO? □ YES □ NO If yes, what time? _____ □ AM □ PM

Who at the Town received the notification? _____

What time did the crew arrive at the site of the SSO? _____ □ AM □ PM

Who was interviewed regarding the start time of the SSO? Include their name, contact information, and the statement they provided:

Name	Contact Information	Statement

Describe in detail how you determined the start time for this particular SSO:

SSO Start Date: _____ SSO Start Time: _____ □ AM □ PM

SSO End Date: _____ SSO End Time: _____ □ AM □ PM

SSO Duration: _____ **minutes**

This form completed by:

Name: _____ Signature: _____

Job Title: _____ Date: _____

© 2004-2014 DKF Solutions Group All rights reserved.

WBSD CALL-OUT REPORT **Appendix B1**

Weather: _____Day of the Week: S-M-T-W-TH-F-S ☐ Take Picture(s)

1. Name of caller:_____Phone Number:_____
2. Address:_____ Cross Street:_____

3. LAH Call out Information:
Date: _____ Caller:_____ Location:_____
Call received: _____ LAH Crew Arrival: _____
LAH call to WBSD: _____ (As reported to WBSD by LAH)

3A. Called out by:_____time :_____a.m. / p.m. Date:_____
Arrival Time at site_____a.m./p.m. Date:_____
Source Control called out at: _____a.m. / p.m. Date:_____

4. Reported as: ☐private c/o overflowing ☐Overflowing manhole ☐Back up in home

4A. Is there a mainline stoppage: ☐YES ☐NO

5. Estimated GPM: _____ Flow Height in Inches:_____

6. Were you able to retrieve the entire overflow? ☐ Yes ☐No

7. Was the overflow returned to sanitary sewer? ☐ Yes ☐No ☐Partial ☐ N/A

8. Overflow saturated into soil? ☐Yes (Est'd Volume_____) ☐No ☐N/A
If yes to 6, 7 or 8 above did we clean up affected area? ☐Yes ☐No ☐N/A

9. Overflow to: **Estimated volume of SSO: _____**
☐ **Direct Inlet** **Estimated volume Recovered: _____**
☐ **Section of Storm Drain line** **Estimated volume Not Recovered: _____**
☐ **Drainage Ditch** ☐ Lined ☐ Unlined
☐ **Channel** ☐ Lined ☐ Unlined
☐ **Ultimate Destination_____Est'd Volume:_____**
Line cleared at:_____a.m. / p.m. Duration of overflow:_____
Blockage caused by _____ Op(s). Performed _____

10. Is the overflow contained ☐YES ☐NO If yes, How & Where:

Clean up methods used: ☐Vacuum/pump ☐ Hosed down & street swept ☐ Enzymes

11. Mainline: u/s_____to d/s_____
Overflowing manhole ID #_____ at _____

Method(s) used to estimate SSO Volume: ☐San Diego Method ☐Surface Area
☐____# SFR's U/S of Blockage ☐SSCSC Method ☐Soil Saturation ☐_____

12.

Staff	Unit	Time Called	T/A	Time Completed
_____	_____	_____	_____	_____
_____	_____	_____	_____	_____
_____	_____	_____	_____	_____
_____	_____	_____	_____	_____

Reported by:_____Date:_____
(Print Name)

Estimated Cost incurred: $_____

.....

GBA#_____ ☐Res. ☐Com. Event I.D.#_____Cert.#_____Time:_____

Initial Spill Calculation Worksheet

Depth / Inches	Depth / Feet
1/16	0.0052
1/8	0.0104
3/16	0.0156
1/4	0.0208
5/16	0.0260
3/8	0.0312
7/16	0.0364
1/2	0.0416
9/16	0.0468
5/8	0.0520
11/16	0.0572
3/4	0.0625
13/16	0.0677
7/8	0.0729
15/16	0.0781
1	0.083
2	0.166
3	0.250
4	0.333
5	0.416
6	0.500
7	0.583
8	0.666
9	0.750
10	0.833
11	0.916

WEST BAY Sanitary District

FORMULA FOR SURFACE AREA IN CUBIC FEET (cf)

(FOR A SQUARE OR RECTANGLE);

☐ $L_{(ft.)}$ x ☐ $W_{(ft.)}$ x ☐ $D_{(ft.)}$ = ☐ cf

☐ cf x 7.48 = ☐ Gallons

Site 1

☐ $L_{(ft.)}$ x ☐ $W_{(ft.)}$ x ☐ $D_{(ft.)}$ = ☐ cf

☐ cf x 7.48 = ☐ Gallons

Site 2

☐ $L_{(ft.)}$ x ☐ $W_{(ft.)}$ x ☐ $D_{(ft.)}$ = ☐ cf

☐ cf x 7.48 = ☐ Gallons

Site 3

☐

Total Estimated Spill Volume

Sites 1-2-3

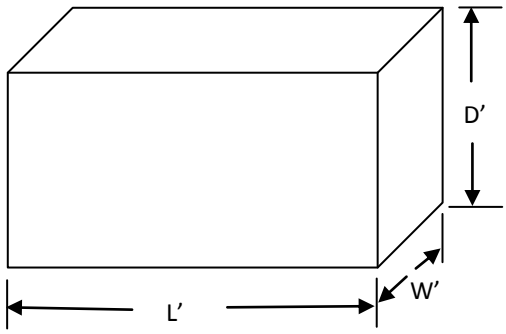

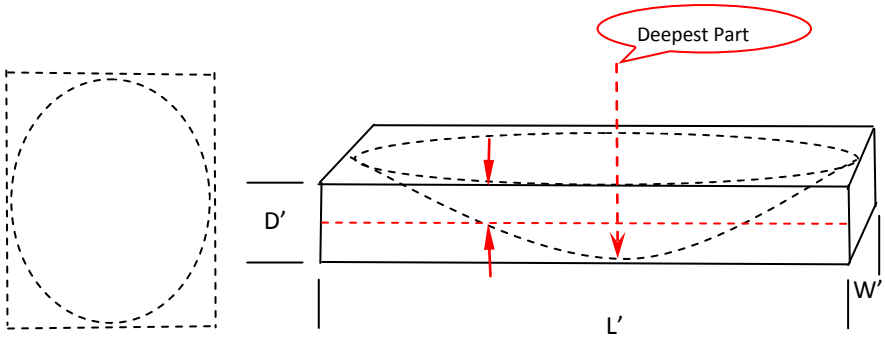

When measuring ponding and puddles, measure and record the deepest part, divide that number by 2. That will be considered the average depth of the pond or puddle. *Example: The deepest part of the ponding is 10" deep (10" ÷ 2= 5"), 5' in length and 3' in width. 1) Determine the Surface area in cubic Feet. L 5' x W 3' x 0.416 = 6.24 cf, 2) Multiply the cubic footage by 7.48, 6.24 x 7.48= 46.67 gallons.*

Math work must be reviewed, accepted & signed off by one Legally Responsible Official (LRO):

Date_____ Initial

☐ John Simonetti _____

☐ Jed Beyer _____

☐ Sergio Ramirez _____

Sanitary Sewer Backup Response Packet

Claims Submittal Checklist

Senior Engineer

1. **Complete the following information:**

   Title: _____

   Name: _____

   Phone: _____

   Today's Date: _____

2. **Copy the items listed below and retain originals for internal archiving purposes.**

3. **Place the originals back in the Backup Response Envelope and forward envelope with original forms to the Administrative Services Director:**

   - ☐ **Form B-3: First Responder Form**
   - ☐ **Form B-4: Start Time Determination Form**
   - ☐ **Form B-5: Claims Submittal Checklist** *(this form)*
   - ☐ **WBSD Call-Out Report (completed by WBSD)**
   - ☐ **WBSD Initial Spill Calculation Worksheet (completed by WBSD)**
   - ☐ **All photos taken: Check here if digital photographs will be forwarded separately** ☐
   - ☐ **Any other information you feel is important in this claim**

4. **Go to Regulatory Notifications Packet and make all appropriate notifications.**
5. **Coordinate with West Bay Sanitary District to complete a failure analysis.**

Administrative Services Director

1. **Verify claims packet is complete.**
2. **Notify York Risk Services Group**

   York Risk Services Group
   Attn: ABAG PLAN Claims Team
   1390 Willow Pass Road, Suite 400
   Concord, CA 94520

   Tiffany Roduit, Claims Specialist
   Tiffany.Roduit@YorkRSG.com
   (925) 349-3878 office
   (925) 808-5072 cell

© 2004-2014 DKF Solutions Group All rights reserved.

Town of Los Altos Hills CA
Overflow Emergency Response Plan

Customer Service Packet

Contents:

Form	Form Number
Customer Information Letter	CS-1
Claim Form	-2
Sewer Spill Reference Guide	pamphlet

Instructions:

1. Review the Customer Information letter to determine actions that need to be taken immediately.
2. See the Customer Information letter for information about filing a claim.
3. Review the Sewer Spill Reference Guide pamphlet.

If you have any questions contact:

Regarding Sewer Issues:	Public Works Director (650) 941-7222
Regarding Submitting a Claim for Damages:	Administrative Services Director (650) 941-7222

This packet provided by: _____ Phone: _____

Paquete informativo del servicio al cliente

Contenido:

Formulario	Número de formulario
Carta informativa para el cliente	CS-1
Formulario de Reclamación	-2
Guía de referencia sobre desbordes cloacales	folleto

Instrucciones:

1. Analice la carta informativa para el cliente a fin de determinar las medidas que se deben tomar de manera inmediata.
2. Consulte la carta informativa para el cliente a fin de obtener información sobre cómo presentar un reclamo.
3. Analice el folleto de la guía de referencia sobre desbordes cloacales.

En caso de preguntas, comuníquese con:

Para temas cloacales:	Director de Obras Públicas (650) 941-7222
Para presentar un reclamo por daños:	Director de Servicios Administrativos (650) 941-7222

Print on 6” x 9” envelope

© 2004 DKF Solutions Group, LLC. All rights reserved.

Sanitary Sewer Backup Response Packet

Customer Information Regarding Sewer Backup Claims

CS-1

Dear Property Owner:

We recognize that sewer back flow incidents can be stressful. The Town has prepared this brief set of instructions to help you minimize the impact of the loss by responding promptly to the situation.

The Town is not responsible for cleanup charges or damages caused by blockages in the property owner's sewer line or caused by code violations. At this time, the Town is investigating the cause of the loss and does not assume liability for damages. However, if our investigation determines the Town is responsible for this incident, the costs you incur for reasonable and necessary cleanup will be included in the settlement of your claim. Regardless of whether you or the Town is responsible for the loss, it is up to you to arrange for the repair of your property and to present a claim for consideration.

You or the property owner should immediately contact a firm for clean-up of the affected areas. If you do not know of a company to call for service, the following 24-hour emergency restoration companies are available to respond: *

Restoration Company	Location	Contact
American Technologies, Inc. (ATI)	25000 Industrial Blvd, Hayward, CA 94545	(510) 429-5000
Complete Drying	751 Laurel St #538, San Carlos, CA 94070	(650) 591-1599 / (925) 525-7262
Ideal Drying	1499 Evans Avenue, San Francisco, CA 94124	(800) 379-6881
Restoration Management	535 Getty Ct., Ste A, Benicia, CA 94510	(800) 400-5058 / (707) 750-6320
Restoration Management	32550 Central Ave., Union City, CA 94587	(800) 400-5058 / (510) 315-5400
Montgomery Sansom Ltd.	305 Adrian Road, Millbrae, CA 94030	(650) 777-9010
Britannia Cal Pacific	255 S Maple Ave, SSF, CA 94080	(650) 742-6490
Four Star Cleaning & Restoration	4302 Solar Way, Fremont, CA 94538	(800) 255-3333 / (510) 796-5900
Servpro	809 Laurel Street, #422, San Carlos, CA 94070	(800) 737-8776 / (650) 591-4137
Vital Restoration 9-1-1	6 South Linden Ave. Unit #9, South San Francisco, CA 94080	(650) 262-4545 / (650) 873-7867
Service Master	2731 Fair Oaks Ave., Redwood City, CA 94063	(650) 299-9080
Service Master	439 Eccles Ave. South San Francisco, CA 94080	(415) 584-6100
Service Master	2220 W Winton Ave., Hayward, CA 94545	(800) 480-8439 / (510) 300-2990

* This list is provided as a resource only. The Town does not require or endorse the use of any of these firms. This list is not to be construed as exclusive, comprehensive or limiting in any way. Qualified contractors can be found in the Yellow Pages under "Water Damage Restoration" or "Fire & Water Damage Restoration". However, be sure you hire a firm with experience in sewer backups and enough resources to get the job done quickly.

What you need to do now:

- Contact a restoration company for clean up and removal of affected surfaces.
- Do not attempt to clean the area yourself, let the company you hire handle this.
- Keep people and pets away from the affected area(s).
- Turn off heating/air conditioning systems.
- Turn off any appliances that use water.
- Prevent any material from reaching floor vents to prevent contamination.
- Do not remove items from the area –the company you hire will handle these contents.
- If you had recent plumbing work, contact your plumber or contractor.
- Contact your homeowner's insurance carrier to report a claim.
- File your claim with the Administrative Services Director at 26379 Fremont Road, Los Altos Hills, CA 94022, (650) 941-7222, as soon as practical. The California Government Code, Sections 900 -960, requires filing a written claim and outlines specific time lines and notice procedures that must be used.
- Call the Town's Claims Administrator and provide a number where you can be reached:
  Association of Bay Area Governments (ABAG) Tiffany Roduit at (952) 349-3878

Important Legal Notice: For your protection, read carefully, obtain a reliable translation, and/or consult your attorney.

© 2004-2014 DKF Solutions Group All rights reserved.

Información del cliente sobre reclamos por desbordes cloacales

Estimado Propietario:

Somos conscientes de que los incidentes de alcantarillado de flujo puede ser estresante. La ciudad ha preparado este breve conjunto de instrucciones que le ayudarán a minimizar el impacto de la pérdida por responder rápidamente a la situación.

La Ciudad no es responsable de los gastos de limpieza y daños causados por los bloqueos en línea de la alcantarilla del propietario del inmueble o causados por violaciónes de código. En este momento, la Ciudad está investigando la causa de la pérdida y no asume responsabilidad por los daños y perjuicios. Sin embargo, si nuestra investigación determina la Ciudad es responsable de este incidente, los gastos incurridos para la limpieza razonable y necesario se incluirán en la liquidación de su reclamo. Independientemente de si o de la Ciudad es responsable de la pérdida, es a usted para organizar la reparación de su propiedad y que presente una reclamación para su consideración.

Usted o el dueño de la propiedad debe inmediatamente ponerse en contacto con una empresa para la limpieza de las zonas afectadas. Si usted no sabe de una empresa de solicitar un servicio, las siguientes 24 horas, empresas de restauración de emergencia están disponibles para responder:*

Restoration Company	Location	Contact
American Technologies, Inc. (ATI)	25000 Industrial Blvd, Hayward, CA 94545	(510) 429-5000
Complete Drying	751 Laurel St #538, San Carlos, CA 94070	(650) 591-1599 / (925) 525-7262
Ideal Drying	1499 Evans Avenue, San Francisco, CA 94124	(800) 379-6881
Restoration Management	535 Getty Ct., Ste A, Benicia, CA 94510	(800) 400-5058 / (707) 750-6320
Restoration Management	32550 Central Ave., Union City, CA 94587	(800) 400-5058 / (510) 315-5400
Montgomery Sansom Ltd.	305 Adrian Road, Millbrae, CA 94030	(650) 777-9010
Britannia Cal Pacific	255 S Maple Ave, SSF, CA 94080	(650) 742-6490
Four Star Cleaning & Restoration	4302 Solar Way, Fremont, CA 94538	(800) 255-3333 / (510) 796-5900
Servpro	809 Laurel Street, #422, San Carlos, CA 94070	(800) 737-8776 / (650) 591-4137
Vital Restoration 9-1-1	6 South Linden Ave. Unit #9, South San Francisco, CA 94080	(650) 262-4545 / (650) 873-7867
Service Master	2731 Fair Oaks Ave., Redwood City, CA 94063	(650) 299-9080
Service Master	439 Eccles Ave. South San Francisco, CA 94080	(415) 584-6100
Service Master	2220 W Winton Ave., Hayward, CA 94545	(800) 480-8439 / (510) 300-2990

* Esta lista se proporciona como un único recurso. La ciudad no necesita ni aprueba el uso de cualquiera de estas empresas. Esta lista no debe ser interpretado como exclusiva, completa o limitar de ninguna manera. Contratistas calificados se pueden encontrar en las páginas amarillas bajo "Restauración de daños causados agua" o "Fuego y Agua Restauración de daños causados". Sin embargo, asegúrese de contratar a una empresa con experiencia en las copias de seguridad de drenaje y los recursos suficientes para hacer el trabajo rápidamente.

Lo que necesita saber en este momento:

- Póngase en contacto con una empresa de restauración para la limpieza y eliminación de las superficies afectadas.
- No intente limpiar el área, deje que la empresa de contratar a manejar esto.
- Mantenga a las personas ya las mascotas alejados de la zona afectada (s).
- Apague la calefacción / aire acondicionado.
- Apague todos los electrodomésticos que utilicen agua.
- Evite que el material alcance respiraderos del piso para evitar la contaminación.
- No quitar elementos de la zona-la empresa que se encargará de contratar a estos contenidos.
- Si ha tenido el trabajo de plomería reciente, póngase en contacto con un plomero o contratista.
- Póngase en contacto con soporte de su seguro de propietario para presentar una reclamación.
- Presente su solicitud con el Director de Servicios Administrativos, 26379 Fremont Road, Los Altos Hills, CA 94022, (650) 941-7222, tan pronto como sea posible. El Código de Gobierno de California, Secciones 900 -960, requiere la presentación de una reclamación por escrito y se esbozan líneas de tiempo específicos y los procedimientos de notificación que deben ser utilizados.
- Llame al Administrador de la Ciudad de Reclamaciones y proporcionar un número de teléfono donde se puede llegar: Asociación de Gobiernos del Área de la Bahía (ABAG), Tiffany Roduit en (952) 349-3878.

© 2004-2014 DKF Solutions Group All rights reserved.

CLAIM AGAINST THE TOWN OF LOS ALTOS HILLS

Please return to: City Clerk
26379 Fremont Road
Los Altos Hills, CA 94022

COMPLETE THE FOLLOWING, ADDING ADDITIONAL SHEETS AS NECESSARY

1. CLAIMANT'S NAME (Print):_____

2. CLAIMANT'S ADDRESS: _____
(Street or P.O. Box Number-City-State-ZipCode)

3. AMOUNT OF CLAIM $_____ HOME PHONE:_____
(Attach Copies of bills/estimates)
WORK PHONE:_____

IF AMOUNT CLAIMED IS MORE THAN $10,000 INDICATE WHERE JURISDICTION RESTS:

Limited Civil Case _____

Unlimited Civil Case _____

4. ADDRESSES TO WHICH NOTICES ARE TO BE SENT IF DIFFERENT FROM LINES 1 AND 2:

(Print): Name _____

Street or P.O. Box Number _____

City-State-Zip Code _____

5. DATE OF INCIDENT:_____ TIME OF INCIDENT:_____

LOCATION OF INCIDENT:

6. DESCRIBE THE INCIDENT OR ACCIDENT INCLUDING YOUR REASON FOR BELIEVING THAT THE TOWN IS LIABLE FOR YOUR DAMAGES:

7. DESCRIBE ALL DAMAGES WHICH YOU BELIEVE YOU HAVE INCURRED AS A RESULT OF THE INCIDENT:

8. NAME(S) OF PUBLIC EMPLOYEE(S) CAUSING THE DAMAGES YOU ARE CLAIMING:

_____ _____

_____ _____
Signature of Claimant Date

Any person who, with intent to defraud, presents any false or fraudulent claim may be punished by imprisonment or fine or both.

Note: You must file a claim in compliance with <u>Government Code</u> Section 911.2.

B2 SANITARY SEWER OVERFLOW PREVENTION ASSESSMENT

☐ SMART COVER ALARM RESPONSE ☐ MAINLINE STOPPAGE RESPONSE

First Responder

_____ DATE TIME

_____ CAUSE OF BLOCKAGE / OPERATION PERFORMED

_____ MAINLINE DESIGNATION U/S TO D/S ADDRESS

Notification: ☐ Callout ☐ Routine Maintenance

Blockage approximately @_____ feet u/s of manhole #_____ Partial Stoppage:Y / N
Responding Crew : _____ , _____ , _____ ,_____
Vehicle / Equipment: _____ , _____ , _____ , _____ Time Completed:_____

GBA/Lucity

☐ LINE LAST CLEANED ON:_____ S/R_____ OP. PERFORMED BY:_____ W/O#_____

_____ TYPE OF MATERIAL– SIZE-AGE

☐36 ☐12 ☐6 ☐3 CURRENT CLEANING SCHEDULE

CCTV

CCTV—DATE: _____ START TIME:_____ COMPLETION TIME:_____
LENTGH OF RUN IN FEET:_____Crew Members: _____ , _____ , _____
Vehicle / Equipment: _____ , _____ , _____ , _____
OBSERVATION AND ASSESSMENT: _____

RECOMMENDED MITIGATION: ☐ Reclean line ☐ Pipe Patch ☐ Dig Up
☐ RECOMMENDED MONTHLY SCHEDULE CHANGE: ☐36 ☐12 ☐6 ☐3
☐ NOTE SPECIAL CLEANING REQUIREMENTS:_____
Recommended by:_____

Mtc. Supt.

☐ MEETING ON ASSESSMENT /MITIGATION :_____ OUTCOME:_____

Re-hab

RE-HAB– START DATE :_____ COMPLETION DATE & TIME: _____
W/O #_____
Crew Members: _____ , _____ , _____ ,_____ , _____
EQUIPMENT: _____ , _____ , _____ , _____ , _____
COMMENTS:_____

RCC

☐ Any change or deviation from the OERP? _____
☐ What worked and what improvements could be made?_____
☐ Recommended changes to the OERP?_____

STAFF	EQUIPMENT	TIME	ESTIMATED COST TO MITIGATE
_____	_____	_____	$_____
_____	_____	_____	$_____
_____	_____	_____	$_____
_____	_____	_____	$_____
_____	_____	_____	$_____

TOTAL PROJECT COST $_____

GBA # _____

REPORT ON CONDITIONS REQUIRING FOLLOW-UP WORK

DATE: _____

MAIN LINE DESIGNATION / ADDRESS / MANHOLE/
SUBASIN #(IF CCTV NEEDED): _____

_____

_____

REASON SUBMITTED (CIRCL): (Follow-up, needs repair work, mainline only, CCTV)

_____

_____

_____

_____

REPORTED BY: _____

SUPERINTENDENT DISPOSITION: DATE: _____

_____

_____

_____

_____

_____
Signature

EVALUATION/ACTION INITIATED: DATE: _____

_____

_____

_____

_____

_____
Signature/Position

How a Sewer System Works

A property owner's sewer pipes are called ***service laterals*** and are connected to larger local main and regional trunk lines.
Service laterals run from the connection at the home to the connection with the public sewer. These laterals are the responsibility of the property owner and must be maintained by the property owner.

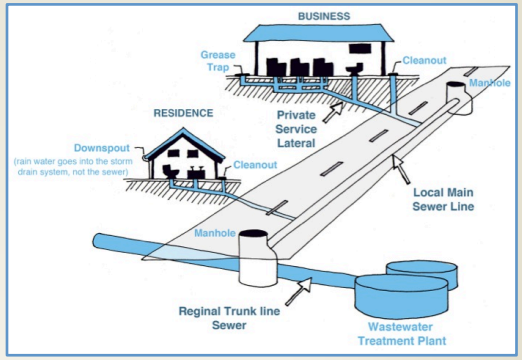

Is my home required to have a backflow prevention device?

Section 710.1 of the Uniform Plumbing Code (U.P.C.) states: *"Drainage piping serving fixtures which have flood level rims located below the elevation of the next upstream manhole cover or private sewer serving such drainage piping* ***shall*** *be protected from backflow of sewage by installing an approved type of backwater valve."*
The intent of Section 710.1 is to protect the building interior from mainline sewer overflows or surcharges.

Additionally, U.P.C. 710.6 states: *"Backwater valves* ***shall*** *be located where they will be accessible for inspection and repair at all times and, unless continuously exposed, shall be enclosed in a masonry pit fitted with an adequately sized removable cover."*

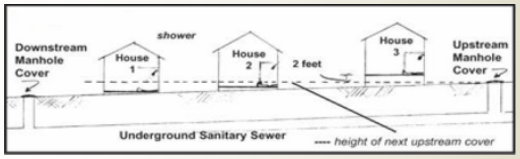

If you have a sewage spill from your private sewer line that impacts storm drains, waterways or public property, contact:

Town of Los Altos Hills
(650) 941-7222

Santa Clara County Department of Environmental Health
(408) 918-3400
California Health and Safety Code, Sections 5410-5416 requires:

- No person shall discharge raw or treated sewage or other waste in a manner that results in contamination, pollution, or a nuisance.
- Any person who causes or permits a sewage discharge to any state waters:
  - Must immediately notify the local health agency of the discharge.
  - Shall reimburse the local health agency for services that protect the public's health and safety.
  - Who fails to provide the required notice to the local health agency is guilty of a misdemeanor and shall be punished by a fine (between $500–$1,000) and/or imprisonment for less than one year.

San Francisco Regional Water Quality Control Board
(510) 622-2300
Requires the prevention, mitigation, response to, and reporting of sewage spills.

California Governor's Office of Emergency Services (CalOES)
(800) 852-7550
California Water Code, Article 4, Chapter 4, Sections 13268-13271 & California Code of Regulations, Title 23, Division 3, Chapter 9.2, Article 2, Sections 2250-2260 require:

- Any person who causes or permits sewage in excess of 1,000 gallons to be discharged to state waters shall immediately notify the Office of Emergency Services.
- Any person who fails to provide the notice required by this section is guilty of a misdemeanor and shall be punished by a fine (less than $20,000) and/or imprisonment for not more than one year.

Sewer Spill Reference Guide

Your Responsibilities as a Private Property Owner

Provided to you by:

Town of Los Altos Hills

26379 Fremont Road
Los Altos Hills, CA 94022

(650) 941-7222
www.losaltoshills.ca.gov

Copyright © 2004-2014
DKF Solutions Group
All rights reserved.

How do sewage spills happen?

Sewage spills occur when the wastewater in underground pipes overflows through a manhole, cleanout, or broken pipe. Most spills are relatively small and can be stopped and cleaned up quickly, but left unattended they can cause health hazards, damage to homes and businesses, and threaten the environment, local waterways, and beaches.

CAUTION!

When trying to locate a sewer problem, never open manholes or other public sewer structures. Only our crews are allowed to open & inspect these structures.

Common causes of sewage spills

- Grease build-up
- Tree roots
- Broken/cracked pipes
- Missing or broken cleanout caps
- Undersized sewers
- Groundwater/rainwater entering the sewer system through pipe defects and illegal connections

Prevent most sewage backups with a Backflow Prevention Device

This type of device can help prevent sewage backups into homes and businesses. If you don't already have a Backflow Prevention Device, contact a professional plumber or contractor to install one as soon as possible.

Protect the environment!

If you let sewage from your property discharge to a gutter or storm drain, you may be subject to penalties and/or out-of-pocket costs for clean-up and enforcement efforts. A property owner may be charged for costs incurred by agencies responding to spills from private properties.

What to look for:

Sewage spills can be a very noticeable gushing of water from a manhole or a slow water leak that may take time to be noticed. Don't dismiss unaccounted-for wet areas. Look for:

- Drain backups inside the building.
- Wet ground and/or water leaking around manhole lids onto your street.
- Leaking water from cleanouts or outside drains
- Unusual odorous wet areas: sidewalks, external walls, ground/landscape around a building.

The following are indicators of a possible obstruction in your sewer line:

- Water comes up in floor drains, showers or toilets.
- Toilets, showers or floor drains below ground level drain very slowly.

What to do if there is a spill:

Immediately notify the Town of Los Altos Hills. Our crews locate the blockage and determine if it is in the public sewer; if it is the crew removes the blockage and arranges for cleanup.

If the backup is in your private internal plumbing or in the private service laterals, you are required to immediately:

- Control and minimize the spill by shutting off or not using the water
- Keep sewage out of the storm drain system using sandbags, dirt and/or plastic sheeting
- Call a plumbing professional to clear blockages and make repairs as needed. Look in the yellow pages under "Plumbing Drain & Sewer Cleaning" or "Sewer Contractors."
- Always notify your sewer/public works department or public sewer district of sewage spills.

Spill cleanup inside the home:

For large clean ups, a professional cleaning firm should be contacted to clean up impacted areas, You can locate local firms by looking in the Yellow Pages under "Water Damage" or "Fire Damage." If you hire a contractor, it is recommended to get estimates from more than one company. Sometimes, homeowner's insurance will pay for the necessary cleaning due to sewer backups. Not all policies have this coverage, so check with your agent.

If you decide to clean up a small spill inside your home, protect yourself from contamination by observing the following safety measures. Those persons whose resistance to infection is compromised should not attempt this type of clean up.

Other Tips:

- Keep children and pets out of the affected area until cleanup has been completed.
- Turn off heating/air conditioning systems
- Wear rubber boots, rubber gloves, and goggles during cleanup of the affected area.
- Discard items that cannot be washed and disinfected (such as: mattresses, rugs, cosmetics, baby toys, etc.)
- Remove and discard drywall and insulation that has been contaminated with sewage or flood waters.
- Thoroughly clean all hard surfaces (such as flooring, concrete, molding, wood and metal furniture, countertops, appliances, sinks and other plumbing fixtures) with hot water and laundry or dish detergent.
- Help the drying process with fans, air conditioning units, and dehumidifiers.
- After completing cleanup, wash your hands with soap and water. Use water that has been boiled for 1 minute (allow the water to cool before washing your hands) OR use water that has been disinfected (solution of 1/8 teaspoon of household bleach per 1 gallon of water). Let it stand for 30 min. If water is cloudy, use ¼ teaspoon of household bleach per 1 gallon of water.
- Wash clothes worn during cleanup in hot water and detergent (wash apart from uncontaminated clothes).
- Wash clothes contaminated with sewage in hot water and detergent. Consider using a Laundromat until your onsite wastewater system has been professionally inspected and serviced.
- Seek immediate attention if you become injured or ill.

Spill cleanup outside the home:

- Keep children and pets out of the affected area until cleanup has been completed.
- Wear rubber boots, rubber gloves, and goggles during cleanup of affected area.
- Clean up sewage solids (fecal material) and place in properly functioning toilet or double bag and place in garbage container.
- On hard surfaces areas such as asphalt or concrete, it is safe to use a 2% bleach solutions, or ½ cup of bleach to 5 gallons of water, but don't allow it to reach a storm drain as the bleach can harm the environment.
- After cleanup, wash hands with soap and water. Use water that has been boiled for 1 minute (allow to cool before washing your hands) OR use water that has been disinfected (solution of 1/8 teaspoon of household bleach per 1 gallon of water). Let it stand for 30 min. If water is cloudy, use ¼ teaspoon of household bleach per 1 gallon of water.
- Wash clothes worn during cleanup in hot water and detergent (wash apart from uncontaminated clothes).
- Wash clothes contaminated with sewage in hot water and detergent. Consider using a Laundromat until your onsite wastewater system has been professionally inspected and serviced.
- Seek immediate attention if you become injured/ill.

Town of Los Altos Hills

On (date) _____, at (location) _____ , we responded to a reported blockage of the sanitary sewer service to your property.

We discovered a blockage in:

- ❒ The sanitary sewer main and cleared the line
- ❒ Your sanitary sewer lateral, which is your responsibility to maintain.

If you require assistance to clear your portion of the lateral you can look on the Internet or in the Yellow Pages of your telephone book under “Sewer Contractors” or “Plumbing Drains & Sewer Cleaning”. If you plan to hire a contractor we recommend getting estimates from more than one company.

Town of Los Altos Hills representative notes: _____

_____

_____

Town of Los Altos Hills Representative:

_____

For questions or comments, please call

Town of Los Altos Hills

(650) 941-7222

Town of Los Altos Hills

On (date) _____, at (location) _____ , we responded to a reported blockage of the sanitary sewer service to your property.

We discovered a blockage in:

- ❒ The sanitary sewer main and cleared the line
- ❒ Your sanitary sewer lateral, which is your responsibility to maintain.

If you require assistance to clear your portion of the lateral you can look the Internet or in the Yellow Pages of your telephone book under “Sewer Contractors” or “Plumbing Drains & Sewer Cleaning”. If you plan to hire a contractor we recommend getting estimates from more than one company.

Town of Los Altos Hills representative notes: _____

_____

_____

Town of Los Altos Hills Representative:

_____

For questions or comments, please call

Town of Los Altos Hills

(650) 941-7222

© 2004-2014 DKF Solutions Group, LLC. All rights reserved.

Appendix E – Document 2
WEST BAY Standard Operating Guidelines for Sanitary Sewer Overflow

WEST BAY Standard Operating Guidelines for Sanitary Sewer Overflow Response

6.0 - Overflow Emergency Response Plan

The development of a comprehensive overflow emergency response plan (OERP) is to allow the Town of Los Altos Hills (Town) respond quickly and efficiently to an overflow incident, in order to mitigate damage and prevent public health hazard associated with the spills. Per State Water Resources Control Board Order No. 2006-0003, all agencies that own and operate collection systems greater than a mile must have an OERP in place.

The Town owns and maintains approximately 60 miles of collection system, which is contracted to WEST BAY to manage and operate. The overflow response procedure is intended to outline the minimum steps to be taken by collection system personnel. The procedural steps indicated are intended to identify baseline requirements. All steps will not apply in every case. Additional steps may be necessary in some cases. The procedures must be used based on experience with the collection system and applicable regulatory provisions. It is the goal of this document to establish and follow guidelines to enable personnel to recognize, assess and remedy any Sanitary Sewer Overflow (SSO) in an expedient manner. Further, it is intended to provide steps to ensure minimal environmental impact to receiving waters of the United States of America, and to minimize exposure to the general public and to private property.

The developed plan includes the following items:

- Proper notification procedures.
- Appropriate response to sanitary sewer overflows (SSOs).
- Procedures to report and notify appropriate regulatory agencies and potentially affected entities.
- Procedures to ensure that appropriate staff and contractor personnel are aware of and follow an OERP and are appropriately trained.
- A program to ensure that all reasonable steps are taken to contain and prevent the discharge of untreated and partially treated wastewater to waters of the United States.

The Town and WEST BAY have implemented a proactive approach in preventing SSOs from occurring. Our approach includes the following:

- Aggressive cleaning and inspections of troubled areas within the system.
- A Computerized Maintenance and Management System (CMMS), which allows the Town to easily track and update troubled spots within the database system for automated scheduling and maintenance purposes.
- Implementation of CMMS in a structured approach for the purpose of scheduling, monitoring, evaluating and reporting the collection system performance.
- Inspections of lift stations for redundancy and to promote reliability and enough capacity to convey peak wet weather flows.

6.1 - Description of the Collection System

The collection system composes of 58.4 miles of gravity sewer mainlines and 0.3 miles force mains and two lift stations. These pipes are predominantly made of Vitrified Clay Pipe (VCP) and range in diameter from" 6" and the average age of pipes within the system is 50+ years.

6.1.1 - Sewer Pipelines

The system consists of 80% of 6-inch pipelines, 15% of 8-inch pipelines and 5% other pipe sizes. Dry weather related Sanitary Sewer overflow incidents occur predominantly in the 6-inch diameter pipelines due to root intrusion.

6.1.2 - Sewer Lift Stations

There are 2 lift stations in the collection system, each with at two pumps. The Town and WEST BAY's goal for each and every lift station is to have enough capacity to convey average and peak flows, improve the reliability and also redundancy of the system.

6.2 - Sanitary Sewer Overflow Potential Sites and Conditions

All dry weather related Sanitary Sewer Overflows predominantly occur within the 6-inch and 8-inch diameter pipes.

6.2.1 - Blockage

SSO will occur due to blockage of the sewer main by deposition of debris at a section of the pipe or manhole thereby releasing a built-up pressure of partially treated waste water at the manhole located upstream from the blockage.

Lack of maintenance of Lift station could lead to blockage at pumps which in turn prevent the pumps from circulating waste water from suction or discharge head section of the pumps due to the accumulation of debris.

6.3 - Prevention Methods

The Town and WEST BAY are committed to preventing Sanitary Sewer Overflow before they become a threat to human health. The incidence of SSO has continued to reduce drastically through the use of WEST BAY's Underground Asset Management (UGAM) approaches to manage the system.

6.3.1 - Preventative Maintenance/Hot Spot Cleaning

The cleaning program consists of preventative maintenance which includes hot spot cleaning and service call cleaning programs. Annually approximately 32 miles of gravity sewer lines are flushed by Hydro jetting and mechanical rodding methods.

The preventive maintenance program includes setting the cleaning frequencies for various diameters of pipes and hot spot locations. All segments with a repeat period of less than a year are categorized as “hot spots.”

The methods below are procedures for using the traditional hydro flushing equipment:

Hydro Flushing Procedure:

1. Locate the hydro flushing vehicle at the downstream location of the affected area.
2. Review the cleaning process steps with the Field Crew.
3. Employ the spinning nozzles to the Jetter hose, flight and nozzle assembly.
4. Engage the water pump and build pressure to 2000 psi.
5. Send nozzle forward to the upstream access manhole.
6. Turn off the water and conduct an inspection of the upstream manhole to ensure that you reach the location.
7. Employ the vacuum tubes to collect the debris and material.
8. Energize the nozzle to1,800 psi and 80 gallons per minute.
9. Slowly return the nozzle back at 60 feet per minute rate.
10. Monitoring the footage counter determine when you are 10 feet from the downstream manhole.
11. Stop hose and reduce to idle pressure and water flow and turn the pump off.
12. Using the vacuum truck remove any accumulation from the downstream manhole.
13. Observe the Jetter hose for excess grease and roots. If present repeat the process until clean.
14. Review cleaning process with Field Crew for training purposes. Document any changes in the standard operating procedure. Provide additional training based on the quality of the work performed.
15. Update standard operating procedures and provide training on a yearly basis.

Rodding equipment usually consists of rodding machine, cables and a cutting head. There are many different cutting heads designed for different types of drain lines that alleviate certain types of sewer and drain line stoppages. The cutting head attaches to the end of a cable that is inserted into the sewer or drain line. The cables are sectional and come in different lengths and diameters for different types of lines and stoppages. All cables look like long springs. The rodding machine consists of a motor and clutch to grab and spin the cables and cutting head at a low speed but at a very high torque. The spinning cutter head will cut through the different stoppages in an attempt to open the line. The coils in the cable help to feed the cable into the sewer line as the cable spins and to snare the debris stopping the line to help remove the debris from the line.

Jetting is a term used to describe a method used to open and scour drain lines with the use of high-pressure water. A Jetter uses water pressurized between 1200 to 1800 psi to cut through small root fibers, dirt, organic debris, grease and oil. Jetters are commonly used in restaurants and auto garages where grease from kitchens and oily sludge from automobiles collects in drain lines. While rodding can open a drain line coated with grease or oil, only a Jetter can scour the line removing the majority of the grease and oil.

Procedure:

1. Prior to operation of any of the accessory equipment on the Vactor truck, ensure that an adequate traffic safety plan has been implemented, that the parking brake is on and wheels chalked, the Power Take Off (PTO) is on, and that the proper PPE is being worn.
2. Using proper lifting techniques open the manhole in which you will be inserting the jet rodder.
3. Extend the hose reel out to its working position. Release the hose reel swivel lock, and swivel the hose reel to a position that allows the straightest line for the hose to travel from the reel to the pipe. Once in position, engage the swivel lock.
4. Using the hose reel control lever, extend enough hose out to enable you to place the head (tool) into the line (pipe) to be jet rodded.
5. Place the hose protector (tiger tail) so that it is between any surface that makes contact with the hose, and the hose itself.
6. Turn the throttle switch on, on the hose reel control panel.
7. Open the water valve, by turning the lever into the vertical position.
8. Turn the jet rodder on by flipping the jet rodder toggle switch to the “up” position.
9. Gradually increase the pressure using the throttle up switch. Watching the travel of the hose, control the speed and amount of hose you let out with the hose reel control lever.
10. When retrieving, or bringing the hose back in, use the hose reel control lever to control the speed of retrieval-making sure it is winding back on the hose reel properly.
11. When the head is approximately. 10ft. from the man-hole (as indicated by the change of color in the hose-orange to black) decrease the throttle, flip the jet rodder toggle switch to the down (off) position, and close the water valve by turning the lever to the horizontal position.
12. Reel in the hose until the head (tool) is exposed. Finish reeling in the hose, securing the head in the hose reel guide.
13. Swivel the hose reel back into its starting position, engaging the swivel lock and retract it back in.

JET RODDER HEAD/TOOL: Abnormal Conditions

1. Attempt to free the head/tool under power, moving it in and out.

2. If unable to dislodge the head/tool under power, turn off Jet Rodder, isolate water supply to Jet Rodder and relieve tension in the high - pressure water hose by letting the reel out.
3. If the head/tool is stuck close to the inlet, use a shovel of appropriate length (so that your person is above ground and no part of you is breaking the plane of the manhole) and keeping your body in a controlled/balanced position attempt to dislodge head/tool.
4. If unable to dislodge head/tool with moderate pressure on the shovel or tool, notify your supervisor, and cut the high-pressure hose at the manhole-street level.
5. At supervisor's instructions, initiate procedures for a confined space entry to attempt to retrieve the head/tool.
6. If still not able to retrieve the head/tool, the decision will be made to prepare for and emergency excavation to retrieve the head/tool.

The cleaning methods Includes utilizing traditional hydro flushing of sewer pipelines, root foaming to facilitate the removal and growth of deep rooted plants, and employment of biodegradable products to mitigate grease and grit accumulation in sewer pipelines and lift stations.

The Town completed a Root foaming cleaning method in 2011 and was subcontracted out to Dukes Root Control. Duke's certified applicators use specialized equipment to fill the affected sewer pipe with thick herbicidal foam. Foam with a thick, shaving cream consistency like Duke's is essential to adhere to roots and travel up the laterals. Duke's exclusive dense foam also packs more active chemicals in the spaces between the bubbles and has a longer retention time.

After inserting the hose from manhole to manhole, the foam is released, compressing against pipe surfaces, penetrating cracks, joints, and connecting sewers. Roots are killed on contact, decay naturally and slough off. Duke's applications prevent root re-growth for 3-5 years. Duke's uses the most effective chemicals and methods.

Duke's continually researches the most effective products available. Razorooter II® is the only diquat-based herbicide registered by the U.S. Environmental Protection Agency (EPA) for controlling nuisance tree roots in sanitary sewer line collection systems and received a classification of "evidence of non-carcinogenicity for humans" (USEPA Diquat R.E.D. Facts, July 1995).Duke's is able to provide safety for applicators, workers downstream, homeowners, and treatment plants. Roots are killed on contact inside and outside pipe walls, and the foam penetrates through wye connections to kill roots in lateral lines. Trees and other above ground vegetation are not harmed. In addition, no jet trucks or other potentially damaging equipment are used.

6.3.2 - Condition Assessment

Condition assessment of the collection system includes smoke testing, CCTV inspections survey, dye testing, flow monitoring and manhole inspections. WEST BAY is contracted to complete 18,000 feet of CCTV each year and also videos the mainline after the stoppage.

6.3.3 - Training and Equipments Maintenance

All Collection System employees are appropriately trained to implement all components of the Sanitary Sewer Management Plan. Operations and management team members are required to comply with all aspects of the emergency response plans.

WEST BAY's operators are crossed-trained on how to respond to sanitary sewer overflow, estimate SSO volume calculation etc. Our firm promotes cross-training of our collection system O&M team in other projects to stay abreast of industry. We also conduct initial and annual refresher training, on procedures to notify, respond to, report and impact mitigation of SSO events, through seminars organized by California Water Environmental Association and other notable associations in California. Drills are conducted to make sure all employees are properly equipped and efficient during an overflow incident. The collection group is supported and trained regionally by WEST BAY's Underground Asset Management (UGAM) group.

Our Collection System Field Crew performs daily inspections of equipment, such as the CCTV truck, cameras, combo hydro flushing trucks, computers, spare parts, portable pumps, generators, forklifts, traffic control equipment, etc. This is done to ensure that equipments are operating properly, with any found deficiencies reported to the Collection System Supervisor and Manager. They are then responsible for coordinating with local vendors, to implement the necessary repairs.

6.4 - Overflow Emergency Response

This section describes the emergency response plan procedures identified by the order set by state and local RWQCBs.

6.4.1 - Notification

The method used to notify the City of an occurrence of a sanitary sewer overflow include observation by the public, City employee, receipt of an alarm and physical observation by field employees during normal business hours.

6.4.2 - Receipt of Information Regarding an Overflow

When a member of the public notices an overflow or blockage, they report such incidence to the Town located at 26379 Fremont Road, Los Altos Hills, CA 94022, and City's telephone number for reporting Sanitary Sewer issues is 650-941-7222.

Normal business hours are Monday through Friday from 8:00 AM to 5:00 PM. Service calls received during normal business hours are taken immediately and passed on from the call center to the Collection Field Crew who respond within 60 minutes of an SSO event.

After normal business hours, service calls are taken by the designated standby person

Standby Personnel	Standby Phone	Office Phone
Sergio Ramierz	650-477-9885	650-321-0384

Figure below, at the top of the next page, provides a notification and response flow chart procedure for an SSO occurrence.

Figure: 6.3 Notification and Response Flow Chart

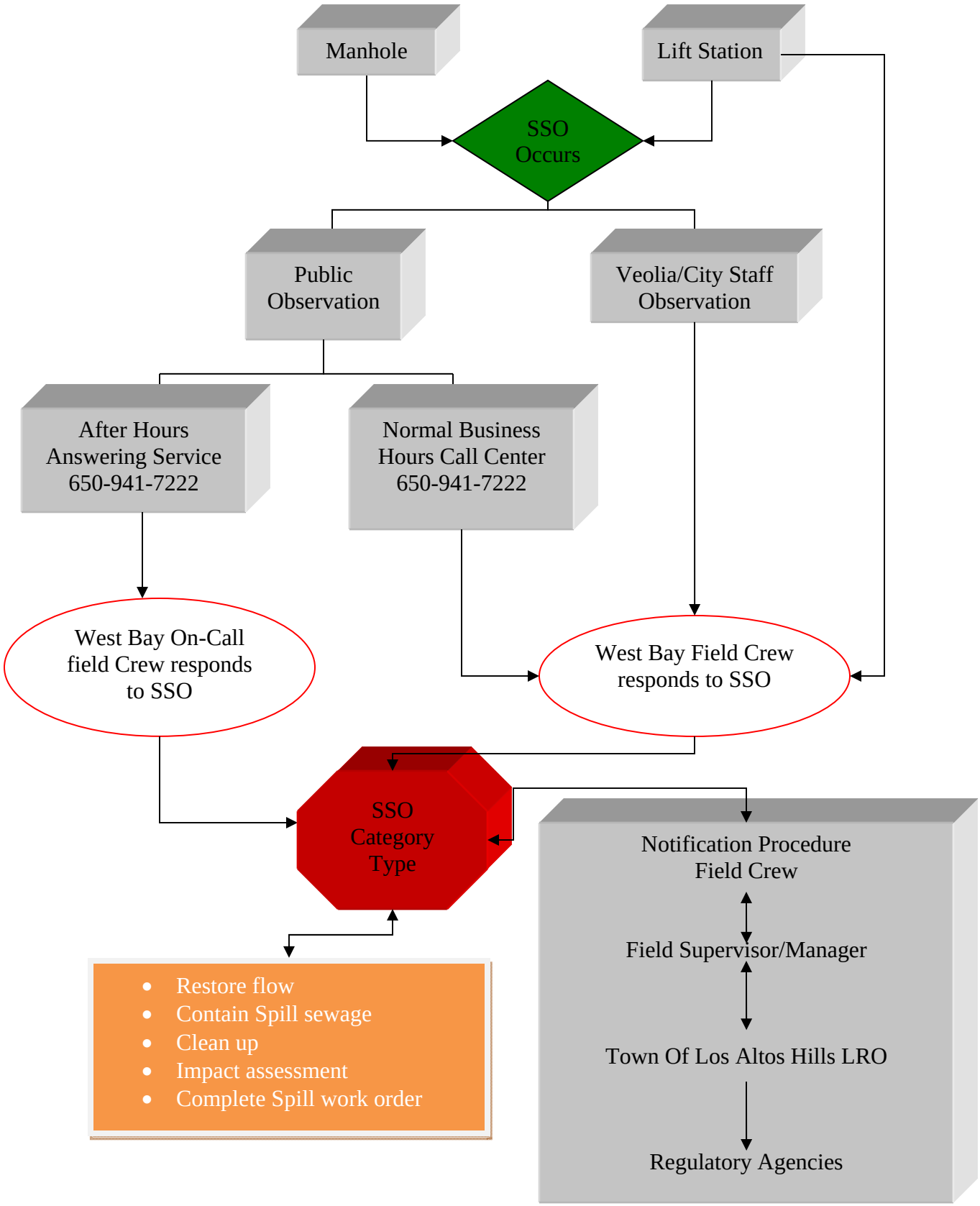

6.4.3 – Town of Los Altos Hills

Address: 26379 Fremont Road
Los Altos Hills, CA 94022
Phone #: 650-941-7222

6.4.4 - Contract Collection System Operator

- WEST BAY SANITARY DISTRICT
  - Project Manager: Sergio Ramierz 650-477-9885
  - Office Telephone: 650-321-0384

6.4.5 - Local Contact List

- Town of Los Altos Hills
  - Police Department
    - Emergency: 911
    - County Dispatch: 408-299-2505
  - Office of Emergency Services
    - Emergency: 911
    - Telephone: 408-808-7800
  - Street Maintenance
    - Telephone: 650-823-4547
  - Public Works Director
    - Telephone: 650-941-7222
  - Engineering Services
    - Telephone: 650-941-7222
  - City Manager
    - Telephone: 650-941-7222
  - City Storm and Waste Water Manager (LRO)
    - Cell: 650-452-2395
  - Source Control Inspector
    - Telephone: 650-941-7222
- WEST BAY -
    - Animesh Irkulla
      - Telephone: 408-621-8721
    - Uyiosa Oviawe, Sanitary Sewer & Storm Collection Manager
      - Cell: 510-332-2314
    - Rich Landi, Sanitary Sewer &Storm Field Supervisor
      - Cell: 650-868-7697

Directly Related Regulatory Agencies

- California Regional Water Resource Control Board
  - Telephone: 510-622-2300
- California Water Quality Control Board
  - Telephone: 916-341-5455
- California Department of Fish and Wildlife - Bay Delta Region
  - Telephone: 707-944-5500
- California Emergency Management Agency
  - Telephone: 916-845-8506

6.5 - Overflow Response Procedures

The field crew arrives at the spill site to perform an initial evaluation of the impact of the overflow. They decide what approach will result in minimal damage either by clearing the blockage first or initiating spill containment measures. The first responder must report the severity of the overflow incident to WEST BAY Field Supervisor and Collection Manager. The field crew logs all information requested on a Service Call form. Information from each call shall be placed on a separate Service Call form. Adequate information from the reporting party is attempted to be obtained including the name, address and telephone number of the person who reported the service call and the nature of the problem.

The field crew looks at the maps to determine location of sewers in the area of the reported overflow or problem. Upon arrival at the site crews look for apparent overflows. If an overflow or surcharged sewer main is located, check downstream manholes until a dry manhole (normal flow or less) is located. If a second person is needed to assist in clearing a stoppage; the responded should contact a second person. Contact homeowner or person who reported the problem. Where sewage has overflowed out of a manhole or cleanout, contain the area and collect all flow, paper and solids as possible. Flush manhole steps and shelves to clear debris whether or not overflows have occurred.

6.5.1 - Restore Flow

The Field Crew will set up on downstream manhole location with little or no flow. Utilizing combo hydro flushing equipment, the sewer mainline will be jet cleaned from downstream to upstream direction to hit, clear and vacuum the blockage from the pipe. Additionally, the Field Crew will observe when flow is returned to normal scouring velocity. Determine if other personnel are necessary, contact them if needed. Make arrangements for other personnel to bring additional equipment in the event of mainline stoppage

6.5.2 - Spill Containment

Significant amount of effort must be geared toward spill containment by the Field Crew to recover as much spills as possible from creeks, storm drain system,

ground surface, gutter and side walk. The first responder should attempt to contain as much of the spilled sewage as possible using the following steps:

- Determine the flow path of partially treated wastewater.
- Contain the spill volume flowing into the storm drain system.
- Plug storm drain manholes, catch basins, inlets and culverts with sandbags, air plugs and plastic mats in order to contain the spill.
- Notify the appropriate regulatory agencies if a spill is discovered in a creek.
- Mitigate the direct impact on creeks with guidelines from Department of Fish and Wildlife.
- Recover and capture as much sewage as possible by pumping directly to downstream manhole.

6.6 - Overflow Cleanup Procedure for Small and Large Spill

Overflow clean up procedures involve the use of the equipment identified in the contingency plans in order to prevent public contact and exposure to spill site. This serves to reduce the potential for human health hazard and environmental impact. Portable pumps, storage drums, vacuum trucks, brooms, shovels and other tools are available to Field Crew to facilitate cleaning activities.
Captured spill and recovered volume will be accounted for, and all spills to the ground surface will be washed down.

6.6.1 - Traffic and Crowd Control

Traffic and crowd control measures vary based on the size and potential impact of the overflow event. When appropriate, local police, fire department, and Town contacts should be notified to aide in addressing traffic and crowd control issues. The steps below shall be taken when dealing with traffic issues pertaining to spill volumes:

- “Small” Spill (less than 1,000 gallons):
  - Set up traffic cones to direct traffic from spill area.
  - Use staff personnel to control traffic and pedestrians.
- “Medium” Spill (1,000 gallons to 10,000 gallons):
  - Contact member agencies, as needed.
  - Perform lane closures, as needed.
  - Close any affected entrances or exits from all public and private facilities.
  - Place proper signage for any lane closures including contaminated area signs. Inform local law enforcement and/or fire department of lane/road closures and traffic control.
  - Use caution tape and barricades to protect pedestrians from contaminated areas.
- “Large” Spill (greater than or equal to 10,000 gallons):
  - Contact member agencies, as needed.
  - Inform local police and sheriff departments of any law enforcement needed for road closures and traffic control.

- Inform local fire department of lane and road closures.
- Delegate the responsibilities of informing the public of hazards to member agency team members.
- Use signage to inform public of potential hazards to public health and safety.
- Block public access to hazards using barricades, cones and caution tape.

Omit flushing and sampling during heavy storm events with heavy runoff, where flushing is not required and sampling would not provide meaningful results.

6.6.2 - Creeks/Water Bodies and Easement Subdivisions

The cleanup procedure for spills into waterways includes the following steps:

- Notify the California Emergency Management Agency/Department of Fish and Wildlife, as soon as possible.
- Determine if the creek and other affected water body, is safe to enter.
- Set up traffic control measures in order to prevent public access to beaches and creeks.
- Contain and recover as much of the spill as possible.
- If possible, block the creek downstream of the contaminated flow, based on visual evidence.
- Inform the local fire department of lane and road closures.
- Delegate the responsibilities of informing the public of hazards to member agency team members.

Cleaning procedures for spills associated with easement subdivisions follow the traffic and crowd control clean-up procedures specified for small and large spills.

6.6.3 - Overflow Volume Calculation

Methods for Estimating Spill Volume

A variety of approaches exist for estimating the volume of a sanitary sewer spill. These sections below documents the three methods that are most often employed. The person preparing the estimate should use the method most appropriate to the sewer overflow in question and use the best information available.

Method 1: Eyeball Estimate

The volume of “small” spills can be estimated using an “eyeball estimate”. To use this method imagine the amount of water that would spill from a bucket or a barrel. A bucket contains 5 gallons and a barrel contains 50 gallons. If the spill is larger than 50 gallons, try to break the standing water into barrels and then multiply by 50 gallons. This method is useful for contained spills up to approximately 200 gallons.

Method 2: Measured Volume
The volume of most "small" spills that have been contained can be estimated using this method. The shape, dimensions, and the depth of the contained wastewater are needed. The shape and dimensions are used to calculate the area of the spills and the depth is used to calculate the volume.

Common Shapes and Dimensions

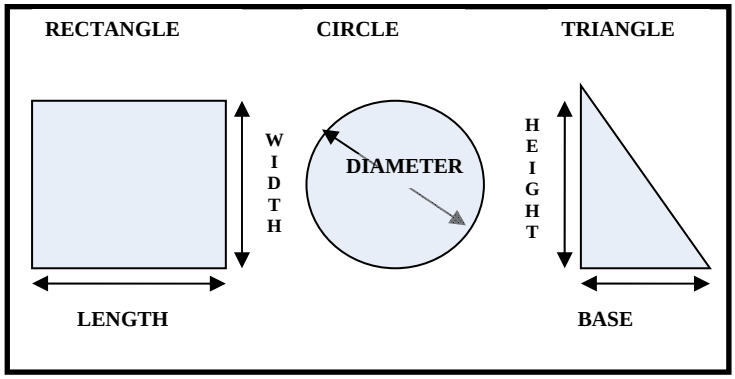

Step 1 Sketch the shape of the contained sewage (see figure above).
Step 2 Measure or pace off the dimensions.
Step 3 Measure the depth at several locations and select an average.
Step 4 Convert the dimensions, including depth, to feet.
Step 5 Calculate the area in square feet using the following formulas:
Rectangle: Area = length (feet) x width (feet)
Circle: Area = diameter (feet) x diameter (feet) x 0.79
Triangle: Area = base (feet) x height (feet) x 0.5
Step 6 Multiply the area (square feet) times the depth (in feet) to obtain the volume in cubic feet.
Step 7 Multiply the volume in cubic feet by 7.5 to convert it to gallons

Method 3: Duration and Flowrate
Calculating the volume of larger spills, where it is difficult or impossible to measure the area and depth, requires a different approach. In this method, separate estimates are made of the duration of the spill and the flowrate. The methods of estimating duration and flowrate are:

Duration: The duration is the elapsed time from the time the spill started to the time that the flow was restored.

Start time: The start time is sometimes difficult to establish. Here are some approaches:

Local residents can be used to establish start time. Inquire as to their observations. Spills that occur in rights-of-way are usually observed and reported promptly. Spills that occur out of the public view can go on longer. Sometimes observations like odors or sounds (e.g. water running in a

normally dry creek bed) can be used to estimate the start time. Changes in flow on a downstream flowmeter can be used to establish the start time. Typically the daily flow peaks are “cut off” or flattened by the loss of flow. This can be identified by comparing hourly flow data during the spill event with flow data from prior days. Conditions at the spill site change over time. Initially there will be limited deposits of toilet paper and other sewage solids. After a few days to a week, the sewage solids form a light colored residue. After a few weeks to a month, the sewage solids turn dark. The quantity of toilet paper and other materials of sewage origin increase over time. These observations can be used to estimate the start time in the absence of other information. Taking photographs to document the observations can be helpful if questions arise later in the process. It is important to remember that spills may not be continuous. Blockages are not usually complete (some flow continues). In this case the spill would occur during the peak flow periods (typically 10:00 to 12:00 and 13:00 to 16:00 each day). Spills that occur due to peak flows in excess of capacity will occur only during, and for a short period after, heavy rainfall.

End time: The end time is usually much easier to establish. Field crews on-site observe the “blow down” that occurs when the blockage has been removed. The “blow down” can also be observed in downstream flowmeters.

Flow Rate: The flowrate is the average flow that left the sewer system during the time of the spill.

There are three common ways to estimate the flowrate:

1. *The San Diego Manhole Flowrate Chart*: This chart, shows sewage flowing from manhole covers at a variety of flowrates. The observations of the field crew can be used to select the appropriate flowrate from the chart. If possible, photographs are useful in documenting basis for the flowrate estimate.

2. *Flowmeter*: Changes in flows in downstream flowmeters can be used to estimate the flowrate during the spill.

3. *Counting Connections*: Once the location of the spill is known, the number of upstream connections can be determined from the sewer maps. Multiply the number of connections by 200 to 250 gallons per day per connection or 8 to 10 gallons per hour per connection.

   For example: 22 upstream connections x 9 gallons per hour per connection
   = 198 gallons per hour / 60 minutes per hour
   = 3.3 gallons per minute

Spill Volume: Once duration and flowrate have been estimated, the volume of the spill is the product of the duration in hours or days and the flowrate in gallons per hour or gallons per day.

For example:

Spill start time = 11:00
Spill end time = 14:00
Spill duration = 3 hours
3.3 gallons per minute x 3 hours x 60 minutes per hour
= 594 gallons

Manhole Overflow Flowrate Guide

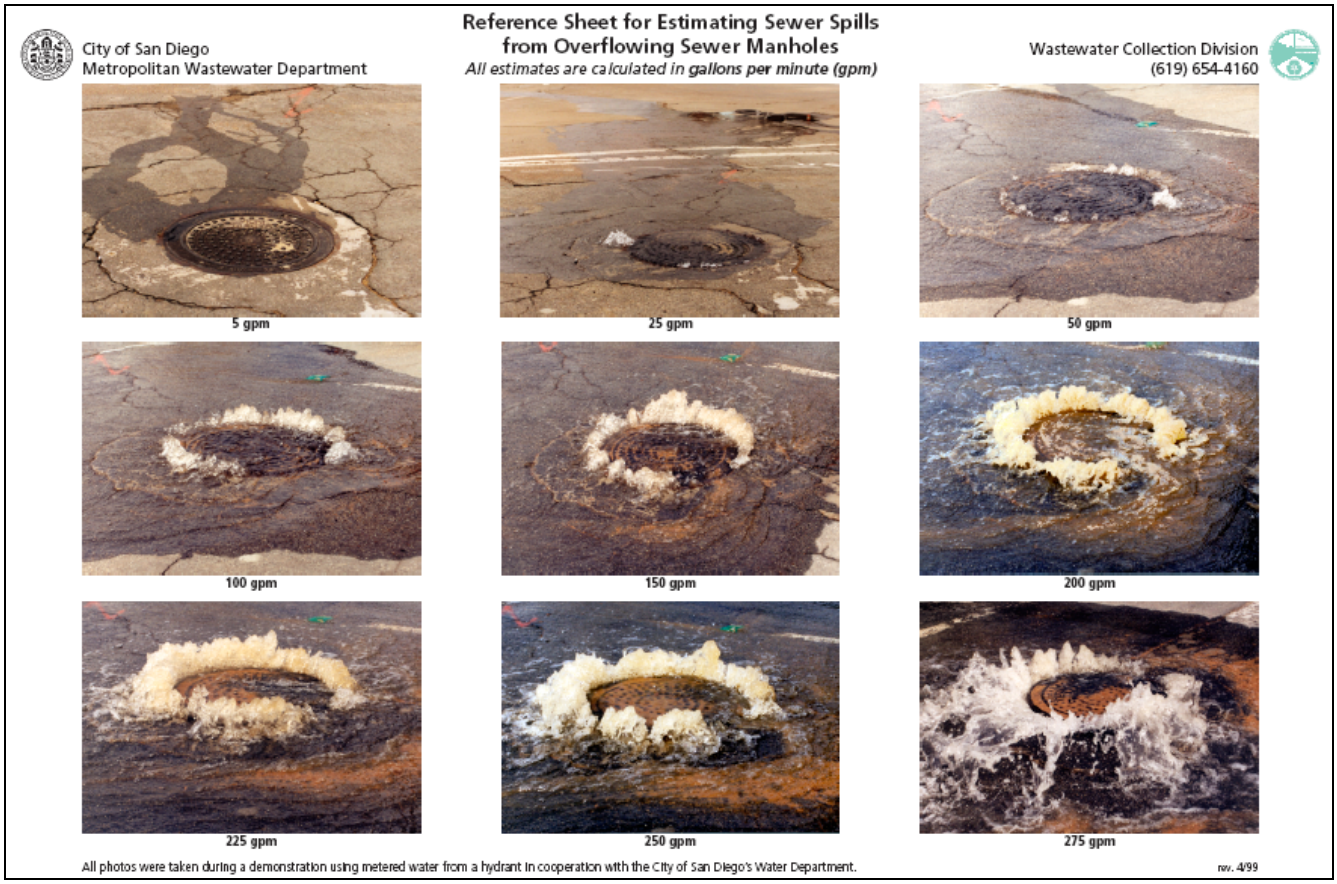

6.7 - Overflow Reporting Plan

The California State Water Resources Control Board (SWRCB) has established guidelines for classifying and reporting SSOs. Reporting and documentation requirements vary based on the type of SSO. There are three categories of SSOs as defined by the SWRCB:

- Category 1 - All discharges of sewage resulting from a failure in the City's sanitary sewer system (mains and lower laterals) that:

A. Equal or exceed 1,000 gallons.
B. Result in a discharge to a drainage channel and/or surface water
C. Discharge to a storm drainpipe that was not fully captured and returned to the sanitary sewer system.

- Category 2 - All other discharges of sewage resulting from a failure in the City's sanitary sewer system (mains and lower laterals).

- Private Lateral Sewage Discharges - Sewage discharges that are caused by blockages or other problems within a privately owned lateral.

6.7.1 - Internal Reporting Procedure

Once Field Crews are done with completing their work orders in the field and documenting the SSO events, they upload their work order to a master database. WEST BAY is not required to report any SSOs occurring from a private lateral pipe, but it always ensures that the main sewer lines are cleaned and also advise such residents to contact their plumber for the cleaning of their Lateral service pipelines. The Home owners are also referred to the Town on how to obtain grants for faulty lateral line repairs.

6.7.2 - External Reporting Procedure

All external reporting is done by the Town. The California Integrated Water Quality System (CIWQS) electronic reporting system is to be used for reporting SSO information to the SWRCB whenever possible.

6.7.2.1 - SSO Category 1 that Reaches Water of the State

If a Category I SSO results in a discharge to **waters of the State** (a drainage channel or surface water), the following reporting requirements apply:

- **Within two hours of notification** of the spill event, the Town's LRO will:
  - Notify the Cal-OES (and obtain control number for use in other reports).
- **Within 3 business days** of the spill event, the Town's LRO will be responsible for submitting the initial/draft SSO report using the CIWQS online database.
- **Within 15 calendar days** of the conclusion of SSO response and remediation, the Town's LRO will be required to submit the Final Certification to CIWQS.

The Town's LRO will also append additional information to the certified report, in the form of an attachment, if needed, at any time.

6.7.2.2 - SSO Category 2

Within 30 calendar days after the end of the calendar month in which the SSO occurs, the Town's LRO will submit an electronic report to SWRCB (using CIWQS).
The Town's LRO will then certify the report.

6.7.2.3 - Private Lateral Sewage Discharges

All sewage discharges that meet the above criteria for private lateral sewage discharges may be reported to the Online SSO Database, based upon the City's discretion. If a private lateral sewage discharge is recorded in the SSO Database, the City must identify the sewage discharge as occurring and caused by a private lateral, and a responsible party (other than the City) should be identified, if known.

6.7.2.4 - No Spill Certification

If there are no SSOs during a given calendar month, the LRO will be required to submit an electronic report that the City did not have any SSOs. The Town's LRO will be required to certify the report **within 30 calendar days after the end of each calendar month**.

6.7.2.5 - CIWQS (is not available)

In the event that the CIWQS system is not available for reporting, the Town's LRO will be required to fax all required information to the RWQCB office, at the RWQCB fax number of (510) 622-2460, in accordance with the time schedules identified above. In such event, the Town will submit the appropriate reports using CIWQS as soon as practical.

6.8 - CIWQS Online Database

The SSO database is used to collect and store an enrollee's (defined as an agency which is covered under the Sanitary Sewer Order) facility and organizational information (collection system questionnaire) and details of all SSOs which occur from an enrollee's sanitary sewer system (SSO reports). All of the information collected in the SSO database is entered by enrollees; state and Regional Water Board staff cannot enter or modify any information in the SSO database.

The SSO database is accessed through the CIWQS website, which is the State Water Board's regulatory and water quality information management system. Enrollees will be assigned a CIWQS account to access the SSO database. The implementation of the SSO database has been phased-in throughout the state on a regional basis as discussed below.

Access to the SSO database allows enrollees to complete the Collection System Questionnaire and submit SSO reports as required by the Sanitary Sewer Order. The Sanitary Sewer Order requires enrollees to complete the collection system questionnaire within 30 calendar days of receiving their CIWQS user ID and password.

6.8.1 - Online Reporting

Once a LRO has received their CIWQS user ID and password, the enrollee can register additional staff for individual access to CIWQS for submitting Agency information to the SSO database. Instructions regarding this registration process are available on the CIWQS Help Center webpage.

These accounts will allow controlled and secure entry into the SSO Database. Additionally, within 30 days of receiving an account, and prior to recording SSOs into the SSO Database, the Town must complete the "Collection System Questionnaire," which collects pertinent information regarding a City's collection system. The "Collection System Questionnaire" must then be updated at least every 12 months.

6.8.2 - Minimal Reportable Data

At a minimum, the following mandatory information must be included prior to finalizing and certifying a SSO report for each category of SSO:

- SSO Category 1
  - All information listed for Category 2 SSOs.
  - Estimated SSO volume that reached (or did not reach) a surface water area or drainage channel.
  - Volume recovered from a storm drain.
  - Estimated SSO amount recovered.
  - Response and corrective action taken.
  - If samples were taken, identify which regulatory agencies received sample results (if applicable). If no samples were taken, the "NA" must be selected.
  - Parameters that samples were analyzed for (if applicable).
  - Identification of whether or not health warnings were posted.
  - Beaches impacted (if applicable); if no beach was impacted, then "NA" must be selected.
  - Whether or not there is an ongoing investigation.
  - Steps taken, or planned, to reduce, eliminate, and prevent re-occurrence of the overflow and a schedule of major milestones for those steps.
  - OES control number (if applicable).
  - Date OES was called (if applicable).
  - Time OES was called (if applicable).
  - Identification of whether or not County Health Officers were called.

    - Date County Health Officer was called (if applicable).
    - Time County Health Officer was called (if applicable).
- SSO Category 2
    - Identify the location of SSO by entering the GPS coordinates.
    - Identify the region, that is, the applicable Regional Water Board area of jurisdiction, in which the SSO occurred.
    - Identify the county where the SSO occurred.
    - Document whether or not the SSO entered a drainage channel and/or impacted a surface water body.
    - Document whether or not the SSO was discharged to a storm drain pipe that was not fully captured and returned to the sanitary sewer system.
    - Estimated the SSO volume in gallons
    - Identify the SSO source (manhole, cleanout, etc.).
    - Identify the SSO cause (mainline blockage, roots, etc.).
    - Document the time of the SSO notification or discovery.
    - Document the estimated operator arrival time.
    - Document the SSO destination.
    - Estimate the SSO end time.
    - Upon SSO certification, the SSO database will issue a final SSO Identification (ID) Number.
- Private Lateral
    - All information listed above (if applicable and known).
    - Identification of sewage discharge as a private lateral sewage discharge.
    - Responsible party contact information (if known).

6.9 - Certification of Final Report

All final reports must be certified by an authorized person, as required by Provision J of the Order. Registration of authorized individuals, who may certify reports, will be done in accordance with the CIWQS' protocols for reporting.

The general work flow for the SSO database, which is utilized by the City to comply with the SSO reporting requirements, uses the process that is discussed in the paragraphs that follow.

The Town must report two types of information into the SSO database: sanitary sewer system/agency characteristics (collection system questionnaire), and spill details (SSO report). The Town's collection system questionnaire was completed before any SSO reports were submitted. Additionally, the collection system questionnaire has been, and will continue to be, updated annually.

All SSOs from the Town's sanitary sewer system must be reported in the SSO database. The deadline for submittal of a SSO report depends on the classification of the spill, i.e. Category 1 (greater threat) or Category 2 (lesser threat). For a Category 1 spill, the enrollee must submit an initial, uncertified

report of the spill as soon as possible but no later than three business days after being made aware of the SSO. The final, certified report for a Category 1 spill must be submitted within 15 calendar days of the conclusion of SSO response activities. For a Category 2 spill, the enrollee must submit a final, certified report (no initial, uncertified report required) within 30 calendar days after the end of the calendar month in which the SSO occurred.

The process of entering information into the SSO database begins with the enrollee specifying the pertinent sanitary sewer system.

The collection system questionnaire is an on-line form which contains questions regarding the relevant characteristics of the City's sanitary sewer system and agency. After initial login, the first major task an enrollee needs to perform is completing the collection system questionnaire. A new collection system questionnaire is accessed through the "Collection System Questionnaire" link on the SSO menu. The collection system questionnaire must be updated at least every 12 months, and this is done through the "Collection System Questionnaire" link on the SSO menu.

Along with completing the collection system questionnaire, an enrollee must also report all SSOs to the database.

To begin a new spill report, the enrollee selects the "Reporting New SSO" link from the SSO menu. Then, the enrollee enters the information requested on the form. A spill report can exist at several different levels of completion: "work in progress", "draft", "ready to certify", and "certified". A "work in progress" SSO report is a preparatory draft of the report with limited required information and is intended only for the enrollee's use. To save a spill report as a "work in progress", the enrollee selects the "Save Work in Progress" button on the "SSO – General Information" screen. An SSO report in "draft" status is a working draft of the report with more required information than "work in progress" status. By submitting a report in "draft" status, the enrollee fulfills the initial, uncertified reporting requirement for a Category 1 spill. The enrollee selects the "Submit Draft" button on the "SSO – General Information" screen to submit a report as a "draft."

Once the spill report contains all the required information, it can be submitted for certification by selecting the "Ready to Certify" button on the "SSO – General Information" screen. A "ready to certify" SSO report that is complete and accurate is certified by the enrollee through first selecting the "Modify Existing SSO" link on the SSO menu. Then, the spill report to be certified must be located by using the "SSO – Search" screen. Next, the "Certify" button on the "SSO – General Information" screen for the specified report is selected. Finally, the report is certified by selecting the "Certify" button on the "SSO – Certifying a SSO Report" screen. The database will then display a confirmation of the report certification.

An enrollee has fulfilled the final, certified reporting requirement for a Category 1 or Category 2 spill by submitting a certified report in the SSO database. A spill report can be submitted directly as “ready to certify” without being submitted as a “work in progress” or “draft,” assuming the enrollee has entered all the necessary information.

When submitting a spill report, the enrollee can add supporting documentation such as pictures and reports by using the “Attachments” tab on the “SSO – General Information” screen. Additionally, the enrollee can include details about related parties (e.g., fire or police department responders) by selecting the “Spill Related Parties” tab on the “SSO – General Information” screen.

A “certified” SSO report can be modified by an enrollee to correct or add information, if necessary. To do this, an enrollee begins by locating the “certified” spill report through the “SSO – Search” screen after selecting the “Modify Existing SSO” link on the SSO menu. The “Amend” button on the “SSO – General Information” screen for the designated “certified” SSO report is then selected. The spill report is returned to “Submit Draft” status and can be modified. Finally, the spill report needs to be recertified after the necessary modifications have been completed.

If a sanitary sewer system doesn’t have any SSOs for an entire calendar month, a “no spill certification” must be submitted (using the “Generate No Spill Certification” link from the SSO menu) by the enrollee. A “no spill certification” must be submitted within 30 calendar days after the end of each calendar month in which no spills occur. The database will display a confirmation of the “no spill certification” when completed.

The SSO database automatically sends email notifications to interested parties when spill reports are generated. When a SSO report is submitted in “draft” form (“Submit Draft” button selected) for the first time, an email notification is sent to the enrollee, responsible Regional Water Quality Control Board, and County Health Official (if known) – this is a courtesy and not required by the Sanitary Sewer Order. A report submitted as ready for certification (“Ready to Certify” button) or certified (“Certify” button) results in email notifications being sent to the enrollee, responsible Regional Water Quality Control Board, and County Health Official (if known) – this is a courtesy and not required by the Sanitary Sewer Order. However if a SSO report is saved as a “work in progress” (“Save Work in Progress” button), no e-mail notifications are generated because the report is preliminary and only intended to be viewed by the enrollee.

As for database use by an enrollee, there are two levels of access available to staff entering the information: LROs and data submitters. LROs have full access to enter information and certify spill reports. Data submitters, on the other hand, only have authority to enter information and cannot certify SSO reports, including a “No Spill Certification”. An enrollee can have multiple LROs and data

submitters to enter the necessary information into the SSO database for their sanitary sewer system.

6.9.1 - Record Keeping

Individual SSO records shall be maintained by the City for a minimum of five years from the date of the SSO. This period may be extended when requested by a Regional Water Board Executive Officer. All records shall be made available for review upon State or Regional Water Board staff's request. All monitoring instruments and devices that are used by the City to fulfill the prescribed monitoring and reporting program shall be properly maintained and calibrated as necessary to ensure their continued accuracy. The City shall retain records of all SSOs, such as, but not limited to and when applicable:

- Record of Certified report, as submitted to the online SSO database.
- All original recordings for continuous monitoring instrumentation.
- Service call records and complaint logs of calls received by the City.
- SSO calls
- SSO records
- Steps that have been, and will be, taken to prevent the SSO from recurring and a schedule to implement those steps.
- Work orders, work completed, and any other maintenance records from the previous five years which are associated with responses and investigations of System problems related to SSOs.
- A list and description of complaints from customers or others from the previous five years.
- Documentation of performance and implementation measures for the previous five years.

If water quality samples are required by an environmental or health regulatory agency or State law, or if voluntary monitoring is conducted by the City or its agent(s), as a result of any SSO, records of monitoring information shall include:

- The date, exact place, and time of sampling or measurements.
- The individual(s) who performed the sampling or measurements.
- The date(s) analyses were performed.
- The individual(s) who performed the analyses.
- The analytical technique or method used.
- The results of such analyses

Appendix E – Document 3
Standard Operating Procedures for Purissima Pump Station

LOS ALTOS HILLS
CALIFORNIA

TOWN OF LOS ALTOS HILLS

STANDARD OPERATION PROCEDURES

FOR

PURISSIMA PUMP STATION

26379 Fremont Road
Los Altos Hills
California 94022
650 / 941-7222
Fax: 650/941-3160
650 / 941-7222

PURISSIMA SANITARY PUMP STATION

The Purissima Sanitary Pump Station is located within the Town of Los Altos Hills (Town) at the southwest corner Purissima Road and Elena Road and was constructed in 2001. The pump station currently services approximately 20 residential parcels, Purissmia Park, and Fremont Hills Country Club and Stables. There are approximately 40 other future users that can potentially connect to the pump station collection system. Pump station consists of four FLYGT Pump *Model C-3512*, standby engine generator and motor control center with Microtel *Series 1000* Dialer – remote alarm monitoring system. Refer to the attached layout schematic, section and specifications. Flow from the station is pumped into a 1,800-foot long, 4-inch diameter HDPE force main pipe that discharges into manhole E634 on La Cresta Drive.

Following maintenance services shall be performed as outlined below to ensure optimum performance of the various equipment including the pumps and generator:

Services to be performed each week

(1) Visually inspect and check the wet well levels to ensure proper automatic start/stop levels for the pumps
(2) Check pumps for unusual noise or vibrations
(3) Inspect dry pit pumps and motors for leaks, unusual noise or vibrations
(4) Record hour meter readings for each pump bank
(5) Clean and maintain the pumping plant area
(6) Inspect the motor control center to ensure proper operations

Services to be performed every two weeks

(1) Exercise generator, simulating power failure to insure automatic startup
(2) Record generator hour meter reading
(3) Check generator batteries, fuel, oil and coolant levels

Services to be performed every 2 months

(1) Conduct amperage test on each pump bank
(2) Perform meg test on each pump motor to detect moisture in windings

Services to be performed every year

(1) Perform yearly maintenance and inspection of the sewer pumps per current ITT FLYGT recommended inspection checklist (see attached).

Services to be performed as needed

(1) Vacuum wet well on an as needed basis.

Following procedures shall be followed in an event of pump and power failures:

In the event of multiple pump failure:

(1) Respond with a Vac-Con truck or approved equal.
(2) Contain overflow and direct flow away from the creek.
(3) Use the Vac-Con and empty the wet well.
(4) Retrieve all overflow and return to the system.
(5) Estimate required pump down intervals or pump down at high-level alarm.
(6) Notify Public Works Department (650/947-7222), Maintenance Superintendent (650/823-4547) and Town Sanitary sewer maintenance and operations contractor (510/332-2314).

In the event the Vac-Con is unavailable, by pass pumping is required:

(1) Contain overflow and direct flow away from the creek.
(2) Call for two trash pumps and all 3" lay flat hose to be delivered to the station, additional personnel will be required to expedite set up.
(3) Place both pumps at the wet well.
(4) Connect draft hose to the suction side of each pump.
(5) Connect 3" lay flat hose to the outlet side of each pump and lay it to the downstream.
(6) Prime and start each pump.
(7) Monitor and start each pump.
(8) Estimate required pump down intervals or pump down at high-level alarm.
(9) Secure pumps on site. Leave in place until malfunction is corrected.
(10) Notify Public Works Department (650/947-7222), Maintenance Superintendent (650/823-4547) and Town Sanitary sewer maintenance and operations contractor (510/332-2314).

In the event of a power failure:

(1) Respond with a Vac-Con truck or approved equal.
(2) Contain overflow and direct flow away from the creek.
(3) Use the Vac-Con and empty the wet well.
(4) Retrieve all overflow and return to the system.
(5) Keep the Vac-Con on site until the generator is back up.
(6) Set up the generator.
(7) Monitor generator and refuel periodically.
(8) Notify Public Works Department (650/947-7222), Maintenance Superintendent (650/823-4547) and Town Sanitary sewer maintenance and operations contractor (510/332-2314).

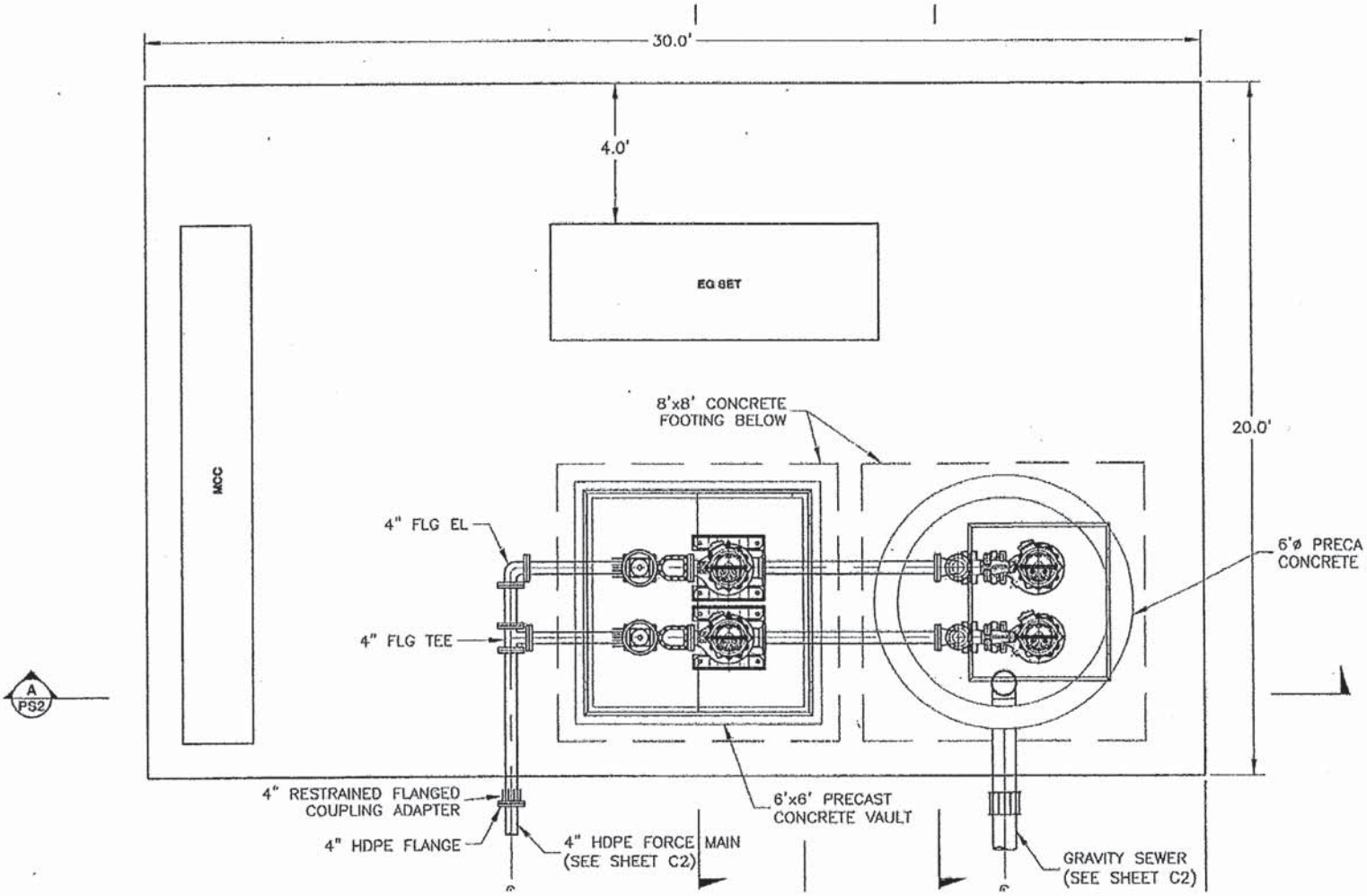
30.0'
4.0'
20.0'
EQ SET
MCC
8'x8' CONCRETE
FOOTING BELOW
4" FLG EL
4" FLG TEE
6'ø PRECA
CONCRETE
A
PS2
4" RESTRAINED FLANGED
COUPLING ADAPTER
4" HDPE FLANGE
4" HDPE FORCE MAIN
(SEE SHEET C2)
6'x6' PRECAST
CONCRETE VAULT
GRAVITY SEWER
(SEE SHEET C2)

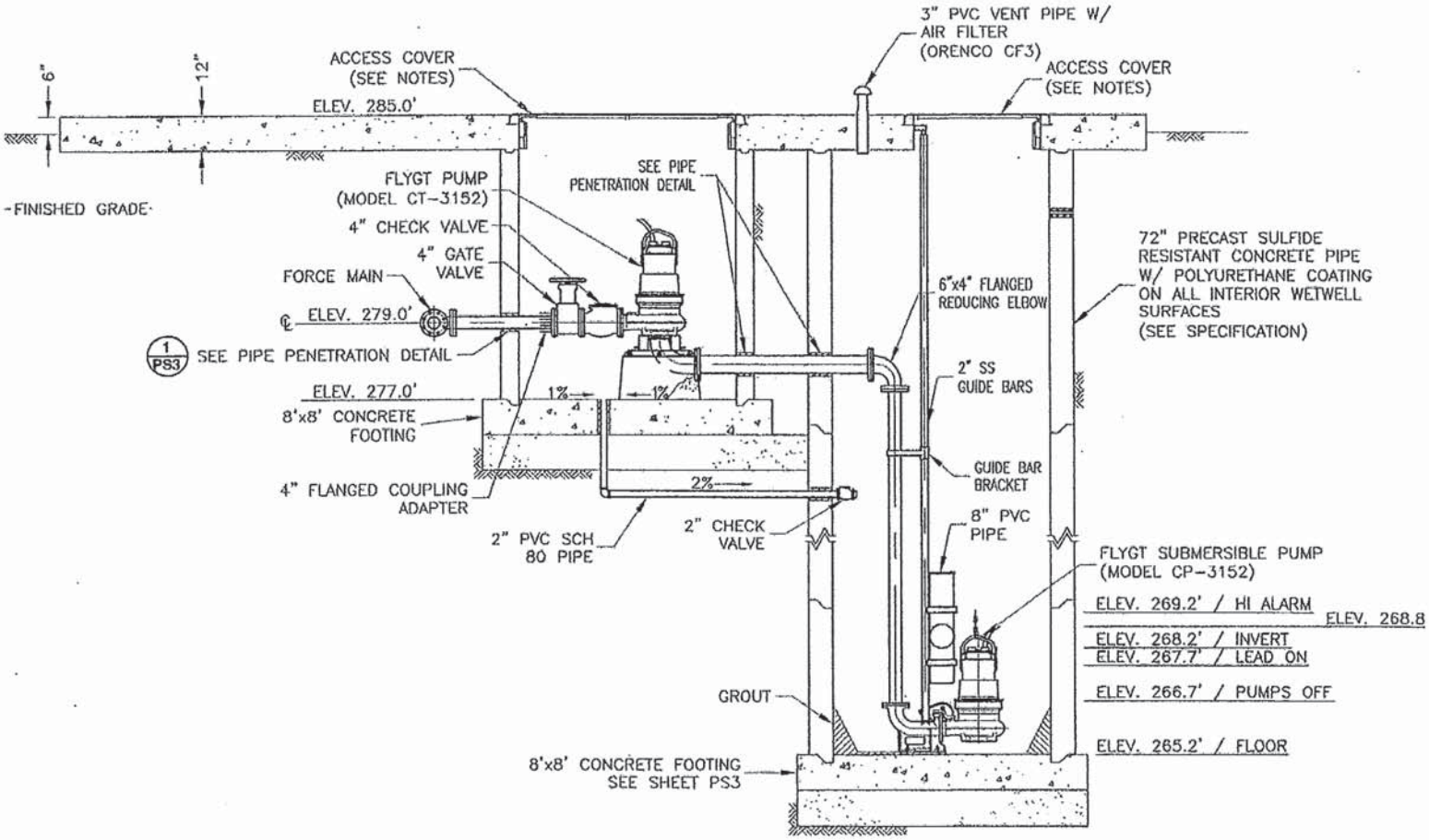
3" PVC VENT PIPE W/
AIR FILTER
(ORENCO CF3)
ACCESS COVER
(SEE NOTES)
ACCESS COVER
(SEE NOTES)
6"
12"
ELEV. 285.0'
-FINISHED GRADE-
SEE PIPE
PENETRATION DETAIL
FLYGT PUMP
(MODEL CT-3152)
4" CHECK VALVE
4" GATE
VALVE
FORCE MAIN
ELEV. 279.0'
1
PS3
SEE PIPE PENETRATION DETAIL
ELEV. 277.0'
1%
1%
8'x8' CONCRETE
FOOTING
4" FLANGED COUPLING
ADAPTER
2%
2" PVC SCH
80 PIPE
2" CHECK
VALVE
6"x4" FLANGED
REDUCING ELBOW
2" SS
GUIDE BARS
GUIDE BAR
BRACKET
8" PVC
PIPE
72" PRECAST SULFIDE
RESISTANT CONCRETE PIPE
W/ POLYURETHANE COATING
ON ALL INTERIOR WETWELL
SURFACES
(SEE SPECIFICATION)
FLYGT SUBMERSIBLE PUMP
(MODEL CP-3152)
ELEV. 269.2' / HI ALARM
ELEV. 268.8
ELEV. 268.2' / INVERT
ELEV. 267.7' / LEAD ON
ELEV. 266.7' / PUMPS OFF
ELEV. 265.2' / FLOOR
GROUT
8'x8' CONCRETE FOOTING
SEE SHEET PS3

Attachment 2

ITT Industries

ITT Flygt Corporation
790-A Chadbourne Road
Fairfield, CA 94534
Tel: (707) 422-9894
Fax. (707) 422-9808

SCHEDULED PUMP PREVENTATIVE MAINTENANCE INSPECTION AGREEMENT
FLYGT CORPORATION

SERVICE - 21 POINT CHECK LIST

- ☐ Check electrical condition of insulation on power cable and on all phases of motor. (In Meg Ohms)
- ☐ Check for any loose or faulty electrical connections within the pump control panel.
- ☐ Measure resistance between stator windings. (In Ohms)
- ☐ Check voltage supply between all phases of the electrical control panel. (VAC)
- ☐ Check voltage balance between all phases on the load side* of the pump control with pump on. (VAC)
- ☐ Check amperage draws on all phases of the pump motor. (In Amps)
- ☐ Check condition and operation of motor thermal protectors control system (if so equipped).
- ☐ Removal of Flygt pump from lift station for physical inspection.
- ☐ Check condition of upper shaft seals (inspect condition of motor housing).
- ☐ Check condition and operation of leakage detector (if so equipped).
- ☐ Check lower shaft seals (inspect condition of oil).
- ☐ Change oil if needed (cost of oil included).
- ☐ Check for worn or loose impeller.
- ☐ Check all impeller wear rings. (Note: Wear rings are not covered by warranty and must be purchased by customer if in need of replacement)
- ☐ Check for noise upper and lower bearings.
- ☐ Check physically for damage of pump and power cable.
- ☐ Clean, reset, and check operation of level sensors.
- ☐ Check for correct shaft rotation.
- ☐ Reinstall Flygt pump and check for leakage at the discharge connection.
- ☐ Test of pump operation cycle (if level of liquid in station permits).
- ☐ Check operating of valves and pipes in station.

FLYGT

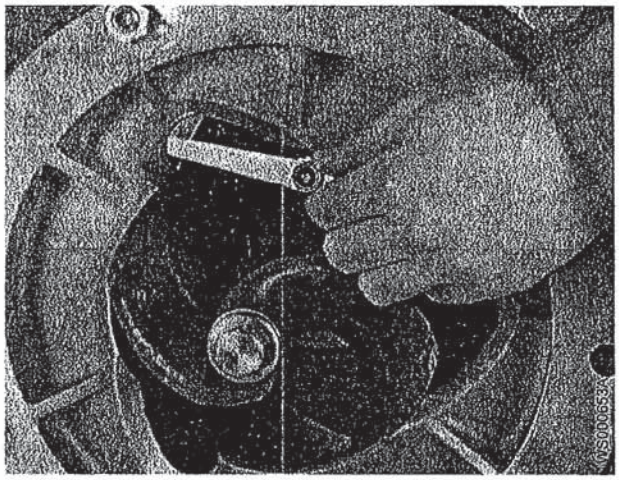

b) Measure the distance between the edge of the impeller and the pump housing cover.

Tightening torque: 57 Nm (42 ft-lbs).

Check that the impeller can rotate freely.

More extensive repairs require special tools and should be completed by an Xylem authorized service technician.

Service the pump

Type of service	Purpose	Inspection interval
Initial inspection	To make a check up of the pump condition by an authorized Xylem service representative and, based on the result and findings from these measures, to determine the intervals for periodical inspection and major overhaul for the specific installation.	Within the first year of operation.
Periodical inspection	To prevent operational interruptions and machine breakdown. Measures to secure performance and pump efficiency are defined and decided for each individual application. It can include such things as impeller trimming, wear part control and replacement, control of zinc-anodes and control of the stator.	Up to 12,000 hours or 3 year, whichever comes first. Applies to normal applications and operating conditions at media (liquid) temperatures <40°C.
Major overhaul	To secure a long operating lifetime for the product. It includes replacement of key components and the measures taken during an inspection.	Up to 24,000 hours or 6 years, whichever comes first. Applies to normal applications and operating conditions at media (liquid) temperatures <40°C.

NOTICE:

Shorter intervals may be required when the operating conditions are extreme, for example with very abrasive or corrosive applications or when the liquid temperatures exceed 40°C (104°F).

Inspection

Service item	Action
Cable	1. If the outer jacket is damaged, replace the cable. 2. Check that the cables do not have any sharp bends and are not pinched.
Connection to power	Check that the connections are properly tightened.
Electrical cabinets	Check that they are clean and dry.
Impeller	1. Check the impeller clearance. 2. Adjust the impeller, if necessary.
Stator housing	1. Drain all liquid, if any. 2. Check the resistance of the leakage sensor. Normal value approx.1500 ohms, alarm approx. 430 ohms.
Insulation	Use a megger maximum 1000 V. 1. Check that the resistance between the earth (ground) and phase lead is more than 5 megohms. 2. Conduct a phase-to-phase resistance check.
Junction box	Check that it is clean and dry.
Level regulators	Check the condition and functionality.
Lifting device	Check that local safety regulations are followed.
Lifting handle	1. Check the screws. 2. Check the condition of the lifting handle. 3. Replace if necessary.
O-rings	1. Replace the oil plug O-rings. 2. Replace the O-rings at the entrance or junction cover. 3. Grease the new O-rings.
Overload protection and other protections	Check the correct settings.
Personnel safety devices	Check the guard rails, covers, and other protections.
Rotation direction	Check the impeller rotation.
Oil housing[2]	Fill with new oil, if necessary.
Terminal board	Check that the connections are properly tightened.
Thermal contacts	Normally closed circuit; interval 0–1 ohm.
Thermistor	Check the resistance is between 20–250 ohms and the measured voltage is maximum 2 V DC.
Voltage and amperage	Check the running values.

[2] Regardless of individual applications, the stator housing and the oil housing should not be inspected less frequently than the intervals for normal applications and operating conditions at media (liquid) temperatures <40°C.

Town of Los Altos Hills Sanitary Sewer Management Plan E.3-8

Major overhaul

For a major overhaul, take this action in addition to the tasks listed under Inspection.

Service item	Action
Support and main bearing	Replace the bearings with new bearings.
Mechanical seal	Replace with new seal units.

Service in case of alarm

Alarm source	Action
The thermistor/Thermal contact	Check that the cooling jacket is not clogged. Clean if necessary.
The overload protection	Check that the impeller can rotate freely.

APPENDICES

APPENDIX A: Technical Specifications

A.1 Communications

Phone Interface:	FCC 68 Registration Number: **1QEUSA-21532-AL-E** Pass-through Phone Handset Cellular Phone Connection or equivalent.
Ringer Equivalence Number:	1.2B(ac)
LED Indicators:	Dialer Off-hook/Ring Detect/Call Progress Telephone Off-hook/FAX-in-progress System Status/Power-fail
Dialing Capacity:	9 Phone Numbers, 60 Digits Each Tone or Pulse Dial Special Sequences for Selection of Pulse/Tone, Pause, Call Progress Detection, Turning ON/OFF Output Modules, Auto Acknowledging Alarms, Communicating with FAX machines or Computers.
Call Progress Detection	Dial Tone Detect Busy Detect Ring Back Detection Quiet/Voice/Answer/Pager Terminal Tone detect
Answer Delay:	1-99 Rings (Call Back Acknowledge)
Fax:	Group 3 Fax Compatible Single-page Alarm Status or Dialer Configuration Reports

A.2 Electrical

Input Power:	Plug in Wall Power Supply, 120 VAC to 14.5 VDC UL/CSA approved. or 12-16VDC @ 0.5 Amp (Dialer only) or 14.5-16VDC (Dialer with Battery) Solar Power Interface Compatible Power On/Off Switch Power-fail Indicator Externally Accessible Fuse Optional: Micromax Surge Suppresor
Battery Operational:	12 Volt 2.2 AH Lead Acid Battery Option

	(6 hour backup time typical)
Battery Internal:	3 Volt Lithium for Speech Storage/Real Time Clock

A.3 Printing

Interface:	Serial RS-232, 2400 Baud, 8 Data, No Parity, 1 Stop Hardware Handshaking
Printer Modes:	Continuous Event Log with Time and Date Stamp Configuration Report Snapshot Status Report

A.4 Environmental

Temperature:	20°F to 130°F operating 0°F to 130°F storage
Humidity:	0-95% RH, Noncondensing
Surge:	2500 V Per ANSI
EMI/RFI:	Per FCC Part 15c

A.5 Enclosure

Options:	Panel Mount Chassis (7.7" wide 8.8" high x 4" deep) Suitable for Wall or Panel Mounting Battery Mounted Separately Nema 4 Fiberglass Case with Hard Cover (12" Wide, 15.5" High, 6.6" Deep) Nema 12 Fiberglass Case with Hard Cover Nema 12 Fiberglass Case with Clear Cover (9" Wide, 10.5"High, 6.5" Deep)
Weight:	Panel Mount Unit 4 lbs Nema 12 case: 6 lbs Battery and holder: 3 lbs Full system: 13 lbs

A.6 Speech

Type:	Digitized Resident and User-Recorded Messages ADPCM
Recordable Message Lengths:	6 Seconds System Message 3.25 Seconds Each I/O Name

A.7 I/O Modules

Capacity:	8 I/O Socket Locations for Plug-in Modules

I/O Module Types:

Tin No.	Description
61558	Digital Input, Isolated, Dry Powered
61567	Switch Module
61556	Digital Output Contact, Dry, N.O.
61557	Digital Output Contact, Dry, N.C.
61549	Analog Input, 4-20 mA, Isolated
61550	Analog Output, 4-20 mA, Isolated
61545	Digital Input, 120 VAC
61546	Digital Input, 3 to 32 VDC
61547	Digital Output, 60 VDC
61548	Digital Ouput, 120 VAC Output
61551	Analog Input, 1 to 5 VDC
61552	Analog Output, 1 to 5 VDC
61553	Digital Input, 5 to 60 VDC
61554	Digital Input, 5 to 200 VDC

A.8 I/O Functional Modes

Discrete Status:	ON/OFF or OPEN/CLOSED
Discrete Alarm Inputs:	ALARM/NORMAL/STATUS
Analog Status Inputs:	0.0 to 99.9%
Analog Alarm Inputs:	High and Low Set Points
Analog Outputs:	0.0 to 99.9%
Accumulator:	32-Bit Accumulator, 50 pps. Channel 8
Low Speed Counter Inputs:	0.5 pps. Channels 1-7, (2 sec/pulse)
Run Time Inputs:	00:00:00 (DD:HH:MM)
Local Alarm Output:	Alarm/Normal
Power Fail Detection:	Power Fail/Normal

A.9 Series 1000 Outline and Mounting Diagram

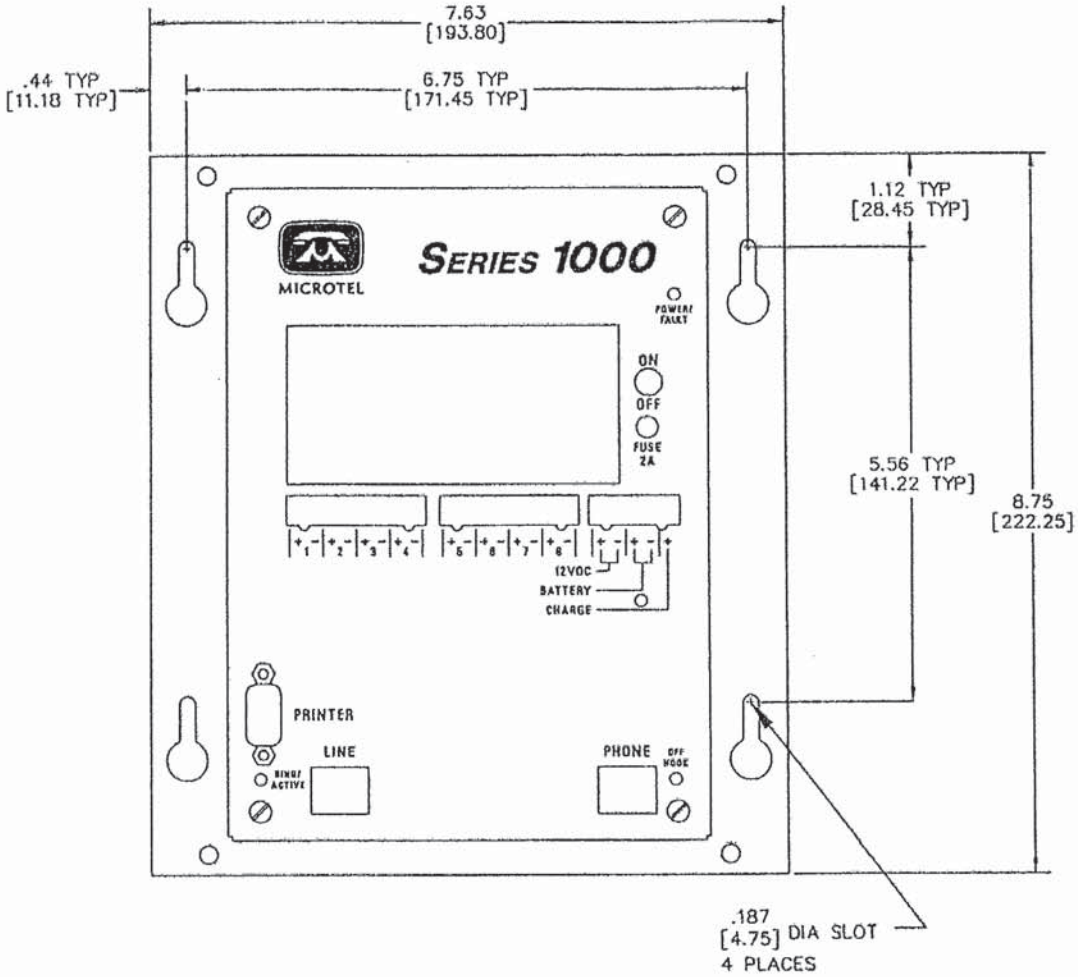

Appendix E – Document 4
Standard Operating Procedures for O'Keefe Pump Station

TOWN OF LOS ALTOS HILLS

STANDARD OPERATION PROCEDURES

FOR

O'KEEFE SEWER PUMP STATION

FAILURE

26379 Fremont Road
Los Altos Hills
California 94022
650 / 941-7222
Fax: 650/941-3160
650 / 941-7222

O'KEEFE LANE PUMP STATION

The O'Keefe pump station is located within the Town of Los Altos Hills limits on O'Keefe Lane, west of South El Monte Avenue and was constructed in the 1993. City records indicate that the pump station currently serves 42 properties in the Town and 7 properties within the City. It is a submersible pump station with a manhole serving as the wet well. Flow from the station is pumped into a 185-foot long, 4-inch diameter ductile iron force main that discharges into manhole H2S-408.

In the event of multiple pump failure:

1. Respond with Vac-Con (VE 61-19).
2. Contain overflow and direct flow away from the creek.
3. Using the Vac-Con empty the wet well (H21-101).
4. Retrieve all overflow and return to the system.
5. Estimate required pump down intervals or pump down at high-level alarm.
6. Notify Sewer Supervisor (650/947-2878), Public Works Superintendent (408/306-3107), Oak Alarm (1-800/341-9292) and Los Altos Police Department (650/947-2770) of the stations status.

In the event the Vac-Con is unavailable, bypass pumping is required:

1. Contain overflow and direct flow away from the creek.
2. Call for two trash pumps and all 3" lay flat hose to be delivered to the station, additional personnel will be required to expedite set up.
3. Place both pumps at the wet well (H21-101).
4. Connect draft hose to the suction side of each pump.
5. Connect 3" lay flat hose to the outlet side of each pump and lay it to the downstream MHH2S-408.
6. Prime and start each pump.
7. Monitor pumps and sewage level.
8. Estimate required pump down intervals or pump down at high-level alarm.
9. Secure pumps on site. Leave in place until malfunction is corrected.
10. Notify Sewer Supervisor (650/947-2878), Public Works Superintendent (408/306-3107), Oak Alarm (1-800/341-9292) and Los Altos Police Department (650/947-2770) of the stations status.

In the event of a power failure:

1. Respond with the Vac-Con (VE61-19).
2. Contain overflow and direct flow away from the creek.
3. Using the Vac-Con and empty the wet well (H2l-101).
4. Retrieve all overflow and return to the system.
5. Keep the Vac-Con on site until the generator is set up.
6. Set up the generator (see instructions).
7. Monitor generator
8. Refuel periodically.
9. Notify Sewer Supervisor (650/947-2878), Public Works Superintendent (408/306-3107), Oak Alarm (1-800/341-9292) and Los Altos Police Department (650/947-2770) of the stations status.

Instructions for connecting emergency generator in the event of a power outage at O'Keefe Lift Station:

1. Call Oak Alarm (1-800/341-9292) to inform them of the status and to let them know you are hooking up the emergency generator.
2. Hook up the power cord from the emergency generator (EQ61-01) to the adaptor on the side of the lift station electrical panel.
3. Turn off the main circuit breaker at the lift station.
4. Turn on the emergency circuit breaker at the lift station.
5. Start the emergency generator.
6. Turn on the circuit breaker at the emergency generator.

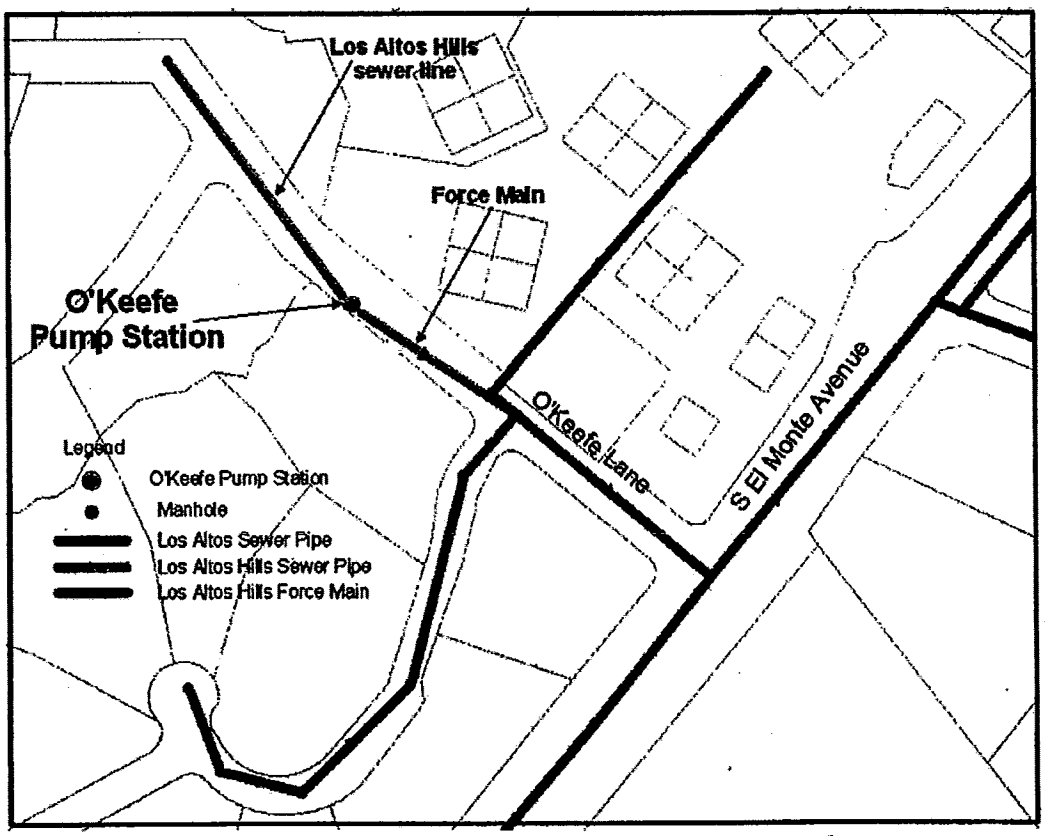

Figure 2-5. O'Keefe Pump Station Schematic

Appendix E – Document 5
Water Quality Monitoring Plan

TOWN OF LOS ALTOS HILLS
WATER QUALITY MONITORING PROGRAM

INTRODUCTION

This Water Quality Monitoring Program provides the Town's response activities and standard operating procedures to be utilized in the OERP, in the event a sanitary sewer overflow (SSO) exceeds 50,000 gallons. This program is reviewed periodically and may be updated as necessary.

State Water Resources Control Board Order No. WQ 2013-0058-EXEC, **Amending Monitoring And Reporting Program For Statewide General Waste Discharge Requirements For Sanitary Sewer Systems** (Effective September 9, 2013), requires the following:

SSO WDR Section D. Water Quality Monitoring Requirements

To comply with subsection D.7(v) of the SSS WDRs, the enrollee shall develop and implement an SSO Water Quality Monitoring Program to assess impacts from SSOs to surface waters in which 50,000 gallons or greater are spilled to surface waters. The SSO Water Quality Monitoring Program, shall, at a minimum:

1. Contain protocols for water quality monitoring.
2. Account for spill travel time in the surface water and scenarios where monitoring may not be possible (e.g. safety, access restrictions, etc.).
3. Require water quality analyses for ammonia and bacterial indicators to be performed by an accredited or certified laboratory.
4. Require monitoring instruments and devices used to implement the SSO Water Quality Monitoring Program to be properly maintained and calibrated, including any records to document maintenance and calibration, as necessary, to ensure their continued accuracy.
5. Within 48 hours of the enrollee becoming aware of the SSO, require water quality sampling for, at a minimum, the following constituents:
   i. Ammonia
   ii. Appropriate Bacterial indicator(s) per the applicable Basin Plan water quality objective or Regional Board direction which may include total and fecal coliform, enterococcus, and e-coli.

Additionally, for spills greater than 50,000 gallons, an SSO Technical Report is required and must be submitted within 45 calendar days from the SSO end date. The SSO Technical Report requirements are described in Element 6 of the OERP.

SAFETY

Be aware of safety issues and do not subject personnel to unsafe conditions in order to comply with this Water Quality Monitoring Plan. Scenarios where monitoring may not be possible may include, but are not limited to, heavy rain/storm events where access points have been compromised, flooding around low level areas, or fast-moving water. Employ the buddy system as required to maximize employee safety when sample collection is required.

ESTIMATION OF SPILL TRAVEL TIME

The follow methods are recommended to estimate spill travel time and direction:

- Method-1; use a velocity probe if available to determine the rate of flow in the surface water or
- Method-2; take visual ft/sec measurement from above, based on floating debris, to estimate the number of feet the debris has traveled in seconds.

Either method will provide a means to estimate the distance traveled and identify where the SSO may be headed within the waterway.

WATER QUALITY SAMPLING PROCEDURES

- In the event an SSO reaches a surface water or (flowing) drainage channel tributary, take samples for spills less than 50,000 gallons as appropriate and within 48 hours for spills greater than 50,000 gallons. The purpose of water quality sampling is to determine the nature and extent of the impact of the SSO.
- When sampling an SSO, take a minimum of three separate sample sets as conditions allow. Water quality sampling should not be given precedence over stopping the spill or protection of public health. One sample shall be located 500’ upstream of the discharge location. The second sample shall be taken at the discharge location. A third sample shall be taken 1000’ downstream of the discharge location. Distances may be adjusted by the local health authority.
- Sample for Total and Fecal Coliform, eColi, and Ammonia as a minimum. Conduct additional sampling for BOD and pH if practical.
- Additional follow-up samples are recommended to confirm the extent that the impact reverts back to baseline levels. Follow-up samples may be used to determine if posting of warning signs should be discontinued (if signs were posted).
- Collaboration with the County Health Department should continue until closure is obtained.
- Do not forget to take into account Spill Travel Time.

WATER QUALITY SAMPLING EQUIPMENT

The following list describes equipment that should be stocked and readily available for each water quality sampling event.

- Personnel protective equipment including latex/nitrile gloves and eye protection
- 3 – 100 mL sterile plastic containers for coliform analysis.
- 3 – 1 Liter Poly containers for BOD.
- 3 – 500 mL Poly containers preserved with H2SO4 for Ammonia analysis.
- 3 – sterile funnels
- 1 – Sample Collection Container
- Cooler with ice packs
- Chain of Custody forms

Ensure that there are adequate quantities of sample containers-kits if there are more than three sample locations.

WATER QUALITY SAMPLING PROCEDURE

1. Put on all required protective equipment including latex/nitrile gloves and eye protection
2. Use the 100 mL sterile container for coliform, 1-liter poly container for BOD and 500mL poly container for ammonia. Ammonia sample requires preservation with H_2SO_4.
3. Collect three sets of samples for each incident:
   a. 500 feet upstream
   b. At the SSO entry point
   c. 1000 feet downstream
4. Collect all grab samples approximately 3’ - 6” below the surface (or if shallower, as close as possible to this depth) to avoid sampling debris or scum from the surface.
5. Collect the sample in a safe manner in the middle of the flow, against the direction of water flow.
6. Rinse the sample collection container.
7. Collect sample in sample collection container and photo-document the locations.
8. Transfer sample from sample collection container to individual sample bottle(s).
9. Leave approximately one inch of head space in individual sample bottles. Do not overfill.
10. Once the lid is opened for the individual sample bottle, do not touch the inside surface of the bottle or lid.
11. For the sample bottles that contain a preservative, take care to keep the preservation material in the container.
12. Immediately place all sample bottles on ice.
13. Complete Chain of Custody form and take samples to contracted environmental laboratory as described in the OERP.

Following are allowable hold times for the sample bottles:

- Ammonia - 28 days (preserved and cooled)
- Bacterial Indicator (enterococcus or fecal/total coliform) - 8 hours (preserved and cooled)
- Biochemical Oxygen Demand - 48 hours (cooled)
- pH Field Test - Immediate

Appendix E – Document 6
BACWA Flyer for Plumber and Building Contractor Outreach

Plumbers & Sewer Contractors: Your Actions Can Prevent Sanitary Sewer Overflows!

What are Sanitary Sewer Overflows or SSOs?

SSOs discharge untreated or partially treated human and industrial waste, debris and disease-causing organisms from the sanitary sewer onto the ground near and into homes and potentially into creeks, rivers, lakes or streams.

What are the impacts of SSOs?

SSOs may result in property damage, environmental damage and/or potential liability to you or your company. Allowing sewage to discharge to a gutter, storm drain or waterway may subject you to penalties and/or out-of-pocket costs to reimburse cities or public agencies for clean-up efforts and regulatory penalties.

How can you prevent SSOs? and avoid associated penalties & fines

When clearing plugged sewer laterals:

- ☑ Whenever possible, remove root balls, grease blockages and any other debris; don't push debris from the lateral to the sewer main.
- ☑ If you can't prevent a root ball or other debris from entering the sewer main when working in our service area, **please call us** at (650) 941-7222, so we can work with you (free of charge) to remove the root ball from the sewer main to prevent blockages further downstream.
- ☑ Use plenty of water to flush lines.
- ☑ Don't open manholes. Hazardous sewer gases from manholes are odorless, undetectable and can be deadly. Call us to open manholes for you and please note that discharge into a publicly-owned manhole requires a permit/approval. Contact our Public Works Department at (650) 941-7222, for information.

When constructing sewer laterals:

- ☑ Check your work area. Gravel, backfill material and test plugs can become lodged in the sewer line and cause blockages. Make sure no debris is left in the sewer line before you backfill.
- ☑ Avoid offset joints – offset joints make sewer lines vulnerable to root intrusion & grease accumulation, cause debris hang-ups and make lines harder to clean. Properly bed your joints and don't hammer tap.
- ☑ Obtain approval prior to construction. Contact Public Works Department at (650) 941-7222 for the appropriate construction specs.

Who Do I Call to Avoid an SSO?

Help us help you…

If you require our free assistance to help clear root balls, grease blockages and other debris from a main sewer line to prevent an SSO or to open a manhole in our service area, please call us at:

(650) 941-7222

Appendix E – Document 7
SSO Technical Report template

TOWN OF LOS ALTOS HILLS

John Harpootlian, Town Mayor
Gary Waldeck, Town Vice Mayor
26379 Fremont Road, Los Altos Hills, California 94022
Telephone: 650-941-7222 ☼ WWW.LOSALTOSHILLS.CA.GOV

Date

State Water Resources Control Board
1001 I Street
Sacramento, CA 95814

Subject: Technical Report for Sanitary Sewer Overflow Greater than 50,000 Gallons
Event ID: XXXXXX

This submittal comprises the Sanitary Sewer Overflow ("SSO") Technical Report ("Report") that is required by State Water Resources Control Board ("SWRCB") Order No.WQ 2013-0058-EXEC ("Order"). The Order requires each enrollee to submit an SSO Technical Report in the California Integrated Water Quality System ("CIWQS") online SSO database within 45 calendar days of the SSO end date for any SSO in which 50,000 gallons or greater are spilled to surface waters.

This Report comprises the following sections:

1. Causes and Circumstances of the SSO
2. Town's Response to SSO
3. Water Quality Monitoring

1.0 CAUSES AND CIRCUMSTANCES OF THE SSO

A. Description of how and when the SSO was discovered.

B. Figure 1 shows the SSO failure point, appearance point(s), and final destination(s).

C. Methodology and data used to calculate the volume of the SSO and any SSO volume recovered.

D. Detailed description of the cause(s) of the SSO.

E. Copies of original field crew records used to document the SSO are included at the end of this Report.

F. The Order requests historical maintenance records for the failure location. The associated pipe segment cleaning and CCTV history is provided in Table 1.

Table 1. Maintenance Results for Pipe Segment XXXXX-XXXX

Date	Action: Clean or CCTV	Summary of Findings

2.0 TOWN RESPONSE TO SSO

A. The following presents a chronology of all actions taken to terminate the SSO.

B. The actions described in 2A, above, followed the Town's Sewer System Management Plan ("SSMP") Overflow Emergency Response Plan. Specifically, the activities related to initial response, reporting, notifications and posting, and corrective measures were followed. The Town is currently in the process of updating its SSMP to include the Water Quality Monitoring Plan requirements from the Order. The Town completed water quality sampling within 48 hours after the end of the SSO, and submitted these samples for bacteriological and ammonia testing as required by the Order.

C. Final corrective action(s) completed and/or planned to be completed, including a schedule for actions not yet completed are described below.

3.0 WATER QUALITY MONITORING

A. Water quality sampling activities conducted, including analytical results and evaluation of

the result, are as follows.

B. Figure 2 shows a location map showing water quality sampling points.

If you have further questions or would like additional information about this Technical Report, please contact me by phone at (650) 947-2516 or by email at rchiu@losaltoshills.ca.gov

Sincerely,

Richard Chiu, Jr, P.E.
Public Works Director, Town Senior Engineer

Appendix F

FOG Control Program Element Supporting Documents

Appendix F Documents

1. Current List of Food Service Establishments in Los Altos Hills
2. Residential FOG Public Outreach Poster
3. Food Handling Facilities FOG Public Outreach Poster

Appendix F – Document 1

Current List of Food Service Establishments in Los Altos Hills

List of Los Altos Hills Food Service Facilities

The table below shows the entities with County Food Permit services, and of these organizations, the ones with working kitchens. The Town requires FOG control through Title 6, Chapter 4 sections 424 and 425 of the code. The Town has not had increased FOG issues related to these organizations, or to residential use, and therefore does not currently have a formal FOG program.

Since 2011, there has not been any FOG related SSOs in the Town's sanitary sewer collection system. In addition, based on cleaning records from West Bay's first contract year with the Town, less than half a percent of the pipes cleaned were observed to have grease in which only light traces in the pipes are found.

No.	Food Facility Name	Address No.	Street Name	Kitchen	County Permit Food Services
	CHURCHES				
1	Congregation Beth Am	26790	**Arastradero Rd**	Yes	No
2	Poor Clare Nuns	28210	**Natoma Rd**		No
3	St. Luke's Chapel in the Hills	26140	**Duval Way**		No
	COUNTRY CLUB				
4	Fremont Hills Country Club	12889	**Viscaino Place**	Yes	Yes
	SCHOOLS				
5	Gardner Bullis School	25890	**Fremont Rd**	Yes	Yes
6	Fremont Hills Stables, Inc.	26941	**Purissima Rd**		No
7	Pinewood School	26800	**Fremont Rd**	No	Yes
8	Saint Nicholas School	12816	**El Monte Rd**	Yes	No (but needs one)

Appendix F – Document 2
Residential FOG Public Outreach Poster

Correctly Dispose of Fats, Oils, and Grease (FOG)

What you pour down your sink may be costing you money, time and hassle.
Leftover fats, oils, and grease (FOG) from food can consist of liquid, solid, yellow or brown grease substances. these should never be poured down a drain or toilet. FOG may be liquid when poured but can solidify in your plumbing. Over time it can clog your pipes, spilling raw sewage into a street, a stream or even your own home. Repairing clogged pipes can cost hundreds of dollars to fix and thousands of dollars if the clog causes wastewater to spill out and damage bathrooms and floors.

What to do with FOG:

1. Try removing grease from plates and utensils by wiping oily dishes with a paper towels, then place it in your green compost cart.
2. For small amounts of oil and grease, use paper towels or other compostable items to absorb them and place them in your green compost cart.
3. Bring large amounts of unwanted cooking oil to the Household Hazardous Waste Station.
4. Consider using dry absorbent materials to clean up spills and dispose in the trash.

What to do with food scraps:

1. Try composting produce scraps at home to reduce waste, create healthy soil and improve your garden.
2. Toss any meat scraps, bones, or dairy products in the green cart with the lawn trimmings. See http://www.cityofpaloalto.org/gov/depts/pwd/zerowaste/projects/foodscraps.asp for details.

Have a clogged sewer line? Always call us before calling a plumber! The City needs to check the line to make sure that no other utility services will be damaged by clearing it. Call us at (650) 496-6995 and visit www.cityofpaloalto.org/safeutility for more information on avoiding sewer backups and safety information.

Appendix F – Document 3
Food Handling Facilities FOG public outreach poster

Be a part of the Team!
Keep the Bay CLEAN!

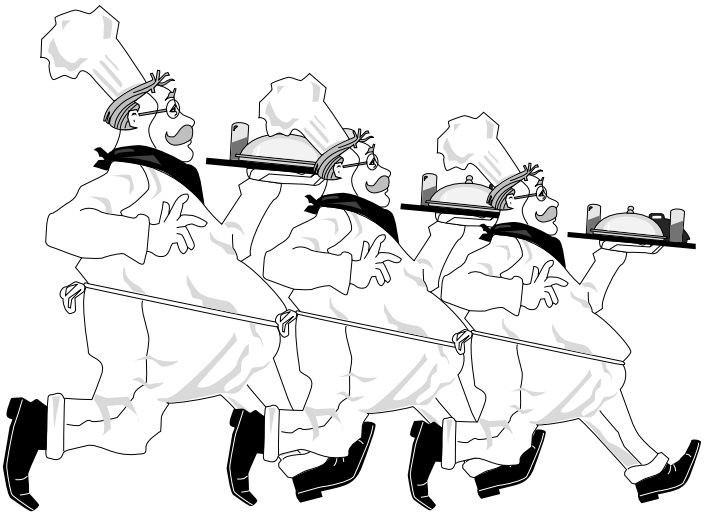

Water Quality Protection Guidelines for Food Handling Facilities

Regional Water Quality Control Plant

Operated by the City of Palo Alto for the communities of East Palo Alto, Los Altos, Los Altos Hills, Mountain View, Palo Alto, and Stanford

Water quality protection guidelines for food handling facilities

In the Santa Clara Valley, storm drains flow directly to local creeks and San Francisco Bay, with no treatment. Storm water pollution is a serious problem for wildlife dependent on our waterways, and for people who live near polluted streams or baylands.

Food handling facilities such as restaurants, institutional cafeterias, grocery stores, bakeries, and delis, can contribute to stormwater pollution mainly through improper cleanup practices that allow food particles, oil and grease, and cleaning products to flow to a street, gutter, or storm drain.

In communities served by the Regional Water Quality Control Plant (East Palo Alto, Los Altos, Los Altos Hills, Mountain View, Palo Alto, and Stanford) discharge of grease or oil to the storm drain is prohibited by ordinance. Sanitary sewer grease traps or other grease removal devices are required for all new construction and are being retrofitted on existing facilities after a violation of the ordinance has been cited or by January 1, 1997, whichever comes sooner.

NO DUMPING!!
FLOWS TO BAY

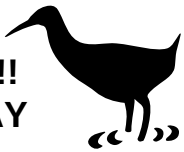

Following the "Best Management Practices" (BMPs) in this manual will ensure compliance with ordinance requirements with respect to both the sanitary sewer and the storm drains, and will contribute to a cleaner Bay.

BMPs for a cleaner Bay

Contents

What types of pollution do food handling facilities generate? 4

Sewer of Storm Drain? 4

Summary of BMPs 5

BMP #1
Pavement cleaning and spill cleanup 6

BMP #2
Cleaning and maintaining equipment 8

BMP #3
Grease handling and disposal 9

BMP #4.
Refrigeration/cooling tower maintenance 9

BMP #5
Landscaping and garden maintenance 10

BMP #6
Training employees 11

Numbers to call in case of a spill or emergency 11

Checklist for Water Quality Protection ..... back cover

What types of pollution do food handling facilities generate?

All substances left in a street, gutter, parking lot, or alley—or dumped into a storm drain—end up in local creeks and San Francisco Bay, with no treatment.

- In addition to drawing flies and vermin and causing odor and public health problems, **decaying organic materials** use up dissolved oxygen in streams and the Bay, stressing or killing aquatic animals.
- **Oil and grease** cause additional health problems, and also plug sanitary sewer lines, causing sewer backups and severe risks to human health.
- Food handling facilities sometimes also discharge **toxic chemicals**, including cleaning products, disinfectants, and pesticides. Even biodegradable soaps contain ingredients which are initially toxic to aquatic life.

Sewer or storm drain?

If you are not certain whether a drain leads to the storm drain or sanitary sewer, call your city's sewer department so that they can help you resolve the question. In general, drains inside the building are connected to the sanitary sewer, and outside drains (except for capped sanitary sewer "cleanouts") are connected to the storm drain system. Sanitary sewer cleanouts are usually 6 inches in diameter or smaller, and storm drain inlets are larger – *but there are exceptions.* You need to know for sure!

When you're doing this. . .	. . . Don't forget to do this!
Cleaning dumpster areas, loading docks, or any paved surfaces	Control litter. Make sure the leasing company maintains and cleans dumpsters regularly; return leaking dump-sters for repair immediately. If you must wash down a dumpster, loading dock, or other outdoor surface for health reasons, use dry cleanup methods first, and then rinse, collect water, and discharge to the sink or indoor floor drain.
Cleaning up spills	Control the spill, then sweep or clean up with rags and granular absorbents. Dispose absorbents to trash, then mop and collect water, put down sink or indoor floor drain.
Cleaning up hazardous materials (e.g. cleaning products)	Use procedure above, but send residue and absorbents to a hazardous waste disposal site.
Cleaning large equipment	Clean indoors or within a bermed outdoor area where cleaning water will not flow to a storm drain. Collect water and dispose to a sink or indoor floor drain.
Handling grease, oils, and meat fat	Save for recycling in sealed containers. Never pour into a sink, floor drain, or storm drain.
Maintaining cooling towers and refrigeration equipment	Make sure all discharges go to the sanitary sewer and NOT to the street, storm drain, or creek. Advise your maintenance contractor about storm drain protection.
Landscaping and garden maintenance	Control erosion. Keep yard waste out of the street and storm drain. Use chemicals sparingly, and never in wet weather.

BMP #1: Spill cleanup and pavement cleaning

When cleaning dumpster areas, loading docks, and other paved surfaces, and whenever a spill occurs

- ❑ First, stop any spill at its source.
- ❑ Next, dry sweep.
- ❑ **IF** wet cleaning (including high-temperature or high-pressure washing) is required, use this 3-step process:
  1. Clean up as much as possible with rags.
  2. Use granular absorbents (e.g. cat litter) to collect residue. Sweep and dispose in trash if hazardous materials are not involved.
  3. Mop (or, if absolutely necessary, wash) and collect water, and dispose of water in sink or sewer drain, **not** the storm drain.
- ❑ If a final rinse is necessary for health reasons, collect the rinse-water and dispose to sink or indoor floor drain. If outdoors, block storm drain before applying water, collect water, and dispose to sink or indoor drain.
- ❑ Do not use bleach or disinfectants if there is a possibility that rinse- water could flow to a street, gutter, or storm drain.

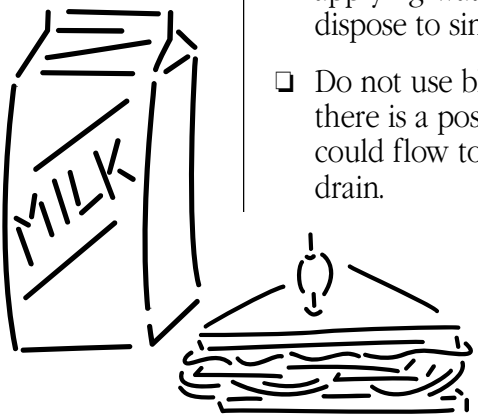

Dumpsters and loading dock areas

- ❑ Have spill cleanup materials handy in dumpster and loading dock areas.
- ❑ Keep litter from accumulating around loading docks by providing trash receptacles and encouraging employees to use them.
- ❑ Make sure that dumpsters and containers of grease, meat fat, and used cooking oil are always tightly covered.

Spill Cleanup plan

Each establishment should have a spill clean-up plan that includes:

- ✓ Procedures for different types of spills
- ✓ Schedule for training and refreshing employees about the procedures
- ✓ Clean-up kits in well-marked, accessible locations
- ✓ Designation of a key employee who monitors clean-up

- ❑ Post the plan in the work area.

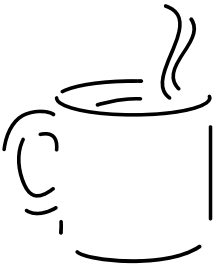

BMP #2: Cleaning and maintaining equipment

When cleaning floor mats, carts, tray racks, exhaust filters, hoods, cooking equipment, food containers, etc.

- ❑ **Do not clean equipment outdoors or in any area where water may flow to a street, gutter, storm drain, or creek.**
- ❑ In order of preference:
  1. Clean equipment in a designated indoor area, such as a kitchen sink or floor, with a drain connected to the sanitary sewer.
  2. Clean equipment in a designated *covered* outdoor area with a drain connected to the sanitary sewer. This area should be isolated from the storm drain with a berm or other barrier.
  3. Clean equipment in a small designated uncovered outdoor area, isolated from the storm drain with a berm or other barrier, where water can be collected for disposal in the sanitary sewer.
- ❑ Use a static rinse tank to clean filters, screens, frying racks, etc. Dispose of used solution to the sanitary sewer.
- ❑ If possible, use floor mats that are small enough to be cleaned inside near a floor sink or drain plumbed to the sanitary sewer.
- ❑ Drain, oven, and toilet bowl cleaners: Use up, and place empty containers in dumpster.

BMP #3: Grease handling and disposal

When cleaning frying equipment or storing fat or grease for removal to a grease recycler

- ❑ **Never pour oil, grease, or large quantities of oily liquids such as sauces or salad dressings down a sink, sanitary sewer drain, storm drain, or into a dumpster.** Most landfills will not accept grease or other liquid wastes from business/commercial customers.
- ❑ Recycle waste oil and grease whenever possible.
- ❑ Inspect and clean grease interceptors and traps regularly. In Santa Clara County, health department regulations require you to clean grease traps at least every three months.

BMP #4. Refrigeration/ cooling tower maintenance

For large food handling facilities such as grocery stores, with large refrigeration units and cooling towers

- ❑ Make sure all discharges from cooling equipment goes to the sanitary sewer and NOT to the street, storm drain, or creek.
- ❑ Make sure your maintenance contractor is knowledgeable and skilled at minimizing corrosion with correct chemical treatment.

BMP #5: Landscaping and garden maintenance

For restaurants and other businesses with landscaped grounds

- ❑ Schedule grading and earth-moving landscaping projects for periods of dry weather.
- ❑ When landscaping, protect nearby storm drains with hay bales or other erosion controls. **Refer to *Blueprint for a Clean Bay*, a simple manual of construction practices that will minimize stormwater pollution, available from the Regional Water Quality Control Plant or the Santa Clara Valley Nonpoint Source Pollution Control Program. (See numbers at right.)**
- ❑ Collect grass clippings, leaves, tree pruning waste, etc. for composting or place in trash. Do not blow, rake, or sweep yard waste into the street or gutter.
- ❑ Use minimal amounts of pesticides, fertilizers, etc.—and only in dry weather periods. Never exceed manufacturer's recommended application rates. Landscaping runoff is a significant source of stormwater pollution.
- ❑ Do not use copper-based algicides in pools or fountains. Control algae with chlorine or other alternatives to copper-based products.

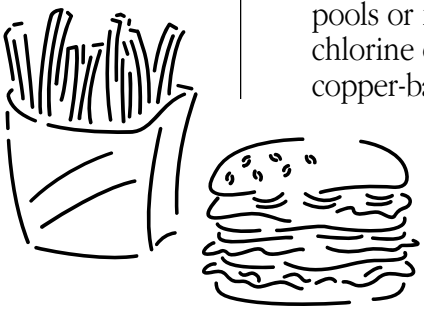

- ❑ Discuss good pollution control practices with all employees at least quarterly.
- ❑ Systematically inform new employees about these best management practices.
- ❑ Post cleanup guidelines and the name of each shift's designated spill cleanup monitor in a visible location.
- ❑ Complete the checklist on the back of this brochure, and share it with employees.

For more information:

In East Palo Alto, Los Altos Hills, Palo Alto, and Stanford, call the Regional Water Quality Control Plant
(business hours) 329-2598

In Mountain View 903-6378

In Los Altos 948-1491 x230

Santa Clara Valley Water District
(business hours) 408/265-2600
(evenings,weekends) 408/395-8121

For additional copies of this brochure call the Regional Water Quality Control Plant, 329-2598.

BMP #6: Training employees

Food handling establishments often have high rates of employee turnover

In case of a spill or emergency...

For help stopping spills from flowing to a creek or storm drain, call Emergency Response 911 IMMEDIATELY!

Checklist for Water Quality Protection

	Yes	No	n/a
General Information			
1. All management personnel have reviewed this brochure.			
2. All employees have been advised of these BMPS.			
3. Storm drains are stencilled "No Dumping! Flows to Bay." (For stencils, call 800/794-2482.)			
Grease Traps/Interceptors			
1. A grease trap is located inside the facility.			
2. A grease interceptor is located outside the facility.			
3. Frequency of pumping/removing grease: every ___weeks,___months, ___years			
4. All records of grease pumping are kept for three years, as required by ordinance.			
5. The following fixtures are connected to a trap or interceptor:			
a. Wall- or floor-mounted sinks			
b. Automatic dishwashers			
c. Floor drains			
d. Other_____			
Equipment Cleaning			
1. The following items are cleaned in such a manner that all washwater goes to the sanitary sewer or is hauled offsite:			
a. Grease filters			
b. Floor mats			
c. Floors (mop water and rinse water)			
d. Grill(s)			
e. Other_____			
Dumpsters and Recycling Containers			
1. Dumpsters and recycling containers are always covered.			
2. There are no signs of leaks or missing drain plugs.			
3. Spilled materials around garbage containers are picked up regularly.			
4. If water is used to clean the area, washwater is collected or directed to the sanitary sewer.			
Spill Response			
1. In case of a spill (e.g. grease), absorbents such as cat litter are readily available.			
2. Employees are trained:			
a. To control and clean up spills			
b. To call for assitance in case of emergencies			

Appendix G
System Evaluation and Capacity Assurance Plan
Supporting Documents

Appendix H
Monitoring, Measurement, & Program Modifications Element Supporting Documents

Appendix H Documents

1. Element 9: SSMP Monitoring Tracking Sheet

Appendix H – Document 1
Element 9: SSMP Monitoring Tracking Sheet

Element 9: SSMP Monitoring Tracking Sheet

Parameter *(RWCQB SSMP Element)*	Year				
	2015	2014	2013	2012	2011
1. Number of claims[1] (Element 3)	-	-	-	-	-
2. Length of pipe CCTV'd *(Element 4)*	125,818 feet	83,735 feet	2,794 feet	4,641 feet	3,633 feet
3. Length of pipe cleaned *(Element 4)*	125,818 feet	83,735 feet	118,690 feet	235,342 feet	174,531 feet
4. Total number of manholes inspected[1] *(Element 4)*	-	-	-	-	-
5. Length of pipe repaired *(Element 4)*	2,927 feet	-	-	-	-
6. Odor complaints[1] *(Element 6)*	-	-	-	-	-
7. Total number of hotspots[1] *(Element 7)*	159	-	-	-	-
8. Average emergency response time *(Element 6)*	31 min	31 min	58 min	57 min	52 min
9. Maximum emergency response time *(Element 6)*	59 min	59 min	195 min	193 min	265 min
10. % of SSO volume contained or returned to sewer *(Element 6)*	82%	45%	8.00%	0.00%	25%
11. Total number of SSO *(Element 6)*	7	32	12	14	21
12. Total volume of SSOs *(Element 6)*	713 gal	11,963 gal	1,826 gal	5,294 gal	5,024 gal
13. Number of repeat SSOs *(Element 6)*	0	0	0	1	1
14. Number of SSOs due to FOG *(Element 6)*	0	0	0	0	0
15. Number of SSOs due to roots *(Element 6)*	5	16	9	11	19
16. Number of SSOs due to debris *(Element 6)*	1	1	2	0	1
17. Number of SSOs due to pump station failures *(Element 6)*	0	1	0	1	0
18. Number of SSOs due to pipe failures *(Element 6)*	0	0	1	0	1
19. Number of SSOs due to capacity *(Element 6)*	0	0	0	1	0

Note: 1) Starting 2016, these metrics will be included in the Town's list of metrics being monitored.

Appendix I

SSMP Audit Element Supporting Documents

Appendix I Documents

1. SSMP Audits
2. SSMP Change Log
3. SSMP Audit Report Blank Form

Appendix I – Document 1
SSMP Audits

Appendix 10 - 1

Los Altos Hills
SSMP Audit Report Form

May 2018

Introduction	Yes	No
Is the current system description complete and up to date? Are all infrastructure statistics current and complete?	**x**	
Discussion: **System information is complete and up to date. Infrastructure statistics are updated on quarterly and reviewed for accuracy and completeness.**		

	Element 1 – Goals	Yes	No
A	Are the goals stated in the SSMP still appropriate and accurate?	**x**	
Discussion: **Goals are appropriate and the Town will review and re-evaluate goal revisions based on maintenance and CIP needs.**			

	Element 2 -- Organization	Yes	No
A	Is the Contact Information current?		x
B	Is the Sanitary Sewer Overflow responder List current?	x	
C	Is the Organization Chart included in the SSMP current?	x	
D	Are the position descriptions an accurate portrayal of staff responsibilities?	**x**	
E	Is the chain of communication for reporting and responding to SSOs accurate and up-to-date?	**x**	

Element 2 -- Organization	Yes	No
Discussion: **The SSMP reflects current responsibilities, information, and procedures for response and reporting. Update contact list with phone numbers of key personnel & contractors (as Appendix A with classifications responsible for specific SSMP elements).**		

Element 3 – Legal Authority		Yes	No
Does the SSMP contain current references to Los Altos Hill's Code documenting the Town's legal authority to:			
A	Prevent illicit discharges?	x	
B	Require proper design and construction of sewers and connections?	x	
C	Ensure access for maintenance, inspection, or repairs for portions of the lateral owned or maintained by the Town?		x*
D	Limit discharges of fats, oil and grease?	x	
E	Enforce any violation of its sewer ordinances?	x	
F	Were any changes or modifications made in the past year or since the last SSMP audit to town Ordinances, Regulations, or standards?		x
Discussion: **The Town has appropriate and comprehensive legal authority to regulate its wastewater collection system.** *** Upper and lower laterals are privately owned and maintained. The Town has legal authority to abate any nuisance related to laterals.** **No changes or modifications were made in the past year or since the last SSMP audit to the Town ordinances, regulations, or standards.**			

Element 4 – Operations and Maintenance		Yes	No
Collection System Maps			
A	Does the SSMP reference the current process and procedures for maintaining the City's sanitary sewer system maps?	**x**	
B	Are the Town's wastewater collection system maps complete, current, and sufficiently detailed?	**x**	
Prioritized Preventive Maintenance			
C	Does the SSMP describe current preventive maintenance activities and the system for prioritizing the cleaning of sewer lines?	**x**	
D	Based upon the SSO information in CIWQS and the Annual SSO Report, are the City's preventive maintenance activities sufficient and effective in minimizing SSOs and blockages?	**x**	
Rehabilitation and Replacement Program			
E	Is there an ongoing condition assessment program sufficient to rank the condition of sewer pipes and schedule rehabilitation? Are the current components of this program documented in the SSMP?	**x**	
F	Does the rehabilitation and replacement plan include a capital improvement plan that addresses proper management and protection of the infrastructure assets? Does the plan include a time schedule for implementing the short and long-term plans plus a schedule for developing the funds needed for the capital improvement plan?	**x**	
Contingency Equipment and Replacement Inventory			
G	Does the SSMP list the major equipment currently used in the operation and maintenance of the collection system?	**x**	
H	Are contingency equipment and replacement parts sufficient to respond to emergencies and properly conduct regular maintenance?	**x**	
Training			
I	Are the training records current?		**x**
J	Does the SSMP document current training expectations and programs?		**x**

Element 4 – Operations and Maintenance	Yes	No
Discussion: **The preventive maintenance program is adequate and comprehensive and the SSMP has been revised to fully reflect the current activities conducted by West Bay including plans for revising future activities. Training and training documentation is handled by WBSD.**		

	Element 5 – Design and Performance Standards	Yes	No
A	Does the SSMP reference current design and construction standards for the installation of new sanitary sewer systems, pump stations and other appurtenances and for the rehabilitation and repair of existing sanitary sewer systems?	**x**	
B	Does the SSMP document current procedures and standards for inspecting and testing the installation of new sewers, pumps, and other appurtenances and the rehabilitation and repair of existing sewer lines?	**x**	
Discussion: **Standards are adequate and no deficiencies are noted.**			

	Element 6 – Overflow and Emergency Response Plan	Yes	No
A	Does the Town's Overflow Emergency Response Plan (OERP) contain proper notification procedures so that the primary responders and regulatory agencies are informed of all sanitary sewer overflows (SSOs) as required by the WDR and MRP?	**x**	
B	Does the OERP have a program to ensure an appropriate response to all overflows?	**x**	
C	Does the OERP contain procedures to ensure prompt notification to appropriate regulatory agencies and other potentially affected entities of all SSOs that potentially affect public health or reach waters of the State in accordance with the MRP? Does the SSMP identify the officials who will receive immediate notification of such SSOs?	**x**	
D	Are staff and contractor personnel aware of the procedures of the OERP?	**x**	

Element 6 – Overflow and Emergency Response Plan		Yes	No
E	Does the OERP contain procedures to address emergency operations such as traffic and crowd control and other necessary response activities?	**x**	
F	Does the OERP ensure that all reasonable steps are taken to contain and prevent the discharge of untreated and partially treated wastewater to waters of the United States and to minimize or correct any adverse impact on the environment resulting from SSOs, including such accelerated or additional monitoring as may be necessary to determine the nature and impact of the discharge?	**x**	
G	Considering SSO performance data, is the OERP effective in handling SSOs in order to safeguard public health and the environment?	**x**	
H	Is the Water Quality Monitoring Plan current? Have staff been trained and practiced on response to an SSO of large volume?	**x**	
I	Was sampling conducted within 48 hours for all SSOs greater than 50,000 gallons and were results entered for these SSOs through the CIWQS website?	**N/A**	
J	Has the Town prepared a Technical Report for all SSOs larger than 50,000 gallons? Have all Technical Reports been filed on the CIWQS website as required?	**N/A**	

Discussion:

The Town's SSMP and OERP (through West Bay) have been revised to comply with the new requirements for reporting, monitoring and sampling of SSOs. This includes the requirements related to the new SSO categories as well as the requirements for SSOs that exceed 50,000 gallons, the preparation of Technical reports and a water quality monitoring plan.

There have been no SSOs greater than 50,0000 gallons that require a Technical Report or water quality sampling.

Element 7 – Fats, Oils, and Grease (FOG) Control Program		Yes	No
A	Does the Fats, Oils, and Grease (FOG) Control Program include a description of public education outreach efforts that promote proper handling and disposal of FOG?	**x**	
B	Does the FOG program include a plan for the disposal of FOG generated within the sewer system service area?		**x**
C	Does the Town have sufficient legal authority to prohibit discharges to the system and identify measures to prevent SSOs and blockages caused by FOG?	**x**	
D	Are there requirements to install grease removal devices (such as traps or interceptors), best management practices (BMP) requirements, record keeping, maintenance requirements and reporting requirements established in the City's FOG Control Program?	**x**	
E	Does the Town have authority to inspect grease producing facilities and have sufficient staff to inspect and enforce the FOG ordinance?	**x**	
F	Does the FOG control program identify sections of the collection system subject to FOG blockages, establish a cleaning schedule and address source control measures to minimize these blockages?		**x**
G	Does the FOG control program implement source control measures for all sources of FOG discharged to the collection system?		**x**
H	Is the current FOG program effective in minimizing blockages of sewer lines resulting from discharges of FOG to the system?	**x**	

Discussion:

The Town does not have a formal FOG control program because it is primarily residential and has only four food service facilities, one of which is Foothill College which discharges into the City of Los Altos' sewer collection system. The Town is prepared to evaluate the need for additional FOG control measures if stoppages and SSOs caused by FOG are ever experienced. However, there have been no FOG-related instances of stoppages or SSOs in the past five years and consequently there is no need at this point to revise the Town's program or SSMP.

The Town has appropriate legal authority to regulate discharges of Fog and supports Palo Alto's public education efforts related to FOG.

Element 8 – System Evaluation and Capacity Assurance Plan		Yes	No
A	Does the System Evaluation and Capacity Assurance Plan evaluate hydraulic deficiencies in the system and provide estimates of peak flows associated with conditions similar to those causing overflow events, if applicable?	**x**	
B	Does the Town's capital improvement program (CIP) establish a schedule of approximate completion dates for both short-term and long-term improvements and is the schedule reviewed and updated to reflect current budgetary capabilities and activity accomplishment?	**x**	
C	Does the Town take steps needed to establish a short and long-term CIP to address hydraulic deficiencies, including prioritization, alternatives analysis, and schedules? Are repair and replacement projects developed based upon condition assessment and/or field maintenance results?	**x**	

Discussion:

The Town recently adopted the updated Wastewater Collection System Master Plan (May 2018) which identified three capacity related projects. The projects identified in the updated Master Plan will be evaluated based along with maintenance and operation field data to develop a comprehensive list of short and long-term capacity and replacement projects.

Element 9 – Monitoring, Measurement, and Program Modifications		Yes	No
A	Does the Town maintain relevant information that can be used to establish and prioritize appropriate SSMP activities?	**x**	
B	Does the Town monitor the implementation and, where appropriate, measure the effectiveness of each element of the SSMP?	**x**	
C	Does the Town assess the success of the preventive maintenance program?	**x**	
D	Does the Town update program elements, as appropriate, based upon monitoring or performance evaluations?	**x**	
E	Does the SSMP identify and illustrate SSO trends, including frequency, location and volume of SSOS?	**x**	

Element 9 – Monitoring, Measurement, and Program Modifications	Yes	No
Discussion: **The Town does measure the effectiveness of each element of the SSMP.** **The current maintenance progress reports include an summary of important and relevant system data.**		

	Element 10 – SSMP Audits	Yes	No
A	Does the audit focus on the effectiveness of the SSMP? If not, what needs to be changed to increase the effectiveness of the overall collection system program?	x	
B	Were the audit results shared with the Town Council? And the public, via the City website?		x
C	Will the SSMP Audit be completed, reviewed, and filed as an Appendix to the SSMP on a biennial basis?	x	
D	Do any proposed changes to the SSMP require Council approval if they have a substantial change in the policies and procedures for collection system operations and maintenance?	x	
Discussion: **Audit results have not been shared with Council, but staff will evaluate the need for this. Council is a policy-making body, but day-to-day operational changes are made by staff, without the need for Council input. Significant policy and cost issues are and will continue to be referred for Council approval.**			

	Element 11 – Communication Program	Yes	No
A	Does the Town communicate on a regular basis with the public and other agencies about the development and implementation of the SSMP? Does the communication system provide the public the opportunity to provide input as the program is developed and implemented? Were annual progress reports and metrics of implementation of the SSMP provided to the Town Council?	**x**	**x**

Element 11 – Communication Program	Yes	No
Discussion: **The town communicates with the public and other agencies are required by O&M operation and in compliance with regulatory requirements.**		

	Change Log	Yes	No
A	Is the SSMP Change Log current and up to date?	**x**	
Discussion: **The Change Log required by the 2013 MRP has been developed and is being implemented.**			

Appendix I – Document 2
SSMP Change Log

Town of Los Altos Hills
SSMP Change Log

Date	SSMP Element	Description of Change/Revision Made	Change Authorized by :
6/30/2017	5	Updated the Sanitary Sewer Main Standard Specficitions	TT
1/29/2019	Appendix A	Updated Organization Element Supporting Documents	NB

Note: Any changes/revisions made after the last certification of the SSMP will be documented in this Change Log per Section E.3 of Order No. WQ 2013-0058-EXEC.

Appendix I – Document 3
SSMP Audit Report Blank Form

Los Altos Hills
SSMP Audit Report Form

Introduction	Yes	No
Is the current system description complete and up to date? Are all infrastructure statistics current and complete?		
Discussion:		

	Element 1 – Goals	Yes	No
A	Are the goals stated in the SSMP still appropriate and accurate?		
Discussion:			

	Element 2 -- Organization	Yes	No
A	Is the Contact Information current?		
B	Is the Sanitary Sewer Overflow responder List current?		
C	Is the Organization Chart included in the SSMP current?		
D	Are the position descriptions an accurate portrayal of staff responsibilities?		
E	Is the chain of communication for reporting and responding to SSOs accurate and up-to-date?		
Discussion:			

Element 3 – Legal Authority		Yes	No
Does the SSMP contain current references to Los Altos Hill's Code documenting the Town's legal authority to:			
A	Prevent illicit discharges?		
B	Require proper design and construction of sewers and connections?		
C	Ensure access for maintenance, inspection, or repairs for portions of the lateral owned or maintained by the Town?		
D	Limit discharges of fats, oil and grease?		
E	Enforce any violation of its sewer ordinances?		
F	Were any changes or modifications made in the past year or since the last SSMP audit to town Ordinances, Regulations, or standards?		
Discussion:			

Element 4 – Operations and Maintenance		Yes	No
Collection System Maps			
A	Does the SSMP reference the current process and procedures for maintaining the City's sanitary sewer system maps?		
B	Are the Town's wastewater collection system maps complete, current, and sufficiently detailed?		
Prioritized Preventive Maintenance			
C	Does the SSMP describe current preventive maintenance activities and the system for prioritizing the cleaning of sewer lines?		
D	Based upon the SSO information in CIWQS and the Annual SSO Report, are the City's preventive maintenance activities sufficient and effective in minimizing SSOs and blockages?		
Rehabilitation and Replacement Program			
E	Is there an ongoing condition assessment program sufficient to rank the condition of sewer pipes and schedule rehabilitation? Are the current components of this program documented in the SSMP?		
F	Does the rehabilitation and replacement plan include a capital improvement plan that addresses proper management and protection of the infrastructure assets? Does the plan include a time schedule for implementing the short and long-term plans plus a schedule for developing the funds needed for the capital improvement plan?		
Contingency Equipment and Replacement Inventory			
G	Does the SSMP list the major equipment currently used in the operation and maintenance of the collection system?		
H	Are contingency equipment and replacement parts sufficient to respond to emergencies and properly conduct regular maintenance?		
Training			
I	Are the training records current?		
J	Does the SSMP document current training expectations and programs?		

Element 4 – Operations and Maintenance	Yes	No
Discussion:		

	Element 5 – Design and Performance Standards	Yes	No
A	Does the SSMP reference current design and construction standards for the installation of new sanitary sewer systems, pump stations and other appurtenances and for the rehabilitation and repair of existing sanitary sewer systems?		
B	Does the SSMP document current procedures and standards for inspecting and testing the installation of new sewers, pumps, and other appurtenances and the rehabilitation and repair of existing sewer lines?		
Discussion:			

	Element 6 – Overflow and Emergency Response Plan	Yes	No
A	Does the Town's Overflow Emergency Response Plan (OERP) contain proper notification procedures so that the primary responders and regulatory agencies are informed of all sanitary sewer overflows (SSOs) as required by the WDR and MRP?		
B	Does the OERP have a program to ensure an appropriate response to all overflows?		
C	Does the OERP contain procedures to ensure prompt notification to appropriate regulatory agencies and other potentially affected entities of all SSOs that potentially affect public health or reach waters of the State in accordance with the MRP? Does the SSMP identify the officials who will receive immediate notification of such SSOs?		
D	Are staff and contractor personnel aware of the procedures of the OERP?		

Element 6 – Overflow and Emergency Response Plan		Yes	No
E	Does the OERP contain procedures to address emergency operations such as traffic and crowd control and other necessary response activities?		
F	Does the OERP ensure that all reasonable steps are taken to contain and prevent the discharge of untreated and partially treated wastewater to waters of the United States and to minimize or correct any adverse impact on the environment resulting from SSOs, including such accelerated or additional monitoring as may be necessary to determine the nature and impact of the discharge?		
G	Considering SSO performance data, is the OERP effective in handling SSOs in order to safeguard public health and the environment?		
H	Is the Water Quality Monitoring Plan current? Have staff been trained and practiced on response to an SSO of large volume?		
I	Was sampling conducted within 48 hours for all SSOs greater than 50,000 gallons and were results entered for these SSOs through the CIWQS website?		
J	Has the Town prepared a Technical Report for all SSOs larger than 50,000 gallons? Have all Technical Reports been filed on the CIWQS website as required?		
Discussion:			

Element 7 – Fats, Oils, and Grease (FOG) Control Program		Yes	No
A	Does the Fats, Oils, and Grease (FOG) Control Program include a description of public education outreach efforts that promote proper handling and disposal of FOG?		
B	Does the FOG program include a plan for the disposal of FOG generated within the sewer system service area?		
C	Does the City have sufficient legal authority to prohibit discharges to the system and identify measures to prevent SSOs and blockages caused by FOG?		

Element 7 – Fats, Oils, and Grease (FOG) Control Program		Yes	No
D	Are there requirements to install grease removal devices (such as traps or interceptors), best management practices (BMP) requirements, record keeping, maintenance requirements and reporting requirements established in the City's FOG Control Program?		
E	Does the City have authority to inspect grease producing facilities and have sufficient staff to inspect and enforce the FOG ordinance?		
F	Does the FOG control program identify sections of the collection system subject to FOG blockages, establish a cleaning schedule and address source control measures to minimize these blockages?		
G	Does the FOG control program implement source control measures for all sources of FOG discharged to the collection system?		
H	Is the current FOG program effective in minimizing blockages of sewer lines resulting from discharges of FOG to the system?		
Discussion:			

Element 8 – System Evaluation and Capacity Assurance Plan		Yes	No
A	Does the System Evaluation and Capacity Assurance Plan evaluate hydraulic deficiencies in the system and provide estimates of peak flows associated with conditions similar to those causing overflow events, if applicable?		
B	Does the Town's capital improvement program (CIP) establish a schedule of approximate completion dates for both short-term and long-term improvements and is the schedule reviewed and updated to reflect current budgetary capabilities and activity accomplishment?		
C	Does the Town take steps needed to establish a short and long-term CIP to address hydraulic deficiencies, including prioritization, alternatives analysis, and schedules? Are repair and replacement projects developed based upon condition assessment and/or field maintenance results?		

Element 8 – System Evaluation and Capacity Assurance Plan	Yes	No
Discussion:		

	Element 9 – Monitoring, Measurement, and Program Modifications	Yes	No
A	Does the Town maintain relevant information that can be used to establish and prioritize appropriate SSMP activities?		
B	Does the Town monitor the implementation and, where appropriate, measure the effectiveness of each element of the SSMP?		
C	Does the Town assess the success of the preventive maintenance program?		
D	Does the Town update program elements, as appropriate, based upon monitoring or performance evaluations?		
E	Does the SSMP identify and illustrate SSO trends, including frequency, location and volume of SSOS?		
Discussion:			

	Element 10 – SSMP Audits	Yes	No
A	Does the audit focus on the effectiveness of the SSMP? If not, what needs to be changed to increase the effectiveness of the overall collection system program?		
B	Were the audit results shared with the Town Council? And the public, via the City website?		

	Element 10 – SSMP Audits	Yes	No
C	Will the SSMP Audit be completed, reviewed, and filed as an Appendix to the SSMP on a biennial basis?		
D	Do any proposed changes to the SSMP require Council approval if they have a substantial change in the policies and procedures for collection system operations and maintenance?		
Discussion:			

	Element 11 – Communication Program	Yes	No
A	Does the Town communicate on a regular basis with the public and other agencies about the development and implementation of the SSMP? Does the communication system provide the public the opportunity to provide input as the program is developed and implemented? Were annual progress reports and metrics of implementation of the SSMP provided to the Town Council?		
Discussion:			

	Change Log	Yes	No
A	Is the SSMP Change Log current and up to date?		
Discussion:			

Appendix J

Communication Program Element Supporting Documents

Appendix J Documents

1. Partners mailing list

Appendix J – Document 1
Partners Mailing List

Partners Mailing List

document/partners/allpartnersdistlist 03/2016

Partner Agency	Name	Title	Address	Tel. No.	Fax No.
Mountain View Public Works Department 903-6311	Michael Fuller	Director of Public Works Email: michael.fuller@mountainview.gov	City of Mountain View 500 Castro Street P.O. Box 7540 Mountain View, Ca 94041	(650) 903-6077	(650) 962-8503
	Gregg Hosfeldt	Assistant Director of Public Works Email: gregg.hosfeldt@mountainview.gov	City of Mountain View 231 N Whisman Mountain View, Ca 94043	(650) 903-6329	(650) 903-6323
	Jacqueline Solomon	Assistant Director of Public Works Public Services Division Email: jacqueline.solomon@mountainview.gov	City of Mountain View 500 Castro Street P.O. Box 7540 Mountain View, Ca 94041	(650) 903-6541	(650) 962-8079
Finance Department 903-6365	Patty Kong	Director of Finance & Administrative Services Email: patty.kong@mountainview.gov	City of Mountain View 500 Castro Street P.O. Box 7540 Mountain View, Ca 94041	(650) 903-6006	(650) 968-1786
	Suzanne Niederhofer	Assistant Director of Finance & Administrative Services Email: Suzanne.niederhofer@mountainview.gov	City of Mountain View 500 Castro Street P.O. Box 7540 Mountain View, Ca 94041	(650) 903-6024	(650) 968-1786
	Jaymae Wentker	Fire Marshall Fire Department Email: jaymae.wentker@mountainview.gov	City of Mountain View 1000 Villa Street P. O. Box 7540 Mountain View, Ca 94041	(650) 903-6821	(650) 903-6122

Partner Agency	Name	Title	Address	Tel. No.	Fax No.
City of Los Altos Main Tel. 947-2700 Main Fax. 947-2731	Susanna Chan	Director of Public Works Email: schan@losaltos.ca.gov	City of Los Altos 1 N. San Antonio Road Los Altos, Ca 94022-3087	(650) 947-2621	(650) 947-2732
	Chris Lamm	Engineering Services Manager Email: clamm@losaltosca.gov	City of Los Altos 1 N. San Antonio Road Los Altos, Ca 94022	(650) 947-2624	(650) 947-2732
	Kim Juran-Karafeorgiou	Administrative Services Director Email: kjuran@losaltosca.gov	City of Los Altos 1 N. San Antonio Road Los Altos, Ca 94022	(650) 947-2836	(650) 947-2731
Stanford	Marty Laporte	Manager, Water & Environmental Quality Email: martyl@bonair.stanford.edu	Stanford University Utilities Division 327 Bonair Siding MS-7270 Stanford, Ca 94305-7270	(650) 725-7864 Katherine 723-4221	(650) 723-3191
	Bob Hockey	Infrastructure Manager	Stanford University Utilities Division 327 Bonair Siding MS-7270 Stanford, Ca 94305-7270	(650) 725-3401	(650) 723-3191

Partner Agency	Name	Title	Address	Tel. No.	Fax No.
Town of Los Altos Hills Main Tel. 941-7222	Richard Chiu	Public Works Director / City Engineer Email: rchiu@losaltoshills.ca.gov	Town of Los Altos Hills 26379 Fremont Road Los Altos Hills, Ca 94022	(650) 947-2516	(650) 941-3160
	Tina Tseng	Public Works Senior Engineer Email: ttseng@losaltoshills.ca.gov	Town of Los Altos Hills 26379 Fremont Road Los Altos Hills, Ca 94022	(650) 947-2511	(650) 941-3160
East Palo Alto Sanitary District Main Tel. 325-9021	Kenneth Jones	General Manager Email: kjones@epasd.com Tiana Thompson – Admin Email: tthompson@epasd.com	East Palo Alto Sanitary Dist 901 Weeks Street P.O. Box 51686 East Palo Alto, Ca 94303	(650) 325-9021	(650) 325-5173
	Karen Maxey	Administrative Services Director Email: klmaxey@epasd.com	East Palo Alto Sanitary Dist 901 Weeks Street P.O. Box 51686 East Palo Alto, Ca 94303	(650) 325-9021	(650) 325-5173

Partner Agency	Name	Title	Address	Tel. No.	Fax No.
Palo Alto	Rick Wetzel	Manager Regional Water Quality Control Plant	City of Palo Alto 2501 Embarcadero Way Palo Alto, Ca 94303	(650) 329-2243	(650) 494-3531
	Jamie Allen	Senior Engineer Regional Water Quality Control Plant	City of Palo Alto 2501 Embarcadero Way Palo Alto, Ca 94303	(650) 617-3130	(650) 856-0196
	Phil Bobel	Manager, Environmental Compliance Email: Phil.Bobel@cityofpaloalto.org	City of Palo Alto 2501 Embarcadero Way Palo Alto, Ca 94303	(650) 329-2285	(650) 494-3531
	Mike Sartor	Director of Public Works Email: Mike.Sartor@cityofpaloalto.org	City of Palo Alto 250 Hamilton Ave, Sixth Floor P.O. Box 10250 Palo Alto, Ca 94301	(650) 329-2270	(650) 329-2299
	Valerie Fong	Director of Utilities Email: Valerie.Fong@cityofpaloalto.org	City of Palo Alto 250 Hamilton Ave, Third Floor P.O. Box 10250 Palo Alto, Ca 94301	(650) 329-2277 Jennie Castelino X2273	
	Roger Cwiak	Engineering Mgr – Water-Gas-Wastewater Utilities Department	City of Palo Alto 1007 Elwell Court Palo Alto, Ca 94303	(650) 566-4507	(650) 566-4536
	Larry Hartmann	Staff Accountant	City of Palo Alto 250 Hamilton Ave, Fourth Flr P.O. Box 10250 Palo Alto, Ca 94301	(650) 329-2132	(650) 323-8356
	Mimi Nguyen	Senior Accountant	City of Palo Alto 250 Hamilton Ave, Fourth Flr P.O. Box 10250 Palo Alto, Ca 94301	(650) 329-2374	(650) 323-8356